OWL-M30

PARACHUTE PROTECTION SYSTEM FOR

MATRICE 30

Flyfire.

WWW.XFLYFIRE.COM

MATRICE 30 / 30T

FOREWORD

Thank you for choosing the parachute of Flyfire Technology that adapts to UAV M30. To facilitate your skillful use, Flyfire provides you with a user's guide. Please read this guide carefully before use and take good care of it for reference.

Flyfire reserves the right to revise, change or translate the user's guide without prior notice. Therefore, we recommend that you visit our website WWW.XFLYFIRE.COM at any time to access the latest information.

PLEASE READ THIS INSTRUCTION MANUAL CAREFULLY BEFORE USING THE PRODUCT AND KEEP IT PROPERLY

FCC WARNING

This device complies with part 15 of the FCC Rules. Operation is subject to the following two conditions: (1) This device may not cause harmful interference, and (2) this device must accept any interference received, including interference that may cause undesired operation.

NOTE 1: This equipment has been tested and found to comply with the limits for a Class B digital device, pursuant to part 15 of the FCC Rules. These limits are designed to provide reasonable protection against harmful interference in a residential installation. This equipment generates, uses and can radiate radio frequency energy and, if not installed and used in accordance with the instructions, may cause harmful interference to radio communications. However, there is no guarantee that interference will not occur in a particular installation. If this equipment does cause harmful interference to radio or television reception, which can be determined by turning the equipment off andon, the user is encouraged to try to correct the interference by one or more of the following measures:

—Reorient or relocate the receiving antenna.

—Increase the separation between the equipment and receiver.

—Connect the equipment into an outlet on a circuit different from that to which the receiver is connected.

—Consult the dealer or an experienced radio/TV technician for help.

NOTE 2: Any changes or modifications not expressly approved by the party responsiblefor compliance could void the user’s authority to operate the equipment.

IC WARNING

This device contains licence-exempt transmitter(s)/receiver(s) that comply with Innovation, Science and Economic Development Canada’s licence-exempt RSS(s). Operation is subject to the following two conditions:

(1) This device may not cause interference.

(2) This device must accept any interference, including interference that may cause undesired operation of the device.

Le présent appareil est conforme aux CNR d'Industrie Canada applicables aux appareils radio exempts de licence. L'exploitation est autorisée aux deux conditions suivantes: (1) l'appareil ne doit pas produire de brouillage, et (2) l'utilisateur de l'appareil doit accepter tout brouillage radioélectrique subi, même si le brouillage est susceptible d'en compromettre le fonctionnement.

PLEASE READ THIS GUIDE CAREFULLY AND KEEP IT CAREFULLY BEFORE USING THE PRODUCT.

DEAR CUSTOMERS:

OWL-M30 is a safe parachute system developed by Flyfire Technology to fit the UAV DJI- M30 RTK. If you have any questions about the product during the usage, please send an email to support@ido-future.com and we will solve it for you as soon as possible.

SAFETY PRECAUTIONS:

Please read this guide carefully before use, the OWL-M30 related parts are in compliance with DOT and the regulations in Standard for Transport of Lithium Batteries by Air ①, please use it in the correct way. This guide records the important contents. To avoid personal injury or property loss caused by misuse to you and others, so as to use the product safely and correctly, please take good care of this guide so that users of the product can read it at any time.

⚠ Attention: if you do not follow the correct instructions or operate it improperly, it may cause product damage and personnel injury.

⚠ Warning: if you do not follow the correct instructions or operate it improperly, it may cause casualties.

1： It is forbidden to aim the OWL-M30 parachute at human body at any time.
2： Do not disassemble the enclosure without authorization. If you disassemble it yourself, the parachute will be locked, and contact the dealer to unlock it. Before it is unlocked, any function of the parachute cannot be used.
3：Please use official accessories for installation, and follow the installation steps in the guide. For assembly details and precautions, please refer to the user's guide (installation part).
4：Please strictly follow the operating specifications of DJI UAV and do not use unofficially certified accessories in conjunction with the parachute.
5： When the product is not in use, put it back into the seal box to ensure that the storage environment will not be affected with damp or squeezed. It is strictly forbidden to place heavy objects on the parachute to avoid component damage or other failures due to the above-mentioned factors.
6：Do not place the product in a heating device, fire source or expose it to extremely high/low temperature for a long time e.g., an airtight carriage in summer or extremely cold snow may cause damage or failure of parts.
7：During the course of use, any damage to the parts needs to be checked and evaluated. Please contact the dealer in time after the parachute opens, and do not disassemble and repair it without authorization.

8：The product is only suitable for emergency landing of DJI-M30. We will not be held responsible for any accident if you use this product on other UAV types.
9：The minimum parachute-opening height of the product is 23m ②. Lower height may cause the parachute not to be unfolded in time, and the company is not responsible for the loss incurred.
10：The product is not suitable for users under 18 years old.
11：Do not transport it violently and store it properly.

WARNINGS

1：Non-professionals are strictly prohibited from testing the parachute-opening on the ground.
2：Under no circumstances should the parachute be pointed at the human body.
3：Due to the injury kinetic energy in the launch direction of the parachute, the counter-acting force may damage the UAV, so it is not recommended to carry out the ground parachute-opening test on the UAV.
4：The product contains lithium battery, so do not store the product in a wet or high temperature environment, otherwise it may cause battery leakage or fire. Please transport and store it properly.
5： It is forbidden to disassemble, repair or modify the parachute, otherwise the product will not be guaranteed.
6：Do not forcibly open the enclosure. If you disassemble the cabin by yourself, the parachute will be locked, and contact the dealer to unlock it.
7：Please consult the local laws and regulations of UAV before flying, and it is forbidden to fly it in crowded or complex electromagnetic environments. For the safety of the life and property of you and others, please abide by the flight rules.

WARRANTY SERVICE RULES

1.Dear users, thank you for purchasing our products. With this card and valid invoice or other valid warranty vouchers, users will enjoy the repair, replacement and refund services provided by the authorized service stores (hereinafter referred to as “Service outlets”) in accordance with the relevant national laws and regulations (hereinafter referred to as “Warranty service”).
2. If a product quality problem arises within 7 days from the purchase of the machine, the consumer can choose to refund the payment at one time according to the invoice price or replace the product with the same model and specifications for a claim of sales return for no reason within 7 days. Please ensure

that the product package is intact and the accessories are complete, that there are no stains and obvious traces of use in the product itself and in the packaging.
3.Within 15 days of purchasing the machine, if any quality problems arise, consumers can return to the service outlets for troubleshooting or replace a brand-new product of the same model and specifications.
4.If the product performance failure is caused by nan-human-made damage during the warranty period, you can enjoy the warranty service.
5.The term of product warranty is one year.
6.This user's guide will not be reissued once it is lost. Please take good care of it. If necessary, you can download the electronic version from our official website.
7.This guide does not bear any liability, including but not limited to, occasional or consequential damage or expected loss of benefits or profits, work suspension or damage caused by the use or inability to use the product.
8.The replaced parts in the service outlets will not be returned to user ③.

EXCEPTIONS TO THE WARRANTY SERVICE RULES

1. Inability to present warranty card and invoice or other valid warranty vouchers.
2. Signs of alteration are present in the warranty card or the product does not match the information in the warranty card.
3. Normal use, wear and aging of lossy materials during the use of products.
4. Self-disassembly or disassembly, modification and maintenance by a third party that is not certified by Flyfire Technology.
5. Damage caused by failure to use, maintain and store in strict accordance with the requirements of the user's guide.
6. Damage caused by force majeure such as flood, lightning, fire, etc.
7. Other failures and damage caused by non-product design, technology, manufacturing, quality, etc.
8. Beyond the warranty service period.

HEADQUARTERS OF AFTER-SALES SERVICE OUTLETS:

* Technical service center of Flyfire Technology: Building C, Ecological Park, Songshan Lake Park, Shipai Town, Dongguan City, China

Contents

Safety Precautions	05
Warranty Rules	06
After-sales Outlets	07
Get to Know the Parachute.	09
Installation Guider	10
Safe Start	13
Automatic Parachute-opening Mode	14
Parachute Cabin Pilot Lamp	15
Pilot Lamp of Remote Control Unit	16
Ground Parachute-opening (it is strictly forbidden to use it privately)Match	19
of the Remote Control and Parachute Cabin	20
Firmware Upgrade	21
Transportation and Storage	22
Specification and Parameters	23
Note	24
Packing List	26

1.GET TO KNOW YOUR PARACHUTE

When opening the parachute package, please check to make sure that it contains the following parts. If you find that parts are missing, please contact the dealer immediately.

OWL-M30 is a parachute protection system developed by Flyfire technology, which is suitable for DJI-M30 RTK UAV. Strong performance. It is connected to DJI UAV control through PSDK to realize two-way communication. OWL-M30 parachute redundant sensor design, with a minimum switching time of 0.5 seconds to reduce hidden dangers. Immediately stop the propeller and open the parachute, landding speed at 4.6m/s, protect the property safety of your UAV and ground personnel

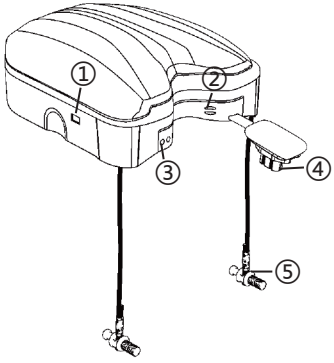

OWL-M30 parachute

Hanger screw X8

Clasp screw X4

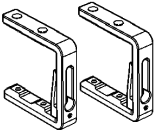

C-shaped hanger X2

Guider amd warranty card

Screw key for the hanger

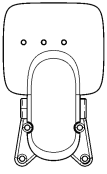

RC

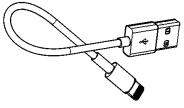

RC data line

Accessories optional

1.24V peripheral interface for the parachute

2.Buzzer loudspeaker

3.Parachute pilot lamp

4.PSDK connection cable

5.Fixation locking head for the parachute cord

2.NSTALLATION GUIDE

Quick installation guide.

⚠ 1: Take the clasp screw (X4) from the package and tighten it to the load mounting screw hole site at the back of M30 UAV.
2: Remove the four set screws on each side of the M30 arm, replace with the parachute hanger screw (X8) and install the C-shaped hanger.

①: Install the clasp screw and tighten it to the load screw hole site at the back of DJI M30.

https://www.youtube.com/c/FlyfireTechnology
Search the official YouTube account to see more latest videos

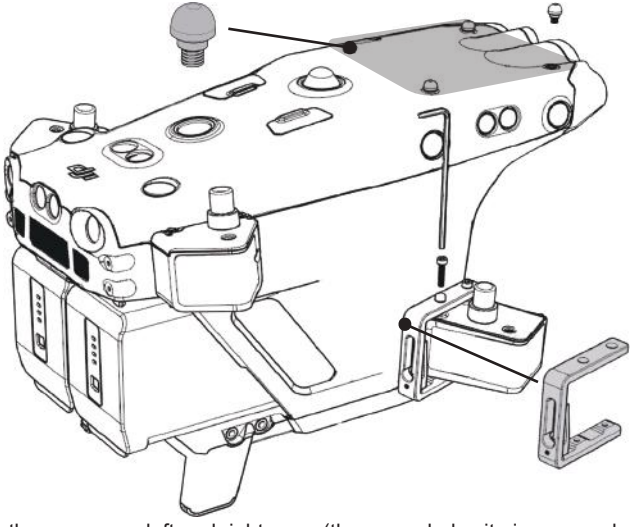

②: Remove the screws on left and right arms (the screw hole site is removed as shown above), take out the parachute C-shaped hanger, and use the parachute hanger screw (x8) to replace the original UAV screws for hanger mounting. (⚠ Take good care of the original UAV arm screws)

3: Take out the parachute and connect the parachute data line to the PSDK port on the UAV. The parachute data line interface is consistent with the PSDK port and is waterproof after correct installation. Please pay attention to whether the parachute is installed in place when connecting, otherwise the parachute may be offline or the UAV will not be waterproof. (be careful with distinguishing the correct port!)

4: For parachute installation, the four clasp positions at the bottom of the parachute correspond to the four clasp screws at the top. Please clasp them at the right position, install the parachute in place, and check if it is loose!

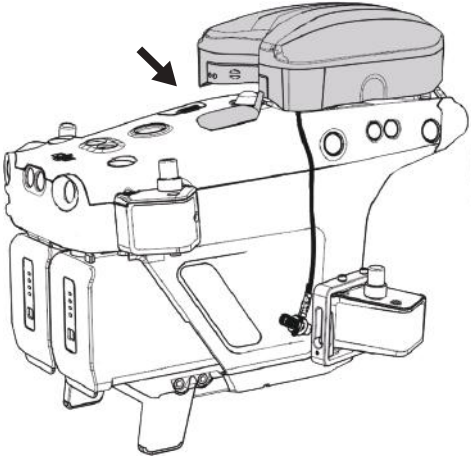

③: Plug the parachute data line into the PSDK port and check whether the installation is secure.

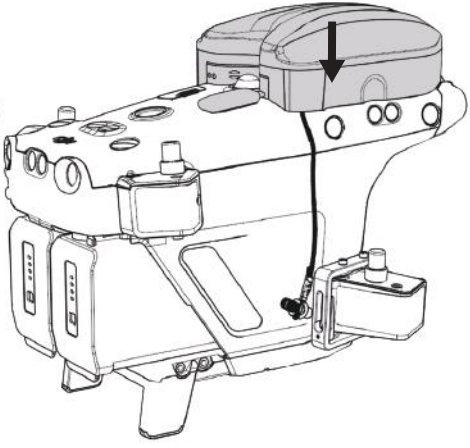

④: Take out the parachute and clasp it into the back of the UAV with the clasp screws installed. Attention! During installation, you need to clamp the parachute with a little effort. (normal clamping will not damage the aircraft and parachute)

+86 0769-8180-0402 Copyright 2022 Flyfire Corporation

5: Install the fixation locking head of parachute cord to the C-shaped hanger of M30 left and right arms, and lock it upward to check whether it is installed in place.

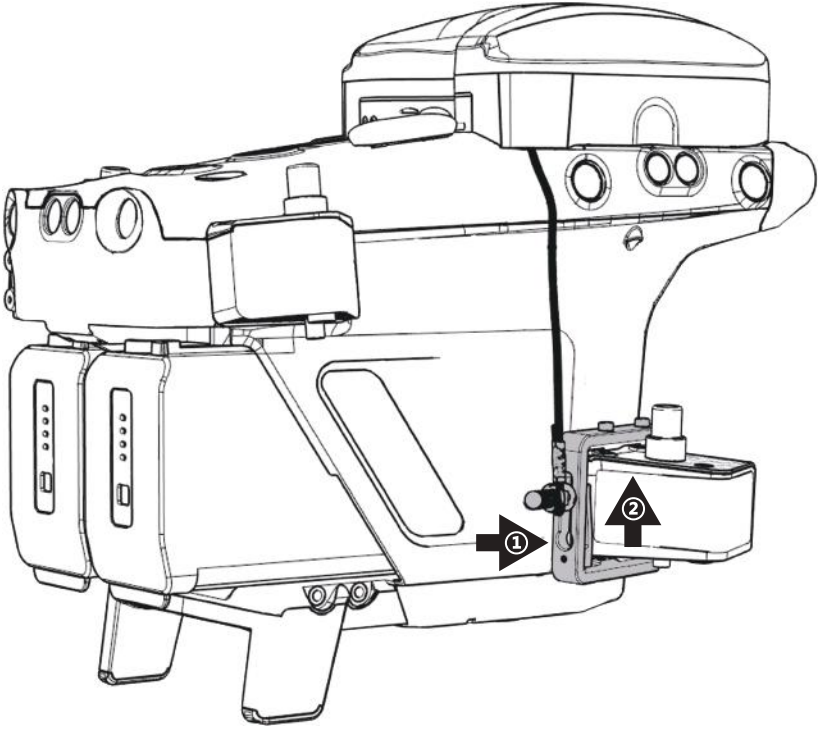

⑤: Install the fixation locking head in the C-shaped hanger and push it upward for locking

6:So far, all the installation steps have been completed. Start your DJI M30, when the parachute starts automatically, and the PSDK port of your M30 remote control unit will show “FLYFIRE PARACHUTE” connected.

3.SAFE START

Quick use guide.

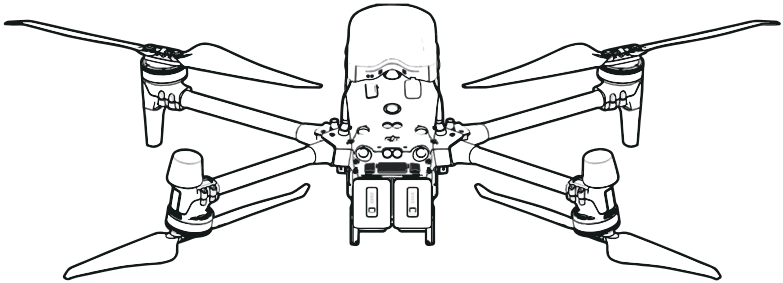

1：Make sure to install the UAV parachute according to the installation process.

2：Start DJI M30, the parachute starts automatically, and the pilot lamp is always green, indicating that the parachute functions normally.

3：Check whether the PSDK window of the UAV remote control unit displays “FLYFIRE PARACHUTE”, which indicates that the parachute load has been connected to the UAV.

4：The parachute has entered the state of ready for take-off, please operate in strict accordance with the flight specifications of DJI UAV.

+86 0769-8180-0402 Copyright 2022 Flyfire Corporation

4. AUTOMATIC PARACHUTE-OPENING MODE

1: AUTOMATIC PARACHUTE-OPENING MODE

When the UAV crashes out of control due to a variety of unexpected accidents, the parachute can automatically trigger the parachute to open.

AUTOMATIC PARACHUTE SYSTEM

Automatic parachute system of Flyfire (APS) ④

2: REMOTE CONTROL OF PARACHUTE-OPENING MODE

In the event of an out-of-control crash of the UAV, double-click the left and right buttons of the remote control unit immediately, and the UAV operator can bypass the program to open the parachute manually. (Note: ensure that the UAV is at an altitude of more than 10m ⑤)

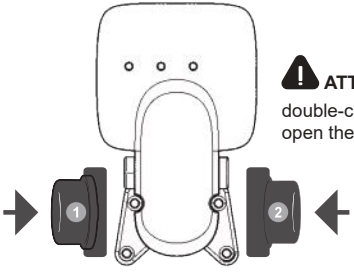

ATTENTION:

double-click the left button ❶ and right button ❷ quickly to open the parachute in the air via the remote control unit.

Note: the manual parachute-opening mode of the UAV is invalid when the ground or lift-off does not reach the height of over 10 meters. At this time, double-click the left and right buttons, it will be regarded as invalid command by the parachute and it gives an alarm. If you need to stop the alarm, click the left button ❶.

5. PARACHUTE PILOT LAMP

Judge the state of the parachute by the lamp color.

1.GET TO KNOW YOUR PARACHUTE

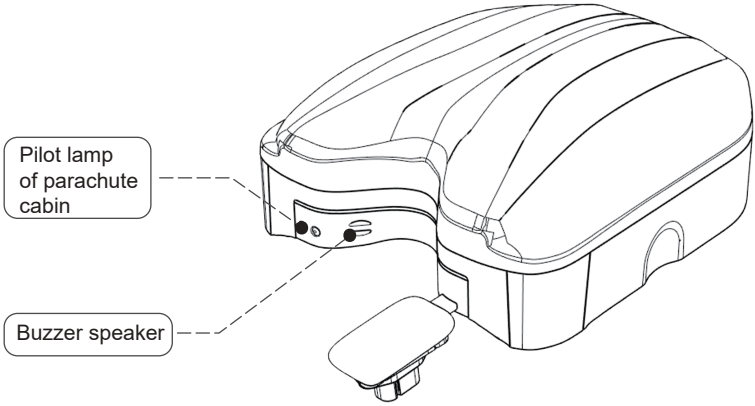

○○

GREEN LAMP IS ON

Parachute self-test is normal

●○

GREEN LAMP FLASHES

The altitude of the UAV is being pulled up

○○

PURPLE LAMP IS ON

Parachute alert state

●○

PURPLE LAMP FLASHES

Ground parachute-opening test mode

○○

YELLOW LAMP IS ON

The parachute cannot be connected to the drone

●○

YELLOW LAMP FLASHES

The parachute is self-checking

○○

RED LAMP IS ON

Parachute equipment failure

●○

RED LAMP FLASHES

The parachute has opened

5.PARACHUTE PILOT LAMP

Judge the parachute state by the lamp color

○○

CYAN LAMP IS ON

The remote control unit has been matched with the parachute.

●○

CYAN LAMP FLASHES

The remote control unit is matching with the parachute cabin

○○

BLUE LAMP IS ON

Connected to the computer

●○

BLUE LAMP FLASHES

Parachute data transmission

○○

WHITE LAMP IS ON

Parachute enters firmware upgrade mode

●○

WHITE LAMP FLASHES

Parachute firmware upgrading

6. PILOT LAMP OF THE REMOTE CONTROL UNIT

The state of the parachute is judged by the light color.

1. GET TO KNOW YOUR REMOTE CONTROL UNIT

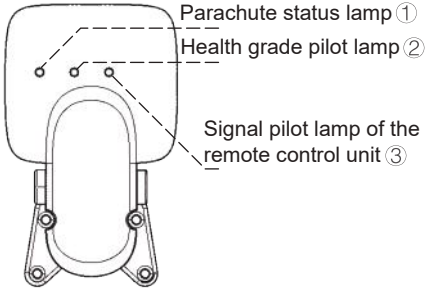

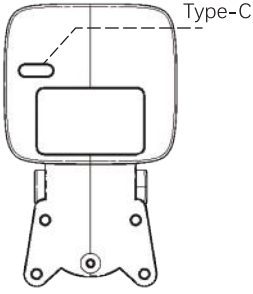

PARACHUTE STATUS LAMP ①

●○

YELLOW LAMP FLASHES

The parachute is self-checking

●○

GREEN LAMP FLASHES

The altitude of the UAV is being pulled up

●○

PURPLE LAMP FLASHES

Ground parachute-opening test mode

●○

RED LAMP FLASHES

The parachute has opened

●○

CYAN LAMP FLASHES

The remote control unit is matching with the parachute

●○

BLUE LAMP FLASHES

Parachute data transmission

●○

WHITE LAMP FLASHES

Parachute firmware upgrading

○○

YELLOW LAMP ON

The parachute cannot be connected to the drone

○○

GREEN LAMP ON

normal

○○

PURPLE LAMP ON

Parachute alert state

○○

RED LAMP ON

Parachute equipment failure

○○

CYAN BLUE LAMP ON

The remote control has been matched with the parachute

○○

BLUE LAMP ON

Connected to the computer

○○

WHITE LAMP ON

Parachute enters firmware upgrade mode

HEALTH GRADE PILOT LAMP ②

○○

GREEN LAMP ON

The attitude of the drone is normal and it in a safe state

○○

YELLOW LAMP ON

The attitude of the drone is abnormal and it is in a dangerous state

○○

RED LAMP ON

The attitude of the drone is out of control and the command of dead stick and to open parachute has been executed.

●○

WHITE LAMP FLASHES

Firmware upgrading of the remote control unit

●○

THE LAMP GOES OFF

The remote control unit is disconnected from the parachute

SIGNAL PILOT LAMP OF THE REMOTE CONTROL UNIT ③

●○

LIGHT BLUE LAMP FLASHES

The remote control unit is matching with the parachute

○○

LIGHT BLUE LAMP ON

The parachute has been matched with the remote control unit

●○

WHITE LAMP FLASHES

Firmware upgrading of the remote control unit

○○

WHITE LAMP ON

Firmware upgrade of the remote control unit has been completed

○○

GREEN LAMP ON

The signal transmission between the remote control unit and the parachute is normal

○○

YELLOW LAMP ON

The remote control signal can be connected to the parachute, but it is too far away or interfere is too much

○○

RED LAMP ON

The parachute signal has been disconnected and the remote control unit beeps once

7. GROUND PARACHUTE-OPENING MODE (Contact Flyfire before use, otherwise you will bear all the consequences.)

It is used to check the parachute-opening parameters.

WARNINGS

THIS MODEL HAS A CERTAIN RISK COEFFICIENT, AND NON-PROFESSIONALS ARE STRICTLY PROHIBITED TO OPERATE!

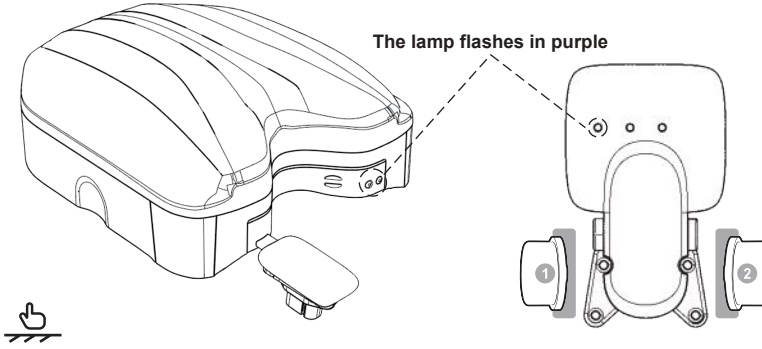

GROUND PARACHUTE-OPENING MODE STEPS. PLEASE DO NOT CARRY IT ON THE UAV FOR THIS TEST.

1: Fix the parachute and turn the UAV on, while the personnel evacuate to 10 meters away, the line of sight is facing the parachute pilot lamp. Press the right button ② of the remote control unit for ten times in a row, when the parachute cabin lamp turns purple, and the remote control unit lamp ① also flashes in purple, indicating that the parachute has entered the ground opening mode; (Attention : click the remote control unit button ① at this time to quite the ground opening mode)

2: Ensure the safety around the test site, and double-click the remote control unit buttons ① and button ② to open the parachute. After the parachute-opening command is completed, immediately turn off the power supply of the parachute (remove the PSDK cable). At this time, the parachute alarm is clear.

3: The ground parachute-opening test is over; please contact the after-sales service of Flyfire Technology or your dealer to replace the worn parts.

8. THE REMOTE CONTROL UNIT IS MATCHING WITH THE PARACHUTE CABIN

When you choose the remote control unit or use multiple parachutes in the same area, please connect each parachute to the remote control unit in a different frequency band!

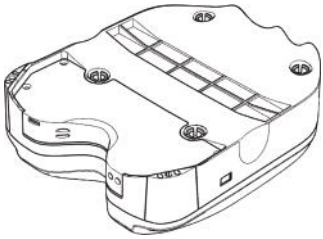

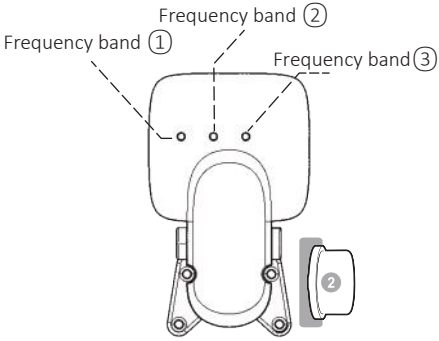

MATCHING STEPS:

1: Press the right button ② of the remote control unit for 10 seconds, light blue light of the remote control unit band 3 is on, and click the right button ② of the remote control unit to switch the frequency band, and wait 2 seconds after selecting the frequency band, the lamp of this frequency band turns light blue and flashes; (the remote control unit has selected this frequency band and is ready to match with the parachute)

2: Place OWL-M30 parachute upside down, connect the data line of the parachute cabin to the PSDK port of the UAV, start the aircraft, and the lamp of the parachute cabin changes to flashing in light blue; (at this time, the parachute cabin is ready, being connected, and to match the remote control unit)

3: The parachute cabin and the remote control unit beep once respectively, and the pilot lamp turns light blue and on, when matching has been completed.

4: Disconnect the parachute data line, quit the matching mode, and follow the steps to install your OWL-M30 parachute.

After the matching, you need to restart the parachute cabin. You only need to unplug and plug the parachute data or restart M30 to quit the matching mode.

9. FIRMWARE UPGRADE

Please visit WWW.XFLYFIRE.COM from time to time to ensure that the product firmware is up-to-date for a better experience.

https://www.youtube.com/c/FlyfireTechnology

Search the official YouTube account to see more latest videos

1: Go to the official website of Flyfire Technology: WWW.XFLYFIRE.COM, enter the “download” page in the navigation bar, and select the latest firmware to download to your local hard drive.

2: Power the OWL-M30 remote control unit (if there is no remote control board, ignore the upgrade step), connect the parachute to the computer with a Type-C line, and check whether the signal connection between the remote control unit and the parachute is proper.

3: At this time, the computer will display a new U disk access, name the matching latest firmware file downloaded from the official website as: owl-fw.bin and drag it into the USB root directory of parachute.

4: Wait for the parachute to synchronize the firmware with the remote control unit and upgrade automatically after the transmission. Do not disconnect the power supply of the parachute and the remote control unit during the upgrade. (the remote control unit and parachute lamps are flashing in white during firmware upgrade.)

5: After the remote control unit and parachute pilot lamp turns to white and on, the firmware upgrade is finished. At this time, the remote control unit lamp changes to green color, the parachute lamp shows always blue color, indicating the connected mode of USB. (the power can be disconnected at this time.)

To ensure that the firmware upgrade of the remote control unit is smooth, make sure that your parachute and the remote control unit have been matched and connected properly before the firmware upgrade.

Do not disconnect the power to the parachute and the remote control unit during the upgrade process, and keep the parachute and the remote control unit within the range of 10 meters, otherwise the upgrade may fail. After the firmware upgrade is completed, the remote control unit lamp is always green, and the parachute displays blue and is on, entering the USB mode, which indicates that the upgrade is successful.

10. TRANSPORTATION AND STORAGE

Please keep it in a sealed and clean environment when it is not in use for a long time!

ATTENTION

1. Keep your parachute up during transportation.
2. Do not place heavy objects above the OWL-M30 parachute cabin, or it may cause breakage to the enclosure.
3. Keep it in a sealed box when it is not in use for a long time.
4. If sediment is attached to the surface of the parachute after use, wipe it with alcohol and cotton cloth.
5. Do not disassemble the parachute by yourself, or it will cause the parachute to lock by itself.

Refer to this user's guide in case of any questions or doubts.
We will email to inform you of the application program update and latest version number.
For more details, consult the website below:

HTTP：//WWW.XFLYFIRE.COM

11. SPECIFICATION AND PARAMETERS

DESIGNED BY FLYFIRE

PARACHUTE PARAMETERS:

MODEL：OWL-M30

ADAPTABLE MODEL：DJI-M30

MAXIMUM LOAD：≤4.5kg

SIZE OF THE PARACHUTE CABIN：130X106X45mm

AREA OF PARACHUTE FABRIC：2.25m^2

SYSTEM WEIGHT：280g

TYPE OF PARACHUTE：SQUARE PARACHUTE

RESPONSE TIME：500ms~600ms

RESPONSE DISTANCE：8~15m

LOWEST PARACHUTE-OPENING HEIGHT：23m

WORKING TEMPERATURE：-20°C~60°C

WORKING ALTITUDE：≤3500m

IP GRADE：IP45

CLASSIFICATION OF WIND RESISTANCE：≤7

PARACHUTE PARAMETERS:

MASS：235g

SIZE：132X130X45mm

TYPE OF PARACHUTE：SQUARE PARACHUTE

INGREDIENT：NYLON

TECHNICAL STANDARD：FZ66201-1995

WEIGHT OF PARACHUTE FABRIC：112g

PERMEATION VOLUME：≤20.0L/M^2.S

THE FALLING VELOCITY OF MATRICE 30 CARRYING OWL IS 4.6M/S ⑥ IN THE PARACHUTE-OPENING TEST.

NOTES:

①: The gas generator meets the requirements of DOT (US Department of Transportation) UN 6 (d) test standard; the lithium battery meets the requirements of UN38.3 test report.;

②: 23m is the parachute minimum parachute-opening height officially recommended. Opening the parachute below 23 meters may lead to incomplete unfolding of the parachute fabric.

③: The parachute parts replaced by the service outlets will not be handed over to customers, and Flyfire will recycle it free of charge to reduce abandoned e-waste.

④: The Flyfire algorithm of dead stick and parachute-opening can automatically identify the flight accident and execute the intelligent algorithm of parachute control by integrating the information of motor speed, battery power, flight attitude, state and altitude.

⑤: The alert height is 10 meters, below which the automatic parachute-opening procedure and manual parachute-opening function are disabled.

⑥: This falling velocity is the average obtained in many tests. A slight deviation exists in different environments, and the actual situation shall prevail.

+86 0769-8180-0402 Copyright 2022 Flyfire Corporation

OWL-M30

PARACHUTE PROTECTION SYSTEM FOR MATRICE 30

Flyfire®

HTTP//WWW.XFLYFIRE.COM

Manufacturer: Flyfire Technology

Address: Technical service center of Flyfire Technology: Building C, Ecological Park, Songshan Lake Park, Shipai Town, Dongguan City, China

LIST OF ITEMS

Before using the product, please check whether the product package contains all of the following items. If there is anything missing, please contact Flyfire or your agent.

Hanger screw X8

Clasp screw X4

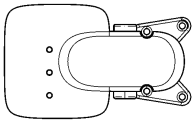

RC

Accessories optional

User's guide and warranty card

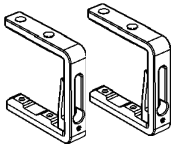

C-shaped hanger

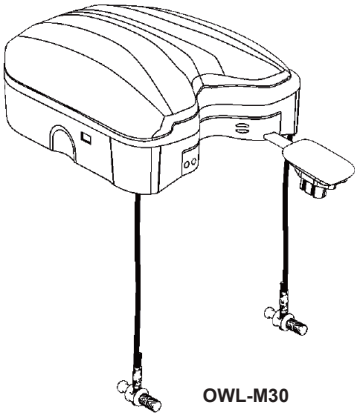

OWL-M30

Screw key for the hanger

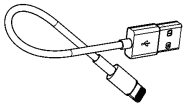

RC data line

Accessories optional

+86 0769-8180-0402 Copyright 2022 Flyfire Corporation

火萤公司
中国印刷

Flyfire.