ZS-GX1S

QUICK GUIDE

Security Camera

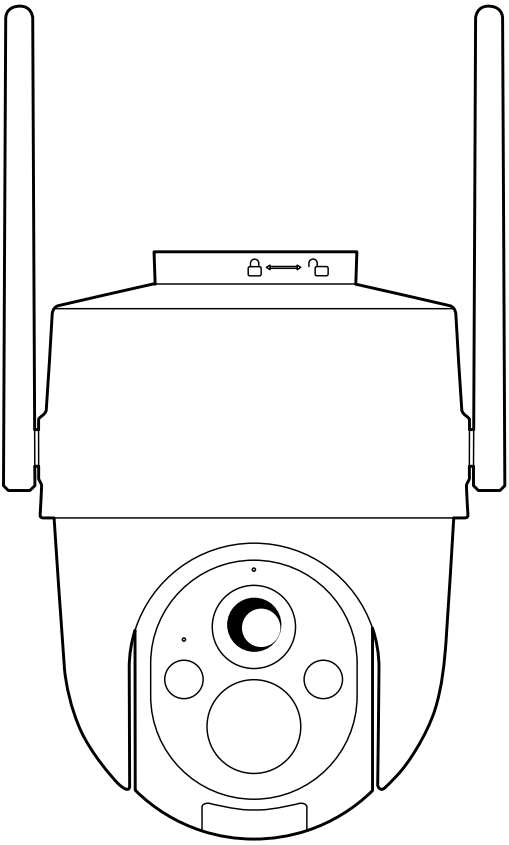

Quick start guide

1. Packing list
2. Product description
3. Installation
4. Product configuration
5. Specifications
6. Legal notice

1. Packing list

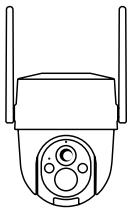
Camera X1

Screw package X1

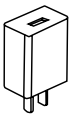
Power adapter X1

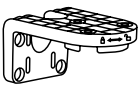
Bracket X1

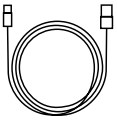
Power cable X1

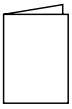
Quick guide X1

2. Product description

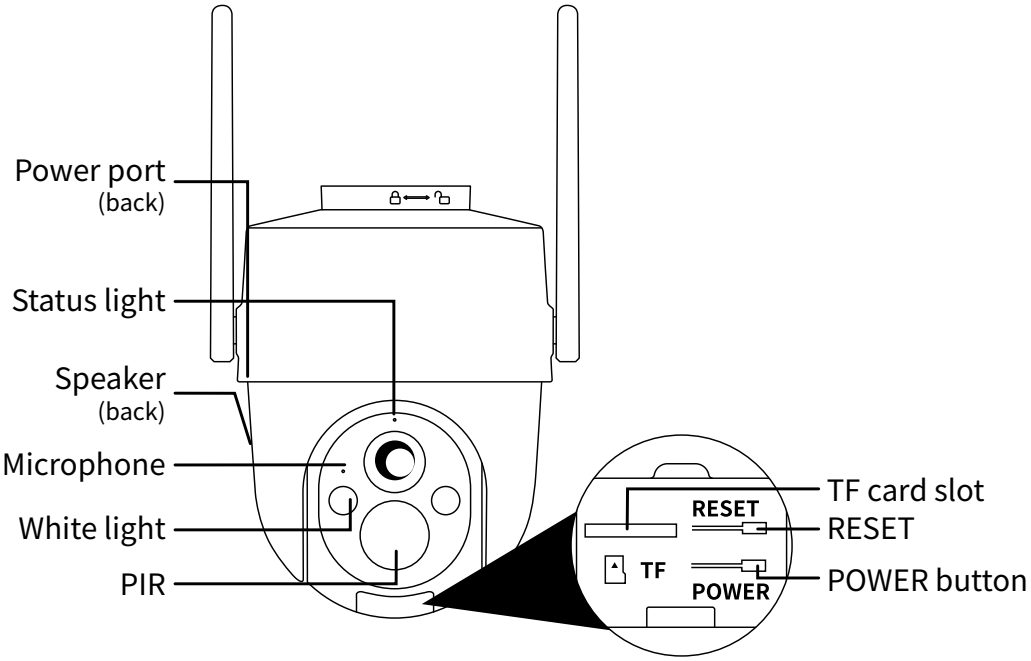

Status light	Description
Flashing red light (slow)	Wait for network configuration
Flashing red light (fast)	Connecting the network
Fixed red light	Network is malfunctional
Fixed blue light	Camera is working correctly

Note: To reset the device, press and hold the reset button for 5 seconds. The camera beeps when the operation is complete.

3. Installation

Note: Before installation, please make sure the installation position will not affect the connection and usage, espcially to ensure that the solar panel (sold separately) can be fully illuminated if you need.

Installation method 1: wall mounting

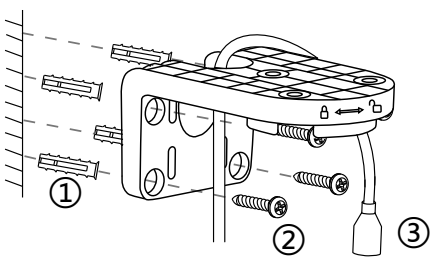

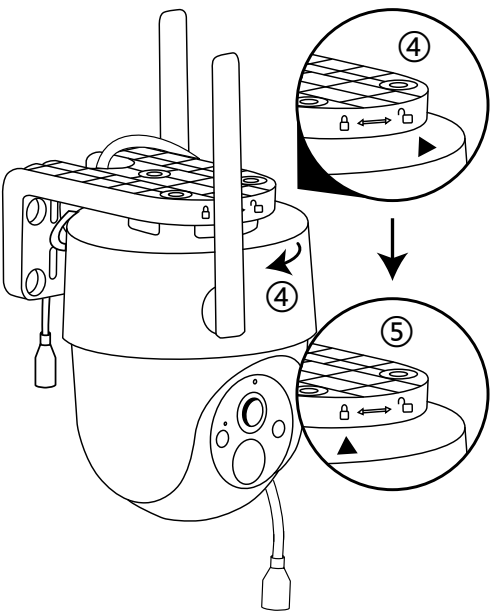

1/2. Install expansion screws and mounting screws.

3. Take camera power cable through the bracket.

4. Insert the camera into the bracket and point the camera black arrow at the bracket Unlock logo.

5. Rotate the camera until it snaps into the bracket with the black arrow pointing at the Lock logo.

Installation method 2: cell mounting

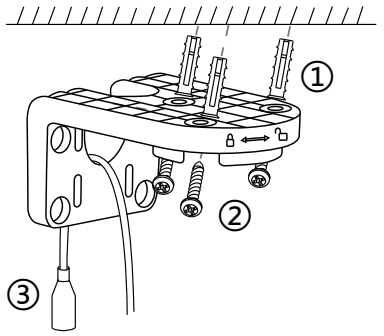

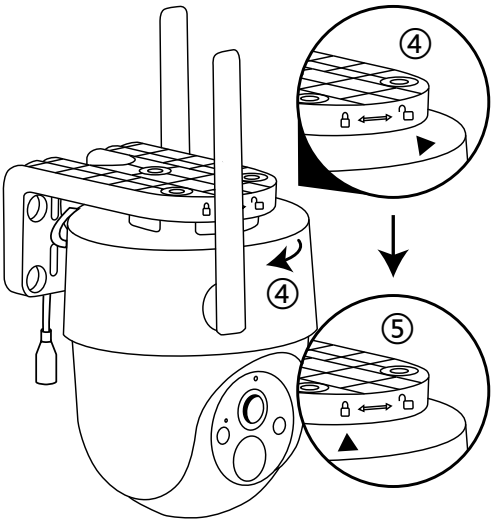

1/2. Install expansion screws and mounting screws.

3. Take camera power cable through the bracket.

4. Insert the camera into the bracket and point the camera black arrow at the bracket Unlock logo.

5. Rotate the camera until it snaps into the bracket with the black arrow pointing at the Lock logo.

4. Product configuration

Scan QR code to download and install the App. Or you can search on App Store (iOS) or Google Play (Android).

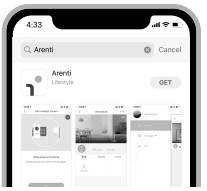

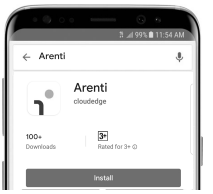

Download on the App Store

GET IT ON Google Play

Registration

Open the App. If you are a new user, tap to create a new account and follow the prompts to complete account setup.

Note: Before creating a new account, please read the Privacy Policy and Terms of Use carefully.

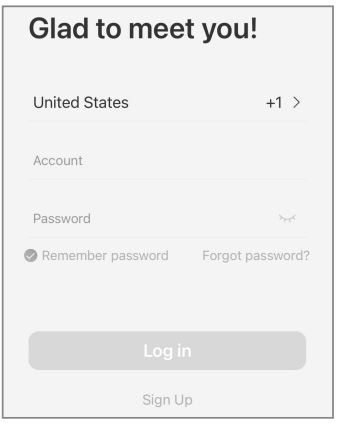

Powering on the device

Power on the camera. Status light flashing red indicates that the camera is ready for pairing.

Pairing method 1: pairing via QR code on device

Open App home page, click "+" >> "Scan Code", then scan the QR code pasted on the device casing with the App of your phone, and add the camera to the App.

Note: When pairing, please put the camera and phone close to the router. If camera is not in the red slow blinking after 30 seconds of powering on, press and hold the reset button for 5 seconds to reset, and then restart to pair the camera with the App.

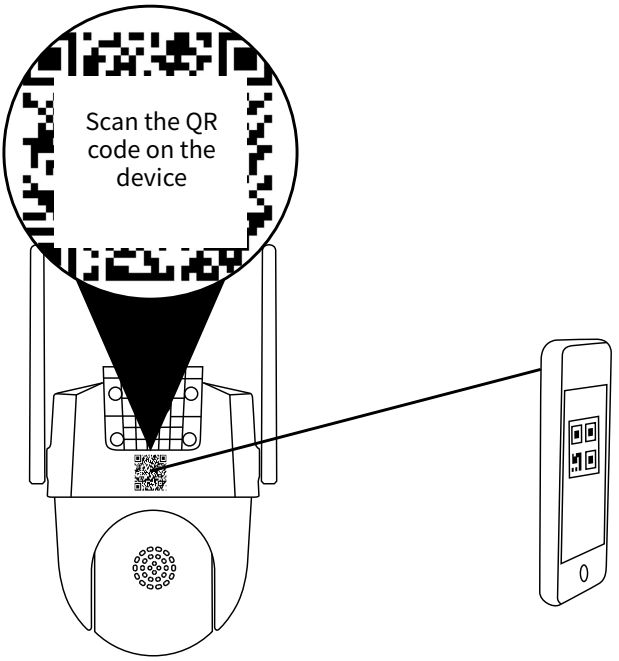

Pairing method 2: pairing via bluetooth

Turn on your phone's bluetooth.

Open App home page, click "+" >> "Add Device" or "Add", the device will be searched for by bluetooth and appears on the page. Click the device and follow the notes to pair the camera with App.

Pairing method 3: pairing via QR code on App

Open App home page, click "+" >> "Add Device" or "Add" and select icon according to actual camera.

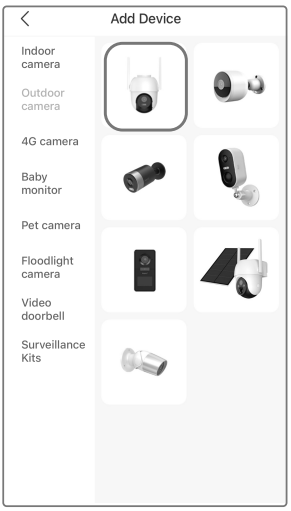

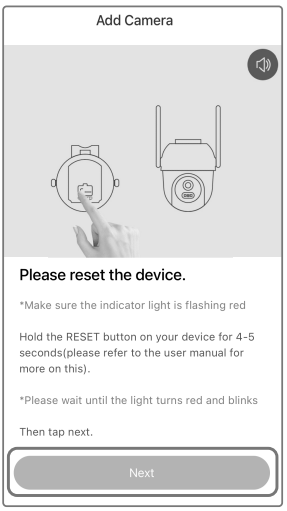

Select a fluent and steady Wi-Fi and input the password. Then, scan the QR code in the App on your camera.

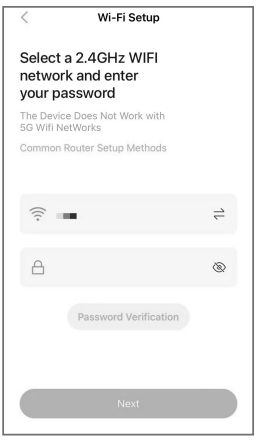

Click "Next" and use the camera to scan the QR code in the App on your mobile phone.

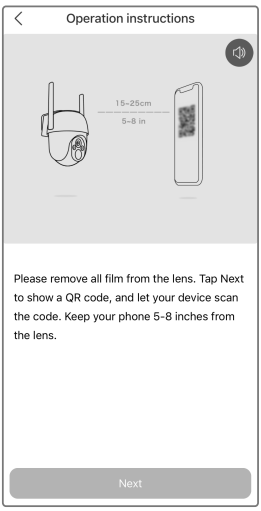

If no device is found and the pairing process is not successful, please check below instructions:

- **Make sure the camera is in pairing mode.**
- Ensure that the Wi-Fi network is set to 2.4GHz.
- Verify that the entered Wi-Fi password is correct and that the mobile device is connected to the same Wi-Fi network.
- Check for network activity on your Wi-Fi.

If none of the solutions works or you have any other problems,

Note: If you have multiple cameras, please follow steps again to add devices one by one. To change Wi-Fi network, please restore the camera to factory settings and follow steps to add the camera.

Functions

AOV (Alwasy on Video)

By utilizing the latest AOV tech, the battery camera allows for 24-hour recording and event recognition up to 30 meters, addressing the limitations of traditional low-power devices that do not record when there is no triggering event.

When no one is detected, the device captures video at a user-set frame rate, eliminating invalid frames to save up to 90% of power and storage space. When a person is detected, the device immediately switches to live recording.

5. Specifications

Product name	ZS-GX1S
Resolution	2592 x 1944
Angle of view	100°
IR Distance	Up to 10m
Working temp	-10°C to 50°C
Local storage	TF card (up to 256GB)
Power input	DC 5V / 1A
Consumption	Up to 4.5W
Supported phone OS	iOS 9/Android 5.0 or later
2.4GHz Wi-Fi	2412-2462MHz (Max. power<30dBm)
Bluetooth	2400-2483.5MHz (Max. power<20dBm)

6. Legal notice

Symbols ⎓ Direct current (DC)

Don't throw batteries or out of order products with the household waste (garbage). The dangerous substances that they are likely to include may harm health or the environment. Make your retailer take back the products or use selective collect of garbage proposed by your city.

Hereby, we declare that the radio equipment type '' is in compliance with the Directive 2014/53/EU. The full test of the EU declaration of conformity is available at the following Internet address: www.ctvzn.com

FCC Statement

This equipment has been tested and found to comply with the limits for a Class B digital device, pursuant to part 15 of the FCC Rules. These limits are designed to provide reasonable protection against harmful interference in a residential installation. This equipment generates, uses and can radiate radio frequency energy and, if not installed and used in accordance with the instructions, may cause harmful interference to radio communications. However, there is no guarantee that interference will not occur in a particular installation. If this equipment does cause harmful interference to radio or television reception, which can be determined by turning the equipment off and on, the user is encouraged to try to correct the interference by one or more of the following measures:

- Reorient or relocate the receiving antenna.
- Increase the separation between the equipment and receiver.
- Connect the equipment into an outlet on a circuit different from that to which the receiver is connected.
- Consult the dealer or an experienced radio/TV technician for help.

FCC Radiation Exposure Statement

This device complies with FCC radiation exposure limits set forth for an uncontrolled environment and it also complies with Part 15 of the FCC RF Rules. This equipment must be installed and operated in accordance with provided instructions and the antenna(s) used for this transmitter must be installed to provide a separation distance of at least 20 cm from all persons and must not be co-located or operating in conjunction with any other antenna or transmitter. End-users and installers must be provide with antenna installation instructions and consider removing the no-collocation statement.

This device complies with Part 15 of the FCC Rules. Operation is subject to the following two conditions: (1) this device may not cause harmful interference, and (2) this device must accept any interference received, including interference that may cause undesired operation.

Caution!

Any changes or modifications not expressly approved by the party responsible for compliance could void the user's authority to operate the equipment.

Industry Canada (ISED) Compliance Statement

This device complies with ISED's licence-exempt RSS(s).
Operation is subject to the following two conditions:
(1) This device may not cause interference; and
(2) This device must accept any interference, including interference that may cause undesired operation of the device.

Le présent appareil est conforme aux CNR d'ISED applicables aux appareils radio exempts de licence.L'exploitation est autorisée aux deux conditions suivantes :
(1) l'appareil ne doit pas produire de brouillage;
(2) l'utilisateur de l'appareil doit accepter tout brouillage radioélectrique subi, même si le brouillage est susceptibled’ en compromettre le fonctionnement.

The device meets the exemption from the routine evaluation limits in section 6.6 of RSS 102 and compliance with RSS-102 RF exposure, users can obtain Canadian information on RF exposure and compliance.

Le dispositif rencontre l'exemption des limites courantes d'évaluation dans la section 6.6 de RSS 102 et la conformité à l'exposition de RSS-102 rf, utilisateurs peut obtenir l'information canadienne sur l'exposition et la conformité de rf.

This transmitter must not be co-located or operating in conjunction with any other antenna or transmitter. This equipment should be installed a nd operated with a minimum distance of 20 centimeters between the radiator and your body.

Cet émetteur ne doit pas être Co-placé ou ne fonctionnant en même temps qu'aucune autre antenne ou émetteur. Cet équipement devrait être ins tallé et actionné avec une distance minimum de 20 centimètres entre le radiateur et votre corps.

Safety Information

Power Adapter Safety

- The power plug is intended to serve as a disconnect device.Do not drop or cause an impact to the power adapter.
- If the power cable is damaged (for example, the cord is exposed or broken), or the plug loosens,stop using it at once. Continued use may lead to electric shocks, short circuits, or fire.
- Do not touch the device or the power adapter with wet hands. Doing so may lead to short circuits, malfunctions, or electric shocks.

Child's safety

- Comply with all precautions with regard to child's safety. Letting children play with the device or its accessories may be dangerous.
- The device and its accessories are not intended for use by children. Children should only use the device with adult supervision.

Operation Requirements

- Use the device under allowed humidity and temperature conditions.
- Do not aim the device at strong light sources (such as lamplight, and sunlight) when focusing it, to avoid reducing the lifespan of the CMOS sensor, and causing overbrightness and flickering.
- Observe local laws and regulations, and respect the privacy and legal rights of others.

BATTERY SAFETY

- Your device contains a rechargeable lithium-ion battery and should be replaced only by a qualified service provider. Do not disassemble, open, crush, bend, deform, puncture, shred or attempt to access the battery in your device.
- Do not modify or remanufacture the battery, attempt to insert foreign objects into the battery, or immerse or expose it to water or other liquids, expose to fire, explosion or other hazard.
- DO NOT use a battery if its case appears damaged, swollen, or compromised. Examples include, but are not limited to, leaking, odors, dents, corrosion, rust, cracks, swelling, melting, and scratches.
- Do not put the battery in trash that is disposed of in landfills. When disposing of the battery, comply with local ordinances or regulations.

© 2024. All rights reserved. All trade names are registered trademarks of respective companies Apple, the Apple logo, iPhone are trademarks of Apple Inc. registered in the U.S. and other countries. Google, the Google logo, Android are trademarks of Google Inc. App Store is a service mark of Apple Inc. Google Play is a service mark of Google Inc.

V1.0 202405