TEST REPORT

FCC Part 27

Report Reference No.:	**HK2210314830-4E**
FCC ID :	2AZL7-ZY-G1
Compiled by (position+printed name+signature)..:	File administrators Gary Qian
Supervised by (position+printed name+signature)..:	Technique principal Eden Hu
Approved by (position+printed name+signature)..:	Manager Jason Zhou
Date of issue.....:	Nov. 11, 2022
Testing Laboratory Name .....:	**Shenzhen HUAK Testing Technology Co., Ltd.**
Address.....:	1-2/F., Building B2, Junfeng Zhongcheng Zhizao Innovation Park, Heping, Fuhai Street, Bao'an District, Shenzhen, Guangdong, China
Applicant's name.....:	**Shenzhen CTV Int Cloud Technology Co., Ltd**
Address.....:	601, B Building, No.10, East District, Shangxue Industrial City, Xinxue Community, Bantian Street, Shenzhen, China
Test specification ..... :	
Standard ..... :	**FCC Part 27**

Shenzhen HUAK Testing Technology Co., Ltd.All rights reserved.
This publication may be reproduced in whole or in part for non-commercial purposes as long as the Shenzhen HUAK Testing Technology Co., Ltd.as copyright owner and source of the material. Shenzhen HUAK Testing Technology Co., Ltd.takess no responsibility for and will not assume liability for damages resulting from the reader's interpretation of the reproduced material due to its placement and context.

Test item description .....:	4G Security Camera
Trade Mark .....:	N/A
Manufacturer.....:	**Shenzhen CTV Int Cloud Technology Co., Ltd**
Model/Type reference.....:	ZY-G1
Series Models .....:	ZY-G2, ZY-G3, ZY-G4, ZY-G5, ZY-G6, ZY-G7, ZY-G8, ZY-G9, ZS-GX1S, ZS-GX7S, ZS-GX8S, ZS-GX9S
Ratings.....:	DC 3.7V from battery or DC 5V from USB
Modulation .....:	QPSK, 16QAM
Hardware version .....:	V1.0
Software version .....:	V1.0
Frequency.....	LTE Band 12
Result.....:	**PASS**

TEST REPORT

Test Report No. :	HK2210314830-4E	Nov. 11, 2022 Date of issue

Equipment under Test	:	4G Security Camera
Model /Type	:	ZY-G1
Series Models	:	ZY-G2, ZY-G3, ZY-G4, ZY-G5, ZY-G6, ZY-G7, ZY-G8, ZY-G9, ZS-GX1S, ZS-GX7S, ZS-GX8S, ZS-GX9S
Applicant	:	**Shenzhen CTV Int Cloud Technology Co., Ltd**
Address	:	601, B Building, No.10, East District, Shangxue Industrial City, Xinxue Community, Bantian Street, Shenzhen, China
Manufacturer	:	**Shenzhen CTV Int Cloud Technology Co., Ltd**
Address	:	601, B Building, No.10, East District, Shangxue Industrial City, Xinxue Community, Bantian Street, Shenzhen, China

Test result	Pass

The test report merely corresponds to the test sample.
It is not permitted to copy extracts of these test result without the written permission of the test laboratory.

The results shown in this test report refer only to the sample(s) tested unless otherwise stated and the sample(s) are retained for 30 days only. The document is issued by HUAK, this document cannot be reproduced except in full with our prior written permission. The more details and the authenticity of the report will be confirmed at http://www.cer-mark.com.

Contents

1	SUMMARY	4
1.1	Test Standards	4
1.2	Test Description	4
1.3	Information of The Test Laboratory	5
1.4	Statement of The Measurement Uncertainty	5
2	GENERAL INFORMATION	6
2.1	Environmental Conditions	6
2.2	Description of Test Modes	6
2.3	Equipments Used During The Test	7
2.4	Modifications	7
3	TEST CONDITIONS AND RESULTS	8
3.1	Output Power	8
3.2	Peak-to-Average Ratio (PAR)	13
3.3	Occupied Bandwidth and Emission Bandwidth	18
3.4	Band Edge Compliance	23
3.5	Spurious Emission	28
3.6	Frequency Stability Under Temperature & Voltage Variations	59
4	TEST SETUP PHOTOS OF THE EUT	61
5	PHOTOS OF THE EUT	62

The results shown in this test report refer only to the sample(s) tested unless otherwise stated and the sample(s) are retained for 30 days only. The document is issued by HUAK, this document cannot be reproduced except in full with our prior written permission. The more details and the authenticity of the report will be confirmed at http://www.cer-mark.com.

TEL : +86-755 2302 9901 FAX : +86-755 2302 9901 E-mail : service@cer-mark.com
Add: 1-2F., Building B2, Junfeng Zhongcheng Zhizao Innovation Park, Heping Community, Fuhai Street, Bao'an District, Shenzhen, Guangdong, China

1 SUMMARY

1.1 Test Standards

The tests were performed according to following standards:

FCC Part 27: MISCELLANEOUS WIRELESS COMMUNICATIONS SERVICES.

TIA/EIA 603 D June 2010:Land Mobile FM or PM Communications Equipment Measurement and Performance Standards 47 CFR FCC Part 15 Subpart B: - Unintentional Radiators.

FCC Part 2: FREQUENCY ALLOCA-TIONS AND RADIO TREATY MAT-TERS; GENERAL RULES AND REG-ULATIONS.

KDB971168 D01: MEASUREMENT GUIDANCE FOR CERTIFICATION OF LICENSED DIGITAL TRANSMITTERS.

1.2 Test Description

Test Item	FCC /IC Rule No.	Result
RF Output Power	Part 2.1046 Part 27.50(c)(10)	Pass
Peak-to-Average Ratio	Part 2.1046	Pass
99% & -26 dB Occupied Bandwidth	Part 2.1049	Pass
Spurious Emissions at Antenna Terminal	Part 2.1051 Part 27.53(g)	Pass
Field Strength of Spurious Radiation	Part 2.1053 Part 27.53(g)	Pass
Out of band emission, Band Edge	Part 2.1051 Part 27.53(g)	Pass
Frequency stability	Part 2.1055 Part 27.54	Pass

The results shown in this test report refer only to the sample(s) tested unless otherwise stated and the sample(s) are retained for 30 days only. The document is issued by HUAK, this document cannot be reproduced except in full with our prior written permission. The more details and the authenticity of the report will be confirmed at http://www.cer-mark.com.

1.3 Information of The Test Laboratory

Shenzhen HUAK Testing Technology Co., Ltd.
Add.: 1-2/F., Building B2, Junfeng Zhongcheng Zhizao Innovation Park, Heping, Fuhai Street, Bao'an District, Shenzhen, Guangdong, China

Testing Laboratory Authorization：

A2LA Accreditation Code is 4781.01.
FCC Designation Number is CN1229.
Canada IC CAB identifier is CN0045.
CNAS Registration Number is L9589.

1.4 Statement of The Measurement Uncertainty

The data and results referenced in this document are true and accurate. The reader is cautioned that there may be errors within the calibration limits of the equipment and facilities. The measurement uncertainty was calculated for all measurements listed in this test report acc. to CISPR 16 - 4 „Specification for radio disturbance and immunity measuring apparatus and methods – Part 4:Uncertainty in EMC Measurements“ and is documented in the Shenzhen HUAK Testing Technology Co., Ltd.. quality system acc. to DIN EN ISO/IEC 17025. Furthermore, component and process variability of devices similar to that tested may result in additional deviation. The manufacturer has the sole responsibility of continued compliance of the device.

Hereafter the best measurement capability for Shenzhen HUAK Testing Technology Co., Ltd.

Test	Range	Measurement Uncertainty	Notes
Radiated Emission	30~1000MHz	4.10dB	(1)
Radiated Emission	Above 1GHz	4.32dB	(1)
Conducted Disturbance	0.15~30MHz	3.20dB	(1)

(1) This uncertainty represents an expanded uncertainty expressed at approximately the 95% confidence level using a coverage factor of k=2.

The results shown in this test report refer only to the sample(s) tested unless otherwise stated and the sample(s) are retained for 30 days only. The document is issued by HUAK, this document cannot be reproduced except in full with our prior written permission. The more details and the authenticity of the report will be confirmed at http://www.cer-mark.com.

2 GENERAL INFORMATION

2.1 Environmental Conditions

During the measurement the environmental conditions were within the listed ranges:

Normal Temperature:	25°C
Relative Humidity:	55 %
Air Pressure:	101 kPa

2.2 Description of Test Modes

The EUT has been tested under typical operating condition. The CMW500 used to control the EUT staying in continuous transmitting and receiving mode for testing. Regards to the frequency band operation: the lowest ☐middle and highest frequency of channel were selected to perform the test, then shown on this report.

Note:

1. For the ERP/EIRP and radiated emission test, every axis (X, Y, Z) was verified, and show the worst resulton this report.
2. Test method and refer to 3GPP TS136521.

The results shown in this test report refer only to the sample(s) tested unless otherwise stated and the sample(s) are retained for 30 days only. The document is issued by HUAK, this document cannot be reproduced except in full with our prior written permission. The more details and the authenticity of the report will be confirmed at http://www.cer-mark.com.

2.3 Equipments Used During The Test

Test Equipment	Manufacturer	Model No.	Serial No.	Calibration Date	Calibration Due Date
LISN	ENV216	R&S	HKE-059	2022/02/18	2023/02/17
LISN	R&S	ENV216	HKE-002	2022/02/18	2023/02/17
Broadband antenna	Schwarzbeck	VULB 9163	HKE-012	2022/02/18	2023/02/17
Receiver	R&S	ESCI 7	HKE-010	2022/02/18	2023/02/17
Spectrum analyzer	Agilent	N9020A	HKE-048	2022/02/18	2023/02/17
RF automatic control unit	Tonscend	JS0806-2	HKE-060	2022/02/18	2023/02/17
Horn antenna	Schwarzbeck	9120D	HKE-013	2022/02/18	2023/02/17
Loop antenna	Schwarzbeck	FMZB 1519 B	HKE-014	2022/02/18	2023/02/17
Preamplifier	EMCI	EMC051845SE	HKE-015	2022/02/18	2023/02/17
Preamplifier	Agilent	83051A	HKE-016	2022/02/18	2023/02/17
Temperature and humidity meter	Boyang	HTC-1	HKE-075	2022/02/18	2023/02/17
High pass filter unit	Tonscend	JS0806-F	HKE-055	2022/02/18	2023/02/17
RF cable	Times	1-40G	HKE-034	2022/02/18	2023/02/17
Power meter	Agilent	E4419B	HKE-085	2022/02/18	2023/02/17
Power Sensor	Agilent	E9300A	HKE-086	2022/02/18	2023/02/17
Wireless Communication Test Set	R&S	CMU200	HKE-026	2022/02/18	2023/02/17
High gain antenna	Schwarzbeck	LB-180400KF	HKE-054	2022/02/18	2023/02/17
Horn antenna	Schwarzbeck	9120D	HKE-135	2022/02/18	2023/02/17
High gain antenna	Schwarzbeck	LB-180400KF	HKE-128	2022/02/18	2023/02/17
Broadband antenna	Schwarzbeck	VULB 9163	HKE-087	2022/02/18	2023/02/17
Signal generator	Agilent	E4433B	HKE-120	2022/02/18	2023/02/17
Signal generator	Agilent	E4421B	HKE-121	2022/02/18	2023/02/17

2.4 Modifications

No modifications were implemented to meet testing criteria.

The results shown in this test report refer only to the sample(s) tested unless otherwise stated and the sample(s) are retained for 30 days only. The document is issued by HUAK, this document cannot be reproduced except in full with our prior written permission. The more details and the authenticity of the report will be confirmed at http://www.cer-mark.com.

3 TEST CONDITIONS AND RESULTS

3.1 Output Power

LIMIT

Portable stations (hand-held devices) in the 600 MHz uplink band and the 698-746 MHz band, and fixed and mobile stations in the 600 MHz uplink band are FCC limited to 3 watts ERP."IC limited to 5 watts ERP."

TEST CONFIGURATION

Conducted Power Measurement

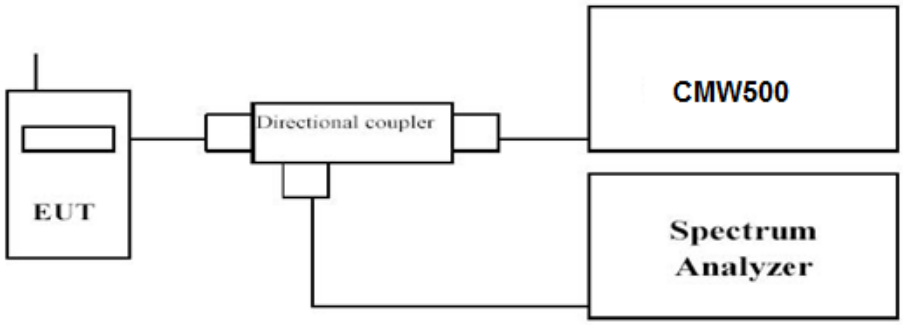

Radiated Power Measurement:

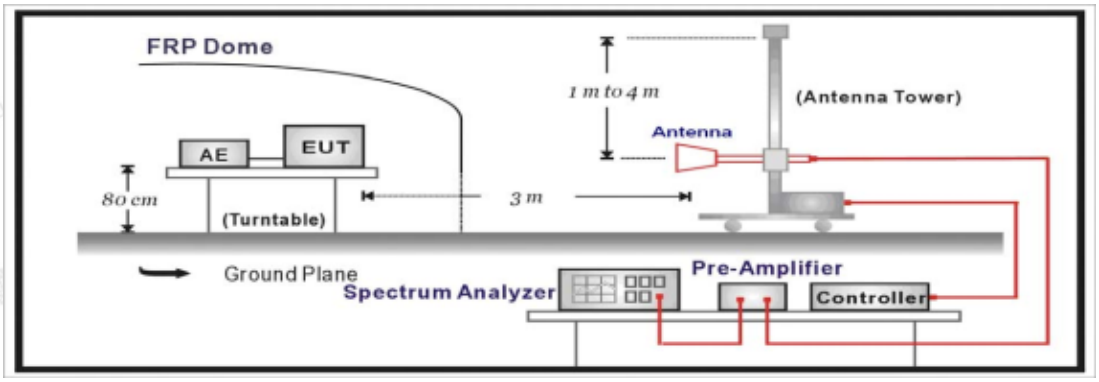

TEST PROCEDURE

The EUT was setup according to EIA/TIA 603D.

Conducted Power Measurement:

a) Place the EUT on a bench and set it in transmitting mode.
b) Connect a low loss RF cable from the antenna port to a spectrum analyzer and CMW500 by a Directional Couple.
c) EUT Communicate with CMW500, then select a channel for testing.
d) Add a correction factor to the display of spectrum, and then test.

Radiated Power Measurement:

a. The EUT shall be placed at the specified height on a support, and in the position closest to normal use as declared by provider.
b. The test antenna shall be oriented initially for vertical polarization and shall be chosen to correspond to thefrequency of the transmitter.
c. The output of the test antenna shall be connected to the measuring receiver.
d. The transmitter shall be switched on and the measuring receiver shall be tuned to the frequency of the transmitter under test.
e. The test antenna shall be raised and lowered through the specified range of height until a maximum signal level is detected by the measuring receiver.

The results shown in this test report refer only to the sample(s) tested unless otherwise stated and the sample(s) are retained for 30 days only. The document is issued by HUAK, this document cannot be reproduced except in full with our prior written permission. The more details and the authenticity of the report will be confirmed at http://www.cer-mark.com.

f. The transmitter shall then be rotated through 360° in the horizontal plane, until the maximum signal level is detected by the measuring receiver.
g. The test antenna shall be raised and lowered again through the specified range of height until a maximum signal level is detected by the measuring receiver.
h. The maximum signal level detected by the measuring receiver shall be noted.
i. The transmitter shall be replaced by a substitution antenna.
j. The substitution antenna shall be orientated for vertical polarization and the length of the substitution antenna shall be adjusted to correspond to the frequency of the transmitter.
k. The substitution antenna shall be connected to a calibrated signal generator.
l. If necessary, the input attenuator setting of the measuring receiver shall be adjusted in order to increase the sensitivity of the measuring receiver.
m. The test antenna shall be raised and lowered through the specified range of height to ensure that the maximum signal is received.
n. The input signal to the substitution antenna shall be adjusted to the level that produces a level detected by the measuring receiver, that is equal to the level noted while the transmitter radiated power was measured, corrected for the change of input attenuator setting of the measuring receiver.
o. The measurement shall be repeated with the test antenna and the substitution antenna orientated for horizontal polarization.
p. The measure of the effective radiated power is the larger of the two levels recorded at the input to the substitution antenna, corrected for gain of the substitution antenna if necessary.
q. Test site anechoic chamber refer to ANSI C63.4.

TEST RESULTS

Conducted Measurement:

LTE FDD Band 12				
TX Channel Bandwidth	RB Size/Offset	Frequency (MHz)	Average Power [dBm]	
			QPSK	16QAM
1.4 MHz	1 RB low	699.7	24.54	24.05
		707.5	24.64	23.89
		715.3	24.90	23.85
	1 RB high	699.7	24.81	23.74
		707.5	24.71	23.74
		715.3	24.80	23.70
	50% RB mid	699.7	23.86	22.97
		707.5	24.62	23.67
		715.3	24.62	23.69
	100% RB	699.7	24.49	23.37
		707.5	24.75	23.70
		715.3	24.75	23.42
3 MHz	1 RB low	700.5	24.57	23.68
		707.5	24.80	23.93
		714.5	24.63	23.67
	1 RB high	700.5	23.82	22.85
		707.5	23.83	22.85
		714.5	23.86	22.87
	50% RB mid	700.5	23.91	22.92
		707.5	24.70	23.77
		714.5	24.66	23.60
	100% RB	700.5	24.37	23.38
		707.5	23.84	22.84
		714.5	23.77	22.93
5 MHz	1 RB low	701.5	24.54	23.54
		707.5	24.74	23.57
		713.5	24.70	23.59
	1 RB high	701.5	23.75	22.85
		707.5	23.75	22.86

The results shown in this test report refer only to the sample(s) tested unless otherwise stated and the sample(s) are retained for 30 days only. The document is issued by HUAK, this document cannot be reproduced except in full with our prior written permission. The more details and the authenticity of the report will be confirmed at http://www.cer-mark.com.

		713.5	23.75	22.85
	50% RB mid	701.5	23.69	22.62
		707.5	24.65	23.63
		713.5	24.86	23.83
	100% RB	701.5	24.47	23.45
		707.5	23.76	22.73
		713.5	23.76	22.64
10 MHz	1 RB low	704.0	24.66	23.49
		707.5	24.54	24.07
		711.0	24.69	23.72
	1 RB high	704.0	23.73	22.64
		707.5	23.60	22.89
		711.0	23.64	22.62
	50% RB mid	704.0	23.64	22.66
		707.5	24.39	23.63
		711.0	25.15	24.55
	100% RB	704.0	24.53	23.70
		707.5	23.72	22.75
		711.0	23.73	22.75

The results shown in this test report refer only to the sample(s) tested unless otherwise stated and the sample(s) are retained for 30 days only. The document is issued by HUAK, this document cannot be reproduced except in full with our prior written permission. The more details and the authenticity of the report will be confirmed at http://www.cer-mark.com.

Radiated Measurement:

Remark:

1. *We were tested all RB Configuration refer 3GPP TS136 521 for each Channel Bandwidth of LTE FDD Band 12; recorded worst case for each Channel Bandwidth of LTE FDD Band 12.*
2. *EIRP=P_{Mea}(dBm)-P_{cl}(dB)+P_{Ag}(dB)+G_a(dBi)*
3. *ERP = EIRP – 2.15dBi as EIRP by subtracting the gain of the dipole.*

LTE FDD Band 12_Channel Bandwidth 1.4MHz_QPSK

Frequency (MHz)	P_{Mea} (dBm)	P_{cl} (dB)	G_a Antenna Gain(dB)	Correction (dB)	P_{Ag} (dB)	ERP (dBm)	Limit (dBm)	Polarization
699.7	-16.71	2.38	8.23	2.15	36.7	23.69	34.77	V
707.5	-17.96	2.4	8.29	2.15	36.7	22.48	34.77	V
715.3	-18.53	2.43	8.28	2.15	36.7	21.87	34.77	V

LTE FDD Band 12_Channel Bandwidth 3MHz_QPSK

Frequency (MHz)	P_{Mea} (dBm)	P_{cl} (dB)	G_a Antenna Gain(dB)	Correction (dB)	P_{Ag} (dB)	ERP (dBm)	Limit (dBm)	Polarization
700.5	-17.71	2.38	8.23	2.15	36.7	22.69	34.77	V
707.5	-19.04	2.4	8.29	2.15	36.7	21.4	34.77	V
714.5	-17.66	2.43	8.28	2.15	36.7	22.74	34.77	V

LTE FDD Band 12_Channel Bandwidth 5MHz_QPSK

Frequency (MHz)	P_{Mea} (dBm)	P_{cl} (dB)	G_a Antenna Gain(dB)	Correction (dB)	P_{Ag} (dB)	ERP (dBm)	Limit (dBm)	Polarization
701.5	-17.6	2.38	8.23	2.15	36.7	22.8	34.77	V
707.5	-18.54	2.4	8.29	2.15	36.7	21.9	34.77	V
713.5	-17.96	2.43	8.28	2.15	36.7	22.44	34.77	V

LTE FDD Band 12_Channel Bandwidth 10MHz_QPSK

Frequency (MHz)	P_{Mea} (dBm)	P_{cl} (dB)	G_a Antenna Gain(dB)	Correction (dB)	P_{Ag} (dB)	ERP (dBm)	Limit (dBm)	Polarization
704.0	-18.03	2.38	8.23	2.15	36.7	22.37	34.77	V
707.5	-18.28	2.4	8.29	2.15	36.7	22.16	34.77	V
711.0	-18.83	2.43	8.28	2.15	36.7	21.57	34.77	V

LTE FDD Band 12_Channel Bandwidth 1.4MHz_16QAM

Frequency (MHz)	P_{Mea} (dBm)	P_{cl} (dB)	G_a Antenna Gain(dB)	Correction (dB)	P_{Ag} (dB)	ERP (dBm)	Limit (dBm)	Polarization
699.7	-18.7	2.38	8.23	2.15	36.7	21.7	34.77	V
707.5	-17.89	2.4	8.29	2.15	36.7	22.55	34.77	V
715.3	-19.08	2.43	8.28	2.15	36.7	21.32	34.77	V

LTE FDD Band 12_Channel Bandwidth 3MHz_16QAM

Frequency (MHz)	P_{Mea} (dBm)	P_{cl} (dB)	G_a Antenna Gain(dB)	Correction (dB)	P_{Ag} (dB)	ERP (dBm)	Limit (dBm)	Polarization
700.5	-17.73	2.38	8.23	2.15	36.7	22.67	34.77	V
707.5	-18.06	2.4	8.29	2.15	36.7	22.38	34.77	V
714.5	-18.72	2.43	8.28	2.15	36.7	21.68	34.77	V

The results shown in this test report refer only to the sample(s) tested unless otherwise stated and the sample(s) are retained for 30 days only. The document is issued by HUAK, this document cannot be reproduced except in full with our prior written permission. The more details and the authenticity of the report will be confirmed at http://www.cer-mark.com.

LTE FDD Band 12_Channel Bandwidth 5MHz_16QAM

Frequency (MHz)	P_{Mea} (dBm)	P_{cl} (dB)	G_a Antenna Gain(dB)	Correction (dB)	P_{Ag} (dB)	ERP (dBm)	Limit (dBm)	Polarization
701.5	-18.53	2.38	8.23	2.15	36.7	21.87	34.77	V
707.5	-17.45	2.4	8.29	2.15	36.7	22.99	34.77	V
713.5	-18.04	2.43	8.28	2.15	36.7	22.36	34.77	V

LTE FDD Band 12_Channel Bandwidth 10MHz_16QAM

Frequency (MHz)	P_{Mea} (dBm)	P_{cl} (dB)	G_a Antenna Gain(dB)	Correction (dB)	P_{Ag} (dB)	ERP (dBm)	Limit (dBm)	Polarization
704.0	-19.03	2.38	8.23	2.15	36.7	21.37	34.77	V
707.5	-17.72	2.4	8.29	2.15	36.7	22.72	34.77	V
711.0	-18.56	2.43	8.28	2.15	36.7	21.84	34.77	V

The results shown in this test report refer only to the sample(s) tested unless otherwise stated and the sample(s) are retained for 30 days only. The document is issued by HUAK, this document cannot be reproduced except in full with our prior written permission. The more details and the authenticity of the report will be confirmed at http://www.cer-mark.com.

3.2 Peak-to-Average Ratio (PAR)

LIMIT

The Peak-to-Average Ratio (PAR) of the transmission may not exceed 13 dB.

TEST CONFIGURATION

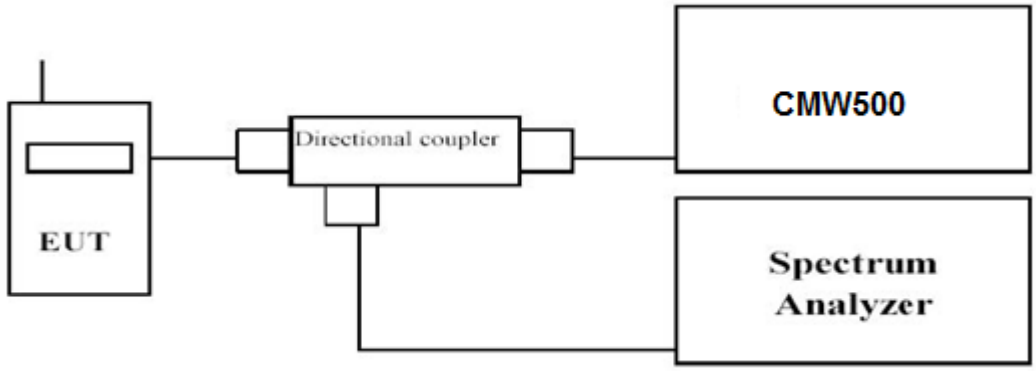

TEST PROCEDURE

1. Refer to instrument's analyzer instruction manual for details on how to use the power statistics/CCDF function;
2. Set resolution/measurement bandwidth ≥ signal's occupied bandwidth;
3. Set the number of counts to a value that stabilizes the measured CCDF curve;
4. Set the measurement interval as follows:
   1). for continuous transmissions, set to 1 ms;
   2). for burst transmissions, employ an external trigger that is synchronized with the EUT burst timing sequence, or use the internal burst trigger with a trigger level that allows the burst to stabilize and set the measurement interval to a time that is less than or equal to the burst duration.
5. Record the maximum PAPR level associated with a probability of 0.1%.

TEST RESULTS

Remark:

1. *We were tested all RB Configuration refer 3GPP TS136 521 for each Channel Bandwidth of LTE FDD Band 12; recorded worst case for each Channel Bandwidth of LTE FDD Band 12.*

LTE FDD Band 12				
TX Channel Bandwidth	Frequency (MHz)	RB Size/Offset	PAPR (dB)	
			QPSK	16QAM
1.4 MHz	699.7	*1RB#0*	4.35	5.35
	707.5		4.45	5.46
	715.3		4.34	5.40
3 MHz	700.5	*1RB#0*	4.37	5.26
	707.5		4.49	5.36
	714.5		4.44	5.42
5 MHz	701.5	*1RB#0*	4.36	5.14
	707.5		4.44	5.41
	713.5		4.41	5.32
10 MHz	704.0	*1RB#0*	4.27	5.31
	707.5		4.36	5.36
	711.0		4.37	5.27

The results shown in this test report refer only to the sample(s) tested unless otherwise stated and the sample(s) are retained for 30 days only. The document is issued by HUAK, this document cannot be reproduced except in full with our prior written permission. The more details and the authenticity of the report will be confirmed at http://www.cer-mark.com.

LTE FDD Band 12-1.4MHz Channel Bandwidth PAPR	
QPSK	16QAM
1RB#0	1RB#0
Low Channel	
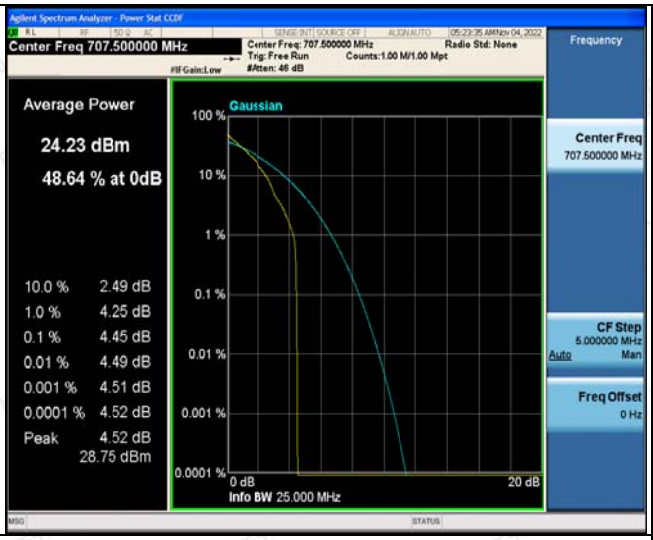	
1RB#0	1RB#0
Middle Channel	
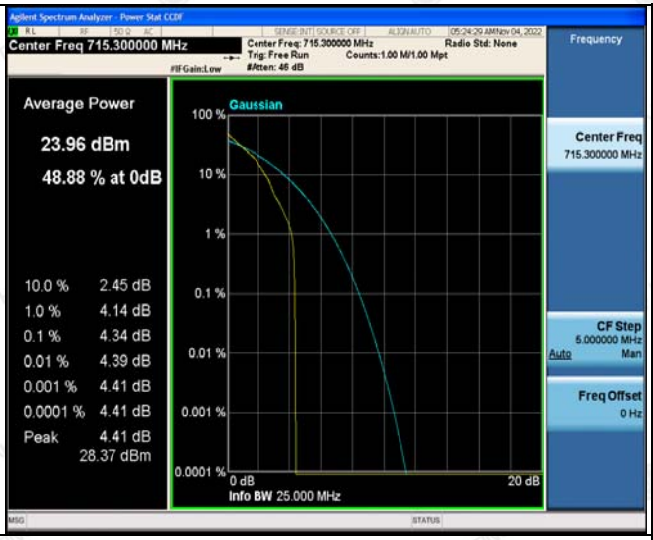	
1RB#0	1RB#0
High Channel	

The results shown in this test report refer only to the sample(s) tested unless otherwise stated and the sample(s) are retained for 30 days only. The document is issued by HUAK, this document cannot be reproduced except in full with our prior written permission. The more details and the authenticity of the report will be confirmed at http://www.cer-mark.com.

LTE FDD Band 12-3MHz Channel Bandwidth PAPR	
QPSK	16QAM
1RB#0	1RB#0
Low Channel	
1RB#0	1RB#0
Middle Channel	
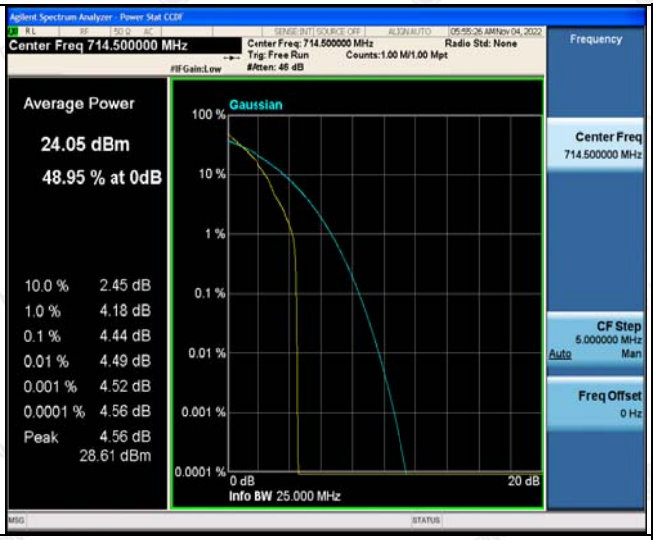	
1RB#0	1RB#0
High Channel	

The results shown in this test report refer only to the sample(s) tested unless otherwise stated and the sample(s) are retained for 30 days only. The document is issued by HUAK, this document cannot be reproduced except in full with our prior written permission. The more details and the authenticity of the report will be confirmed at http://www.cer-mark.com.

LTE FDD Band 12-5MHz Channel Bandwidth PAPR	
QPSK	16QAM
1RB#0	1RB#0
Low Channel	
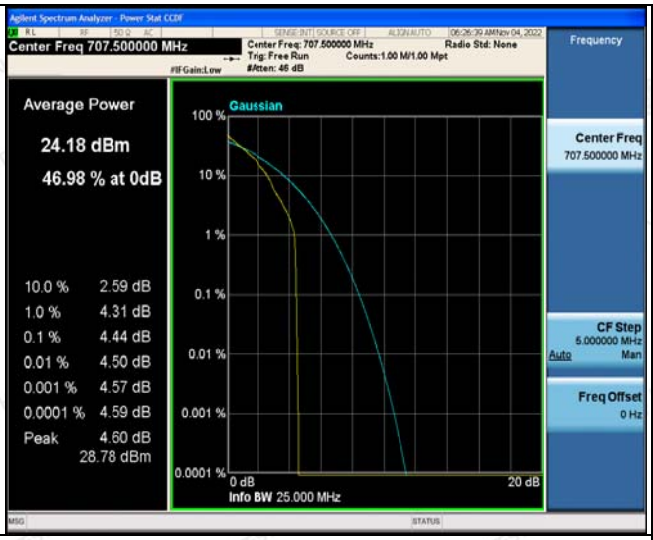	
1RB#0	1RB#0
Middle Channel	
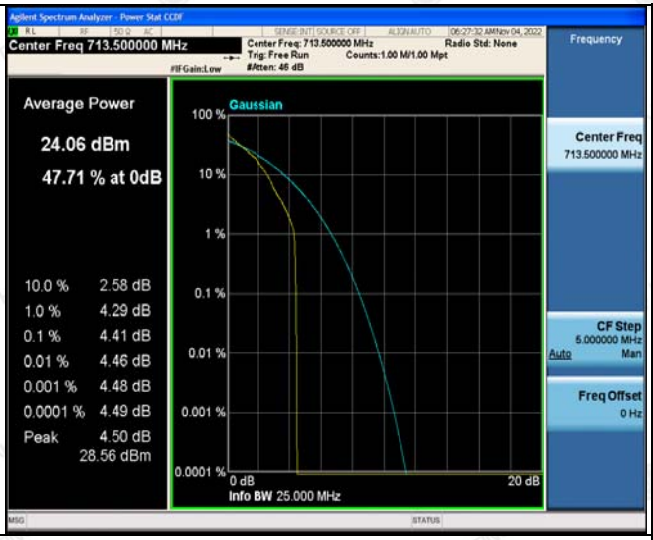	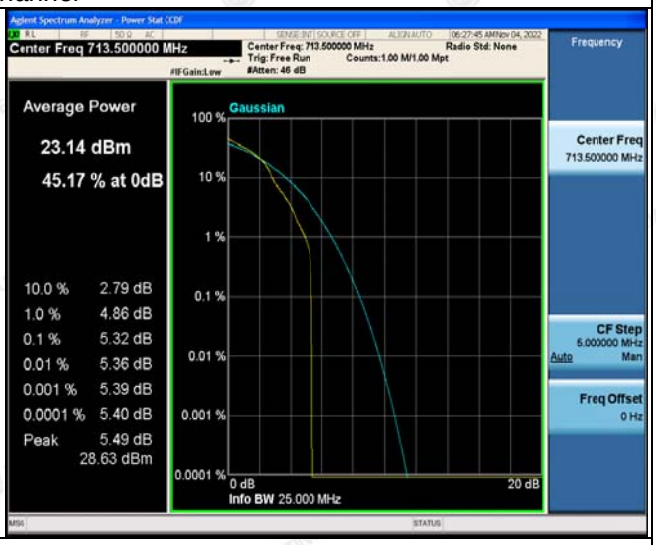
1RB#0	1RB#0
High Channel	

The results shown in this test report refer only to the sample(s) tested unless otherwise stated and the sample(s) are retained for 30 days only. The document is issued by HUAK, this document cannot be reproduced except in full with our prior written permission. The more details and the authenticity of the report will be confirmed at http://www.cer-mark.com.

LTE FDD Band 12-10MHz Channel Bandwidth PAPR	
QPSK	16QAM
1RB#0	1RB#0
Low Channel	
1RB#0	1RB#0
Middle Channel	
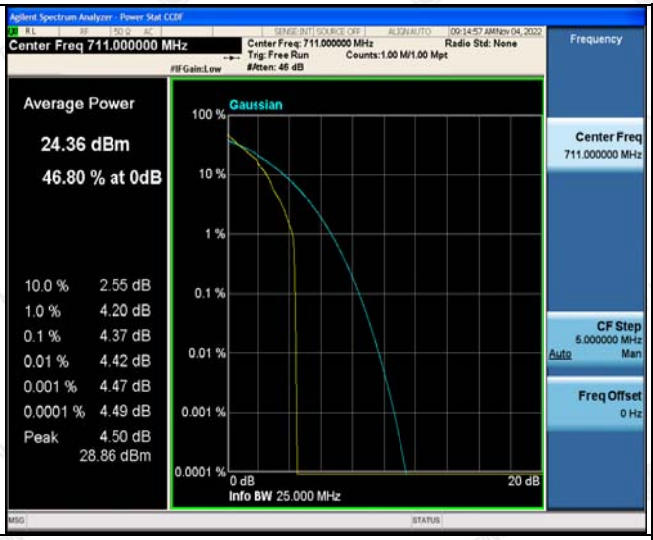	
1RB#0	1RB#0
High Channel	

The results shown in this test report refer only to the sample(s) tested unless otherwise stated and the sample(s) are retained for 30 days only. The document is issued by HUAK, this document cannot be reproduced except in full with our prior written permission. The more details and the authenticity of the report will be confirmed at http://www.cer-mark.com.

3.3 Occupied Bandwidth and Emission Bandwidth

LIMIT

N/A

TEST CONFIGURATION

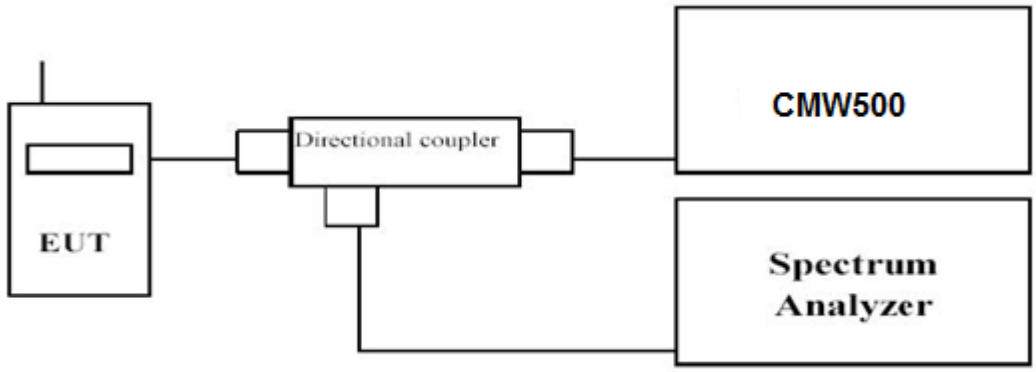

TEST PROCEDURE

The transmitter output was connected to a calibrated coaxial cable and coupler, the other end of which was connected to a spectrum analyzer. The occupied bandwidth was measured with the spectrum analyzer at low, middle and high channel in each band. The -26dBc Emission bandwidth was also measured and recorded.
Set RBW was set to about 1% of emission BW, VBW≥3 times RBW.
-26dBc display line was placed on the screen (or 99% bandwidth), the occupied bandwidth is the delta frequency between the two points where the display line intersects the signal trace.

TEST RESULTS

Remark:

1. *We were tested all RB Configuration refer 3GPP TS136 521 for each Channel Bandwidth of LTE FDD Band 12; recorded worst case for each Channel Bandwidth of LTE FDD Band 12.*

LTE FDD Band 12						
TX Channel Bandwidth	RB Size/Offset	Frequency (MHz)	-26dBc Emission bandwidth (MHz)		99% Occupied bandwidth (MHz)	
			QPSK	16QAM	QPSK	16QAM
1.4 MHz	*6RB#0*	699.7	1.296	1.314	1.0931	1.0991
		707.5	1.288	1.287	1.0961	1.0972
		715.3	1.292	1.304	1.0942	1.0962
3 MHz	*15RB#0*	700.5	2.964	2.981	2.7035	2.6942
		707.5	2.966	2.968	2.6969	2.6947
		714.5	2.963	2.967	2.7008	2.6955
5 MHz	*25RB#0*	701.5	5.030	5.000	4.5126	4.5099
		707.5	5.000	5.028	4.4964	4.5060
		713.5	5.013	5.046	4.5077	4.5221
10 MHz	*50RB#0*	704.0	9.915	9.881	8.9696	8.9575
		707.5	9.897	9.877	8.9511	8.9408
		711.0	9.930	9.863	8.9741	8.9660

The results shown in this test report refer only to the sample(s) tested unless otherwise stated and the sample(s) are retained for 30 days only. The document is issued by HUAK, this document cannot be reproduced except in full with our prior written permission. The more details and the authenticity of the report will be confirmed at http://www.cer-mark.com.

LTE FDD Band 12-1.4MHz Channel Bandwidth

QPSK	*16QAM*
6RB#0	*6RB#0*
Low Channel	
	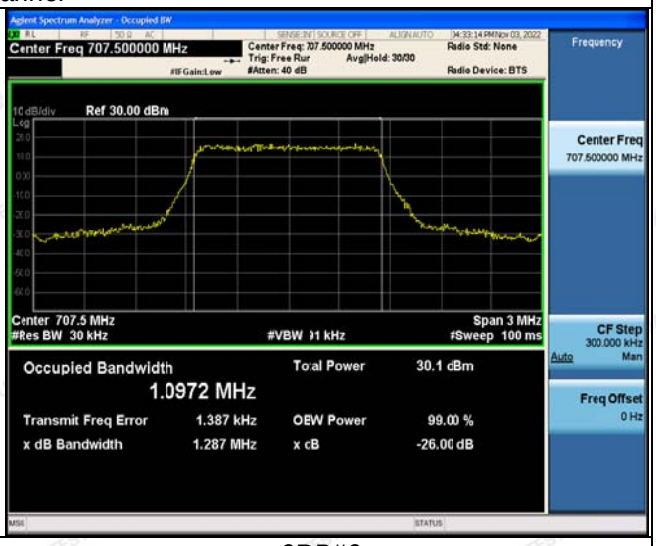
6RB#0	*6RB#0*
Middle Channel	
6RB#0	*6RB#0*
High Channel	

The results shown in this test report refer only to the sample(s) tested unless otherwise stated and the sample(s) are retained for 30 days only. The document is issued by HUAK, this document cannot be reproduced except in full with our prior written permission. The more details and the authenticity of the report will be confirmed at http://www.cer-mark.com.

LTE FDD Band 12-3MHz Channel Bandwidth	
QPSK	16QAM
15RB#0	15RB#0
Low Channel	
15RB#0	15RB#0
Middle Channel	
15RB#0	15RB#0
High Channel	

The results shown in this test report refer only to the sample(s) tested unless otherwise stated and the sample(s) are retained for 30 days only. The document is issued by HUAK, this document cannot be reproduced except in full with our prior written permission. The more details and the authenticity of the report will be confirmed at http://www.cer-mark.com.

LTE FDD Band 12-5MHz Channel Bandwidth	
QPSK	16QAM
25RB#0	25RB#0
Low Channel	
25RB#0	25RB#0
Middle Channel	
25RB#0	25RB#0
High Channel	

The results shown in this test report refer only to the sample(s) tested unless otherwise stated and the sample(s) are retained for 30 days only. The document is issued by HUAK, this document cannot be reproduced except in full with our prior written permission. The more details and the authenticity of the report will be confirmed at http://www.cer-mark.com.

TEL：+86-755 2302 9901 FAX ：+86-755 2302 9901 E-mail：service@cer-mark.com
Add: 1-2F., Building B2, Junfeng Zhongcheng Zhizao Innovation Park, Heping Community, Fuhai Street, Bao'an District, Shenzhen, Guangdong, China

LTE FDD Band 12-10MHz Channel Bandwidth	
QPSK	16QAM
50RB#0	50RB#0
Low Channel	
50RB#0	50RB#0
Middle Channel	
50RB#0	50RB#0
High Channel	

The results shown in this test report refer only to the sample(s) tested unless otherwise stated and the sample(s) are retained for 30 days only. The document is issued by HUAK, this document cannot be reproduced except in full with our prior written permission. The more details and the authenticity of the report will be confirmed at http://www.cer-mark.com.

3.4 Band Edge Compliance

LIMIT

that the power of any emission outside of the authorized operating frequency ranges must be attenuated below the transmitting power (P) by a factor of at least 43 + 10 log (P) dB.
The specification that emissions shall be attenuated below the transmitter power (P) by at least 43 + 10 log (P) dB, translates in the relevant power range (1 to 0.001 W) to -13 dBm. At 1 W the specified minimum attenuation becomes 43 dB and relative to a 30 dBm (1 W) carrier becomes a limit of -13 dBm. At 0.001 W (0 dBm) the minimum attenuation is 13 dB, which again yields a limit of -13 dBm. In this way a translation of the specification from relative to absolute terms is carried out.

TEST CONFIGURATION

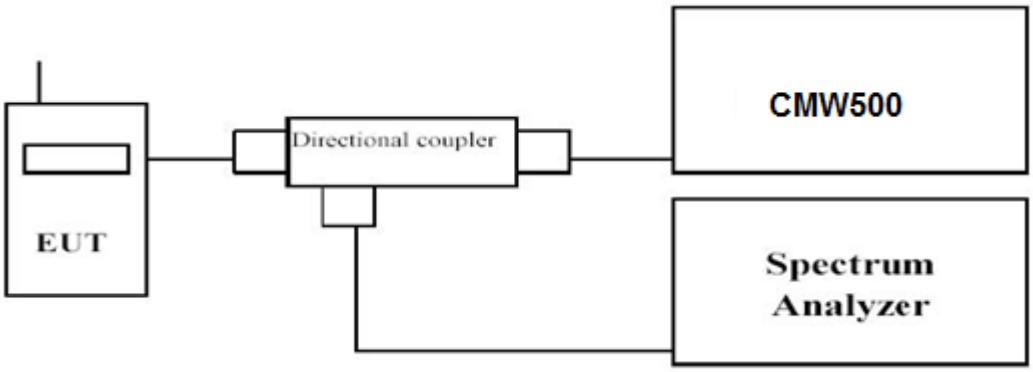

TEST PROCEDURE

1. The transmitter output port was connected to base station.
2. The RF output of EUT was connected to the power meter by RF cable and attenuator, the path loss was compensated to the results for each measurement.
3. Set EUT at maximum power through base station.
4. Select lowest and highest channels for each band and different modulation.
5. Measure Band edge using RMS (Average) detector by spectrum.

TEST RESULTS

Remark:

1. *We were tested all RB Configuration refer 3GPP TS136 521 for each Channel Bandwidth of LTE FDD Band 12; recorded worst case for each Channel Bandwidth of LTE FDD Band 12.*

The results shown in this test report refer only to the sample(s) tested unless otherwise stated and the sample(s) are retained for 30 days only. The document is issued by HUAK, this document cannot be reproduced except in full with our prior written permission. The more details and the authenticity of the report will be confirmed at http://www.cer-mark.com.

LTE FDD Band 12-1.4MHz Channel Bandwidth Band Edge Compliance

QPSK

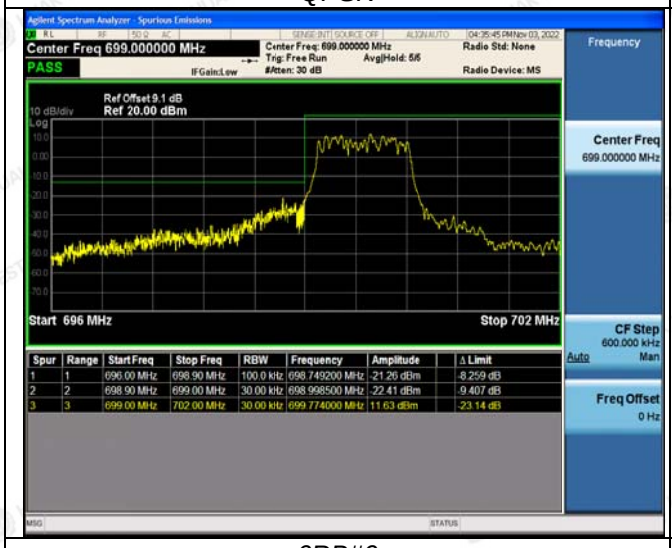

6RB#0

16QAM

6RB#0

Low Channel

6RB#0

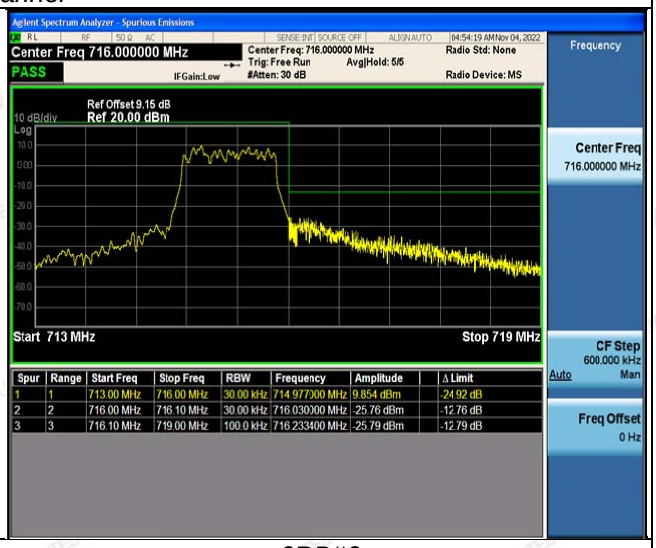

6RB#0

High Channel

The results shown in this test report refer only to the sample(s) tested unless otherwise stated and the sample(s) are retained for 30 days only. The document is issued by HUAK, this document cannot be reproduced except in full with our prior written permission. The more details and the authenticity of the report will be confirmed at http://www.cer-mark.com.

LTE FDD Band 12-3MHz Channel Bandwidth Band Edge Compliance

QPSK

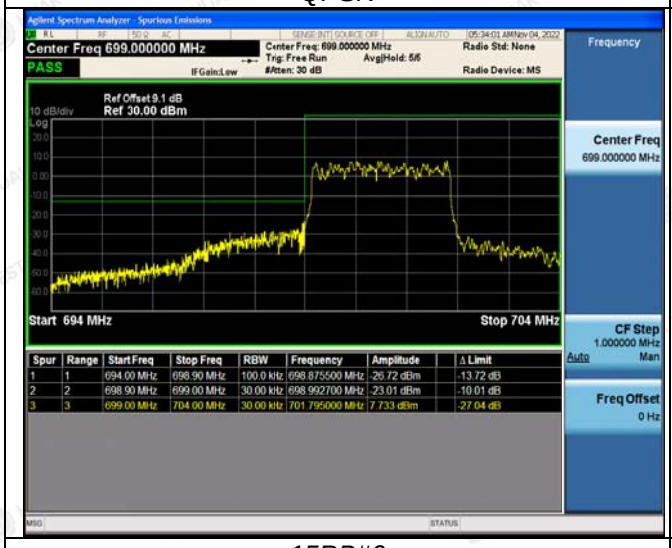

15RB#0

16QAM

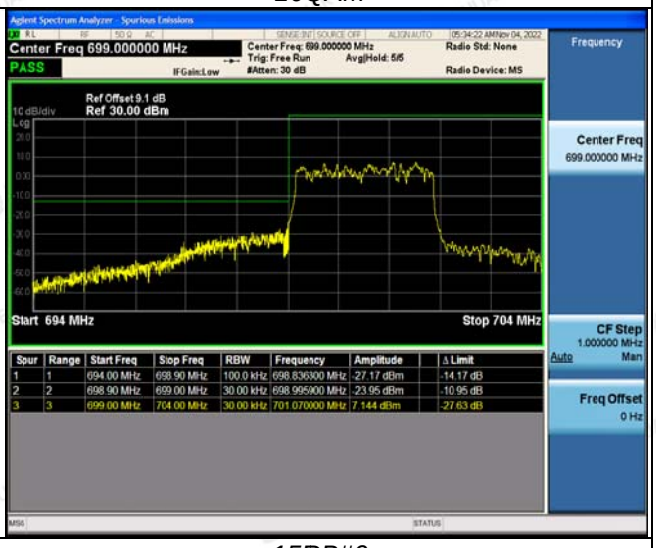

15RB#0

Low Channel

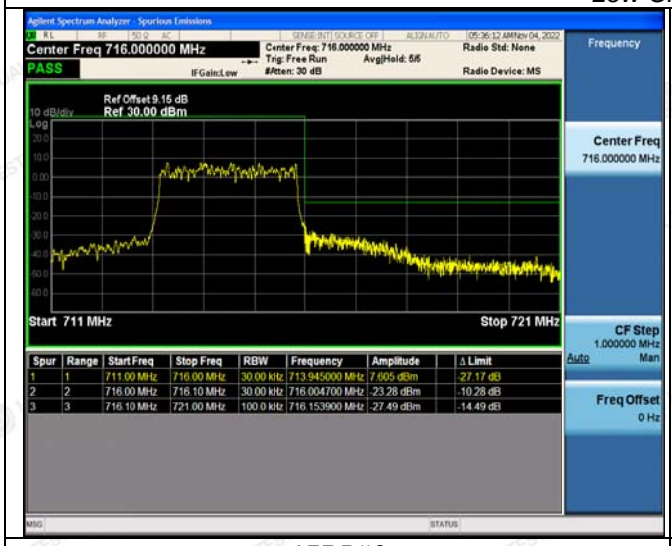

15RB#0

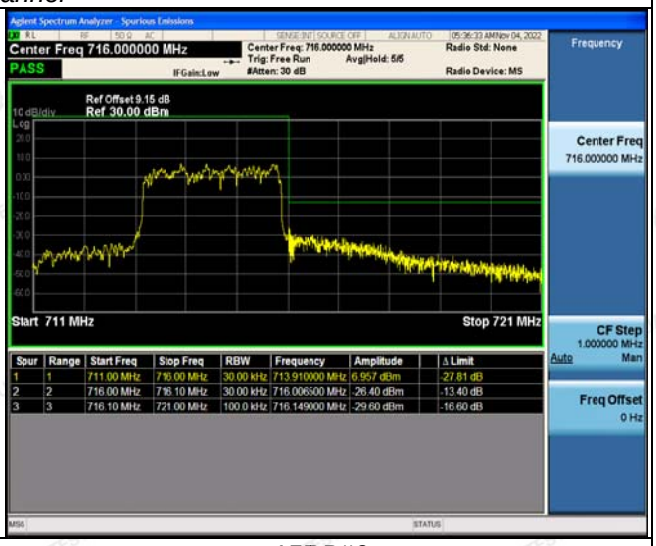

15RB#0

High Channel

The results shown in this test report refer only to the sample(s) tested unless otherwise stated and the sample(s) are retained for 30 days only. The document is issued by HUAK, this document cannot be reproduced except in full with our prior written permission. The more details and the authenticity of the report will be confirmed at http://www.cer-mark.com.

LTE FDD Band 12-5MHz Channel Bandwidth Band Edge Compliance

QPSK

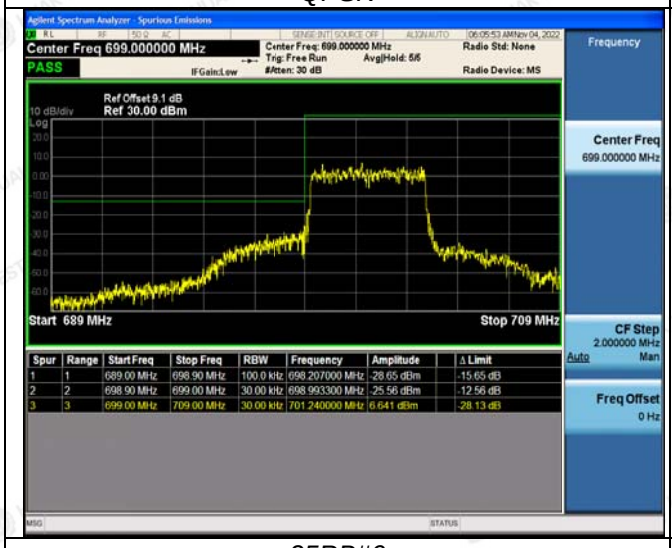

25RB#0

16QAM

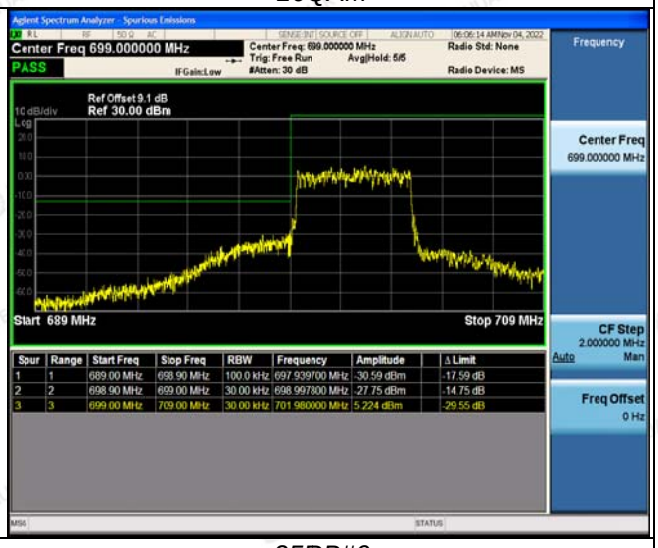

25RB#0

Low Channel

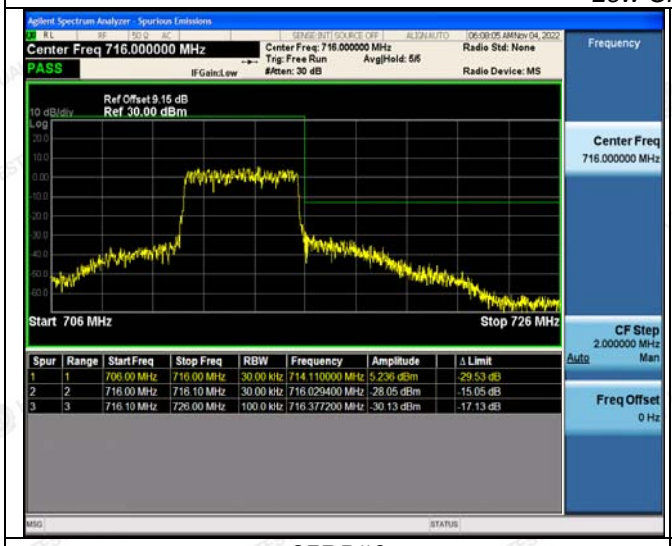

25RB#0

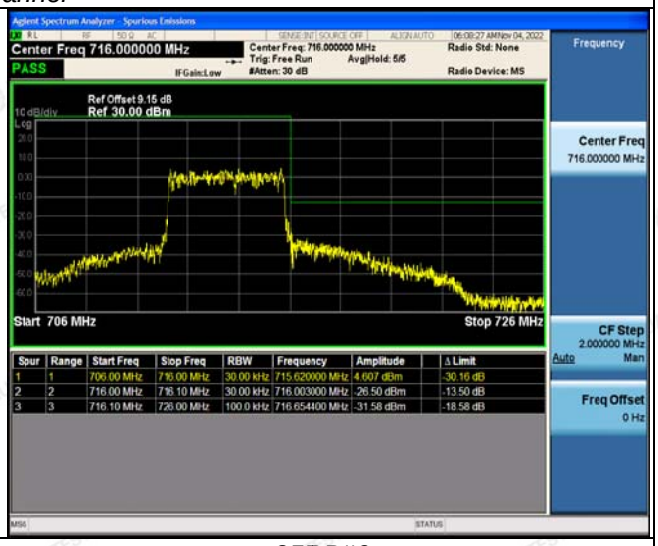

25RB#0

High Channel

The results shown in this test report refer only to the sample(s) tested unless otherwise stated and the sample(s) are retained for 30 days only. The document is issued by HUAK, this document cannot be reproduced except in full with our prior written permission. The more details and the authenticity of the report will be confirmed at http://www.cer-mark.com.

LTE FDD Band 12-10MHz Channel Bandwidth Band Edge Compliance	
QPSK	16QAM
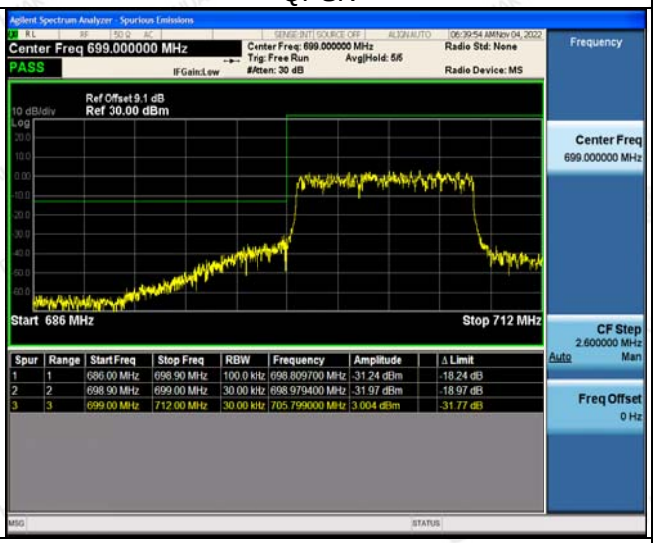	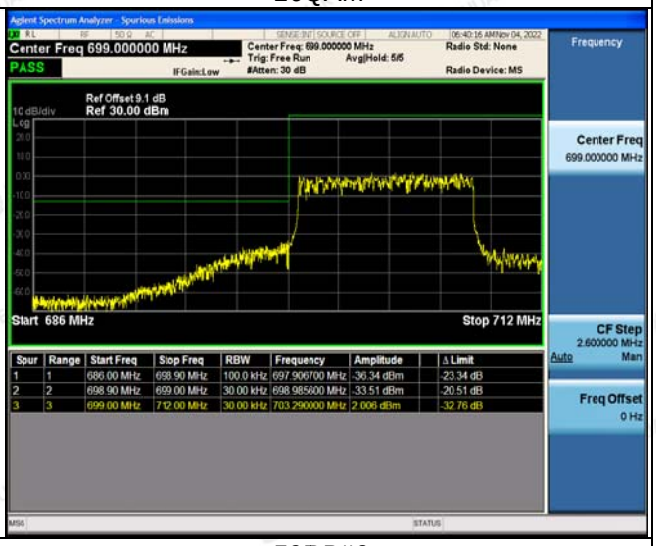
50RB#0	50RB#0
Low Channel	
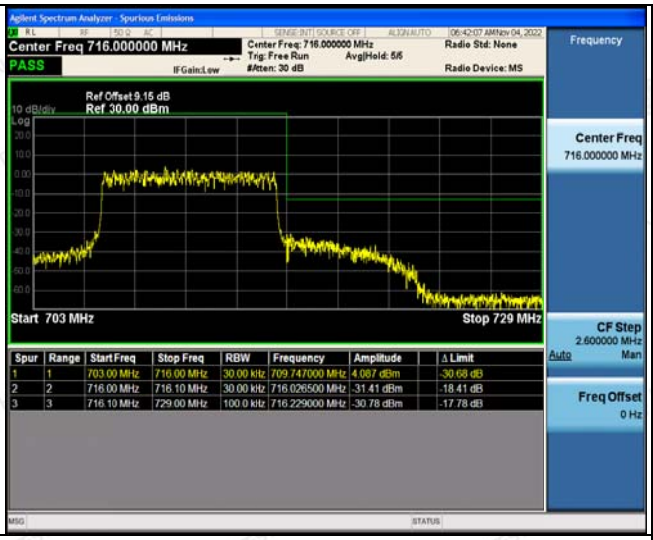	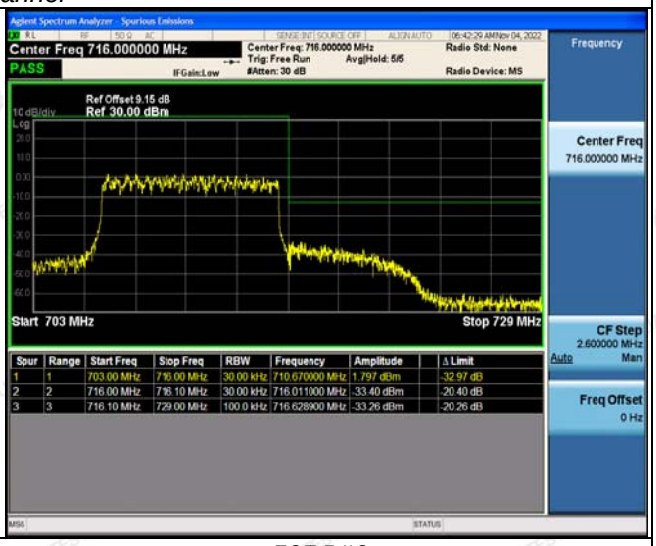
50RB#0	50RB#0
High Channel	

The results shown in this test report refer only to the sample(s) tested unless otherwise stated and the sample(s) are retained for 30 days only. The document is issued by HUAK, this document cannot be reproduced except in full with our prior written permission. The more details and the authenticity of the report will be confirmed at http://www.cer-mark.com.

3.5 Spurious Emission

LIMIT

that the power of any emission outside of the authorized operating frequency ranges must be attenuated below the transmitting power (P) by a factor of at least 43 + 10 log (P) dB.
The specification that emissions shall be attenuated below the transmitter power (P) by at least 43 + 10 log (P) dB, translates in the relevant power range (1 to 0.001 W) to -13 dBm. At 1 W the specified minimum attenuation becomes 43 dB and relative to a 30 dBm (1 W) carrier becomes a limit of -13 dBm. At 0.001 W (0 dBm) the minimum attenuation is 13 dB, which again yields a limit of -13 dBm. In this way a translation of the specification from relative to absolute terms is carried out.

TEST CONFIGURATION

Conducted Spurious Measurement:

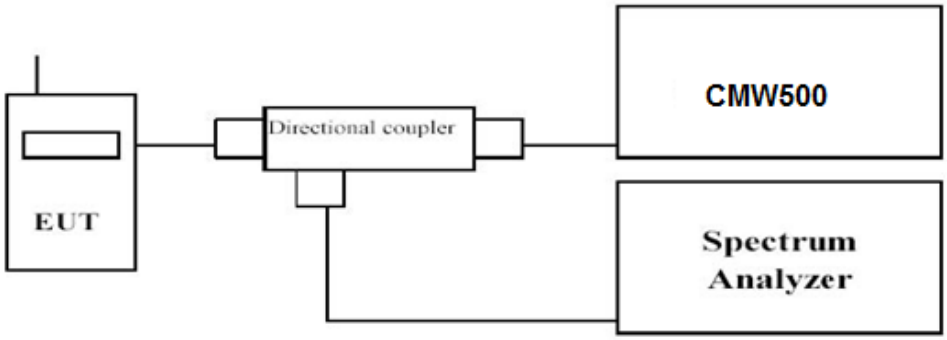

Radiated Spurious Measurement:

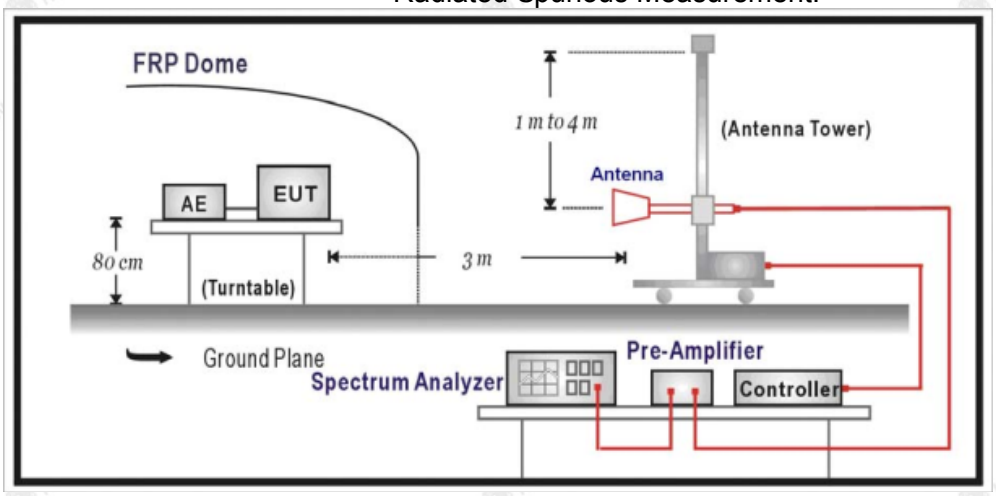

TEST PROCEDURE

The EUT was setup according to EIA/TIA 603D.

Conducted Spurious Measurement:

a. Place the EUT on a bench and set it in transmitting mode.
b. Connect a low loss RF cable from the antenna port to a spectrum analyzer and CMW500 by a Directional Couple.
c. EUT Communicate with CMW500, then select a channel for testing.
d. Add a correction factor to the display of spectrum, and then test.
e. The resolution bandwidth of the spectrum analyzer was set sufficient scans were taken to show the out of band Emission if any up to10th harmonic.
f. Please refer to following tables for test antenna conducted emissions.

The results shown in this test report refer only to the sample(s) tested unless otherwise stated and the sample(s) are retained for 30 days only. The document is issued by HUAK, this document cannot be reproduced except in full with our prior written permission. The more details and the authenticity of the report will be confirmed at http://www.cer-mark.com.

g.

Working Frequency	Sub range (GHz)	RBW	VBW	Sweep time (s)
LTE FDD Band 12	0.03~26.5	1 MHz	3 MHz	Auto

Radiated Spurious Measurement:

a. The EUT shall be placed at the specified height on a support, and in the position closest to normal use as declared by provider.
b. The test antenna shall be oriented initially for vertical polarization and shall be chosen to correspond to the frequency of the transmitter.
c. The output of the test antenna shall be connected to the measuring receiver.
d. The transmitter shall be switched on and the measuring receiver shall be tuned to the frequency of the transmitter under test.
e. The test antenna shall be raised and lowered through the specified range of height until a maximum signal level is detected by the measuring receiver.
f. The transmitter shall then be rotated through 360° in the horizontal plane, until the maximum signal level is detected by the measuring receiver.
g. The test antenna shall be raised and lowered again through the specified range of height until a maximum signal level is detected by the measuring receiver.
h. The maximum signal level detected by the measuring receiver shall be noted.
i. The transmitter shall be replaced by a substitution antenna.
j. The substitution antenna shall be orientated for vertical polarization and the length of the substitution antenna shall be adjusted to correspond to the frequency of the transmitter.
k. The substitution antenna shall be connected to a calibrated signal generator.
l. If necessary, the input attenuator setting of the measuring receiver shall be adjusted in order to increase the sensitivity of the measuring receiver.
m. The test antenna shall be raised and lowered through the specified range of height to ensure that the maximum signal is received.
n. The input signal to the substitution antenna shall be adjusted to the level that produces a level detected by the measuring receiver, that is equal to the level noted while the transmitter radiated power was measured, corrected for the change of input attenuator setting of the measuring receiver.
o. The measurement shall be repeated with the test antenna and the substitution antenna orientated for horizontal polarization.
p. The measure of the effective radiated power is the larger of the two levels recorded at the input to the substitution antenna, corrected for gain of the substitution antenna if necessary.
q. The resolution bandwidth of the spectrum analyzer was set at 100 kHz for Part 22 and 1MHz for Part 24. The frequency range was checked up to 10th harmonic.
r. Test site anechoic chamber refer to ANSI C63.

TEST RESULTS

Remark:

1. *We were tested all RB Configuration refer 3GPP TS136 521 for each Channel Bandwidth of LTE FDD Band 12; recorded worst case for each Channel Bandwidth of LTE FDD Band 12.*

Conducted Measurement:

The results shown in this test report refer only to the sample(s) tested unless otherwise stated and the sample(s) are retained for 30 days only. The document is issued by HUAK, this document cannot be reproduced except in full with our prior written permission. The more details and the authenticity of the report will be confirmed at http://www.cer-mark.com.