User Manual

4G Security Camera

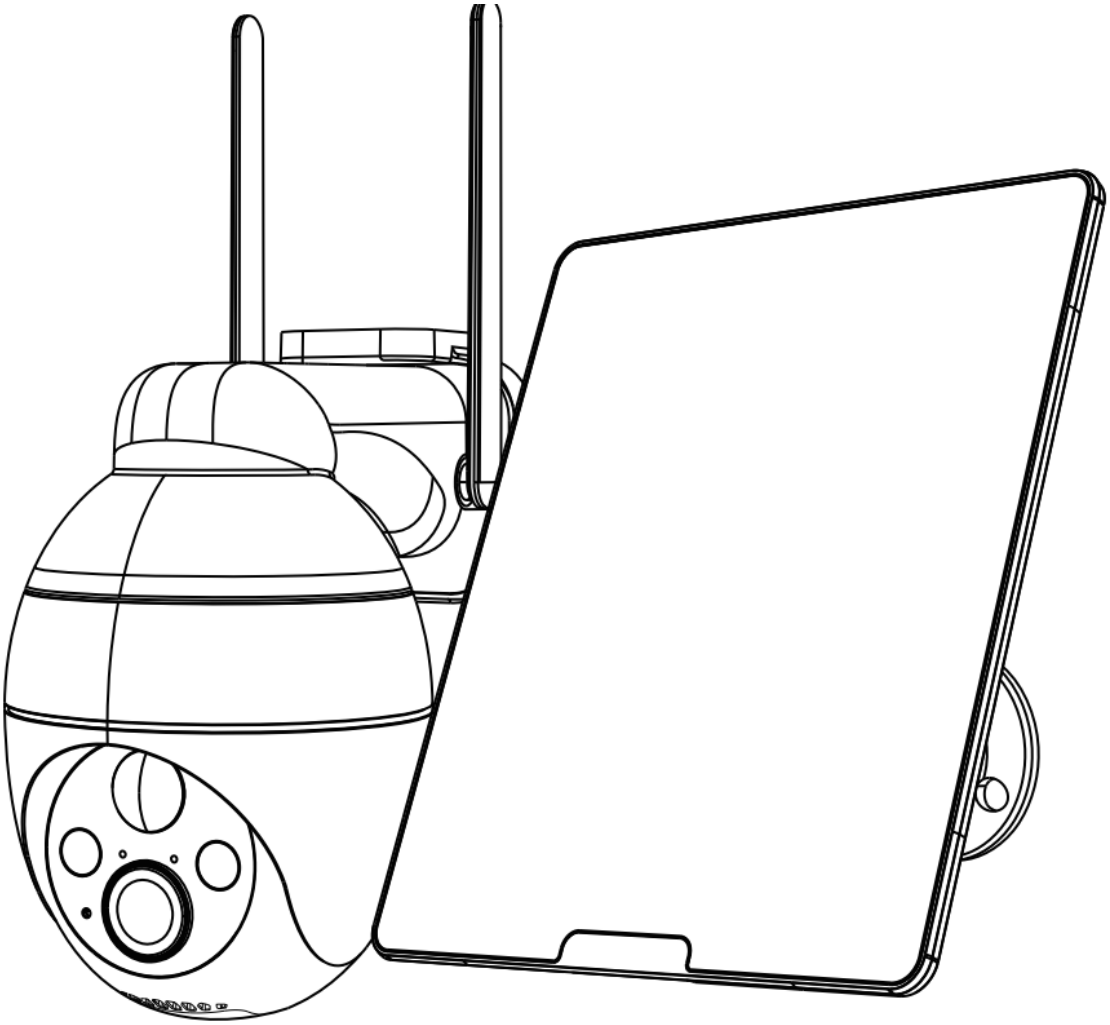

Important Instructions Before Using

① Although every effort is made to make the manuals complete and accurate, there may be some discrepancies due to product updates.

② Please insert or pull out the SIM card only when the camera is turned off.

③ In order to ensure that the camera can obtain a good mobile network, it is recommended that you use the SIM card that comes with the camera.

④ The SIM card that comes with the camera only provides 100M of data for free. Please add the data plan in the APP in time after adding the camera successfully.

⑤ To ensure the continuous use of the camera, please ensure that the SIM card has sufficient data, and continue to supplement the data plan for the SIM card.

⑥ The camera is specially designed for sports events and does not support 24/7 video streaming and recording.

⑦ In order to ensure the battery life, it is not recommended to point the camera directly at the road or in a place with a lot of people/vehicles

Contact Us

7/24 Service Email：

What's in the Box?

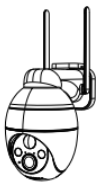

Camera

Camera Bracket

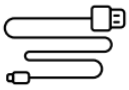

Charging Cable

Solar Panel

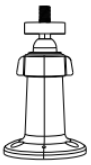

Solar Panel Bracket

Screw Bag

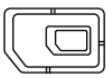

SIM Card

SIM Card Tweezers

Product Manual

Camera Introduction

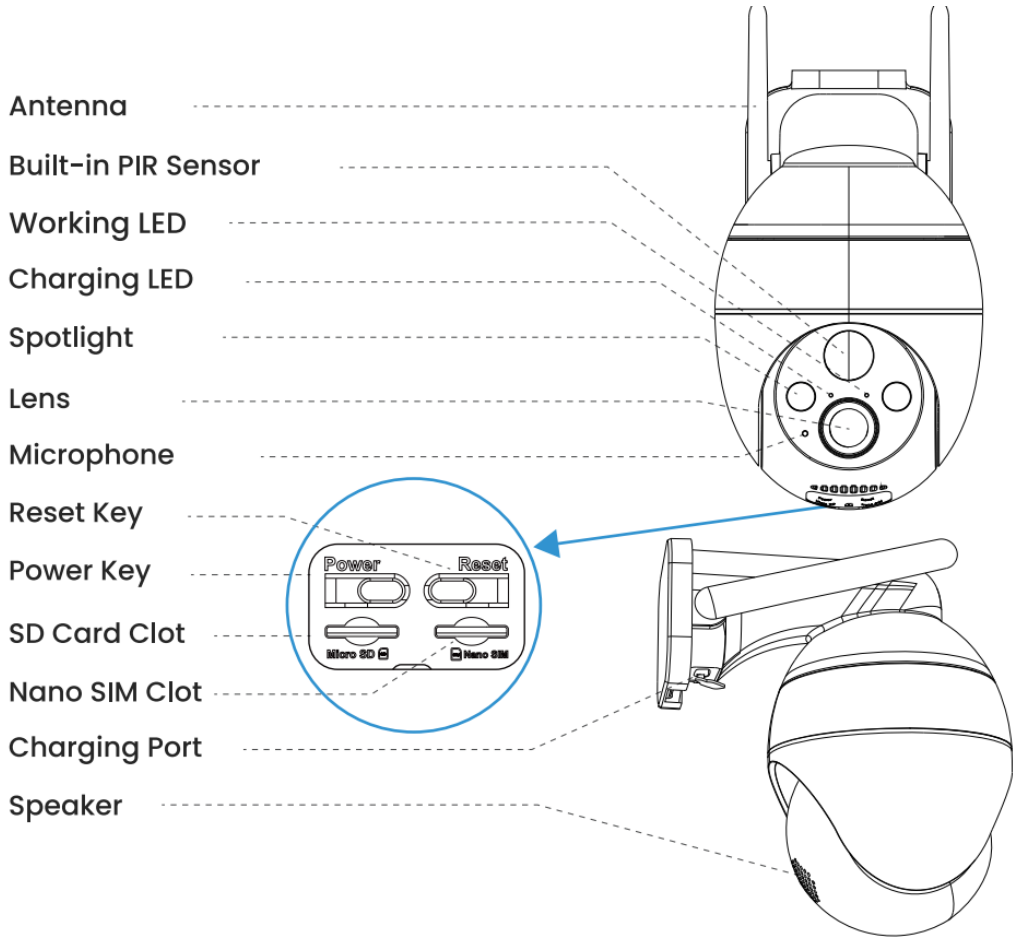

Power Key	Press and hold the power button for 5 seconds to turn on the camera
Reset Key	Press and hold RESET for 5 seconds to reset the device (If you have modified the settings, they will revert to the factory default settings)
SD Card Slot	Support local SD card storage (up to 128G)
SIM Card Slot	Support Nona SIM Card
Lens	Support FHD 2K resolution
Power Light	Red means charging is in progress Blue means charging is complete
Microphone	Capture sound for your videos
PIR Sensor	Can detect moving objects up to 10 meters away
Working Status Light	Red light continuously on: camera network abnormal Red light flashing slowly: waiting for Wi-Fi connection Red and blue lights flash alternately: SIM card recognition failed Blue light flashing slowly: SIM card recognition is successful
Speaker	Two-way voice call sound output

Charge Port	Use 5V/2A power supply to charge the camera
Thumb Screw	For fixing the camera and the bottom bracket
Antenna	4G dedicated signal antenna

Download and Register APP

1. Download "CloudEdge" APP

Search " CloudEdge" in App Store or Google Play, or scan the QR code below to download and install it on your smartphone.

Note: For old users, please update the APP to the latest version.

Download on the App Store

GET IT ON Google Play

2. APP Permission Settings

When using the application for the first time, please turn on the following 2 permissions.

① Allow "CloudEdge" to access mobile cellular data and WLAN, otherwise you will not be able to add devices.

② Allow "CloudEdge" to receive messages, otherwise the phone will not receive alert push notifications when motion detection or audible alerts are triggered.

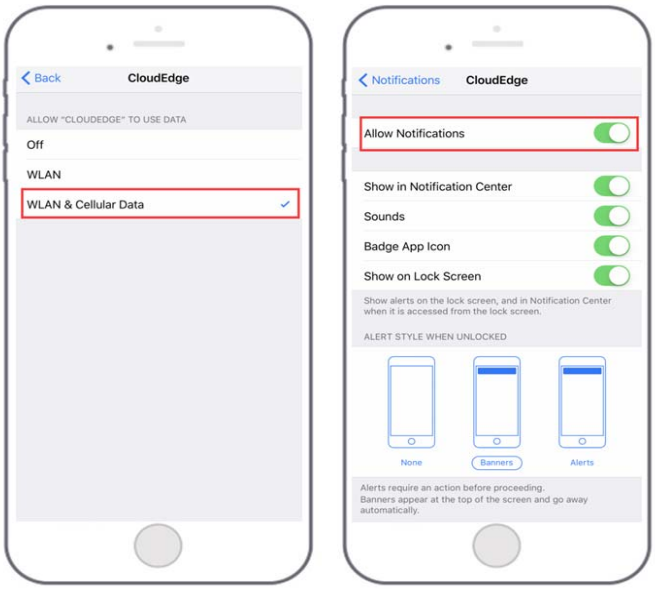

* The following is a screenshot of IOS cell phone operation, Android cell phone permissions open method is basically the same as this method.

3. Register Account

New users must register by email, the concrete steps are as follows:

1. Click on "Register";2. Follow the steps to complete your account registration; 3. Login.

Tip: ①Please use the correct e-mail. ②Please select the correct country code. ③When registering for a new account, please select the region where you are actually located. (Cameras cannot be shared between different registration regions.)

Choice SIM card

① A SIM card is included in the camera box, and this card supports the major carrier networks in your country.

It has the advantages of easy installation and use, fast and convenient data recharge, strong network compatibility, strong 4G signal, strong compatibility with the camera, no need to sign an agreement with the operator, etc. It is recommended for you to use it.

Note: This SIM card is only compatible with this camera, please do not insert it into a smartphone or other electronic products.

② If you need to configure a SIM card of a local operator, please refer to the following list to choose:

Contraries	Recommended Carriers	Frequency Bands Supported by the Camera
United States	Verizon/AT&T/T-Mobile	LTE-FDD:B2/B4/B5/B12/B13/B14/B66/B71
Unites Kingdom	O2/Vodafone/EE/Three	LTE-FDD:B1/B3/B5/B7/B8/B20/B28 LTE-TDD:B38/B40/B41
Germany	Telekom/Vodafone/Telefónica	
France	Orange/Bouygue/SFR/Free	
Spain	Vodafone/Orange/Movistar	
Italy	Vodafone/TIM/WindTre/Iliad	
Other Countries of Europe	Choose from local mainstream operators	

Note:

* The camera does not guarantee the compatibility of the SIM cards of carriers other than those listed in the above list, please choose carefully. The camera only uses data traffic and will not use services such as calls/texts.

* Some cards have a PIN code that you can disable first with your smartphone. Do not insert an IOT or M2M SIM card into your smartphone.

* Cameras purchased in this country cannot be used in other countries because of different 4G frequency bands. Cameras purchased in Europe are supported by the countries marked on the SIM card manual.

Insert the SIM Card

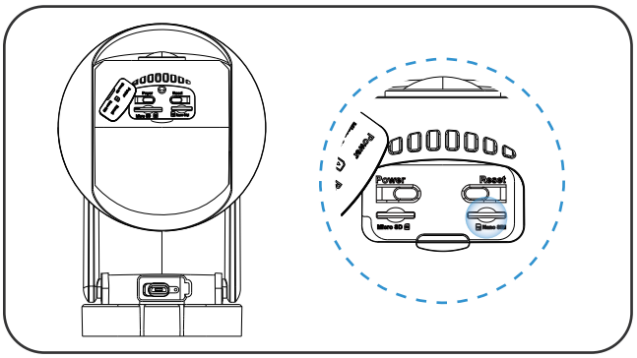

The SIM card slot is located in the rubber cover under the camera lens, please remove the rubber cover first.

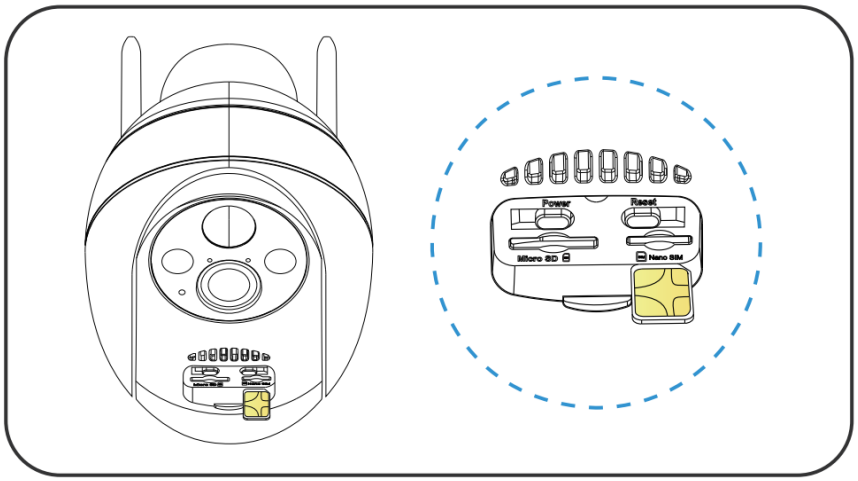

When choosing a Nona SIM card to insert it into the SIM card slot, please remember: the side with the gold contacts is facing up, and you need to push the trimmed notch into the SIM card slot and press it all the way in.

If it is difficult to operate, please use the SIM card tweezers in the camera box.

Note: Do not insert the SIM card into the card slot backwards. It will cause the SIM card not to be recognized, and the SIM card will be stuck inside and cannot be pulled out.

Power On the Camera

After inserting the SIM card, press and hold the power button of the camera for 3 seconds until the working indicator on the side of the lens lights up in red, then let go.

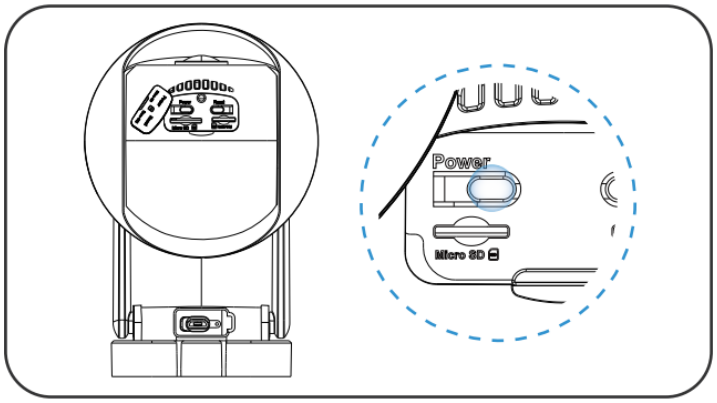

Wait for about 30 seconds until the working indicator turns red and blue and flashes alternately, you will hear the voice prompt "Waiting to connect", which means the camera has successfully connected to the 4G network, and the next step is to add the camera in the APP.

Add the Camera On the Phone

Step 1: Move the camera and smartphone to a location with a good mobile network signal, and make sure there are no signal interferes around.

Step2: Run the "CloudEdge" application, click and select**"4G Camera"**.

Step 3: Follow the prompts to ensure that that the camera has been inserted into the SIM card and turned on (the indicator light turns blue and flashes).

Step 4: Aim the QR code of the mobile phone directly at the camera lens. Keep a distance of 15-25 cm (5-8 inch) and do not move. After hearing the "Bugu" sound from the camera until the QR code is successfully recognized, click the "Hear the sound" button .

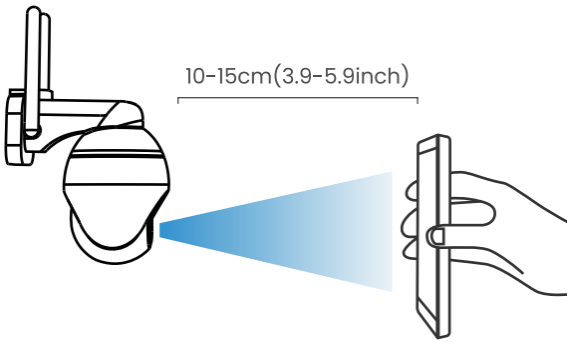

Step 5: After you click "Hear the sound", the camera will start connecting to smartphone. Once the connection is complete, the app will jump to the "Device Found!" page where you can edit the camera name, andthen click "Done". Please read the installation instructions of the camera carefully. When installing the camera

later, it can help you avoid some wrong operations.

Add failed? Please refer to the following to resolve the issues:

Camera voice prompt	Working light status	Camera status	Solutions
Wait for add timeout	Indicator light off	If the network is not configured for a long time, the device will automatically sleep	Press the power button to restart
SIM card not found	The red and blue lights flash alternately and then turn off	The camera does not recognize this SIM card	Check whether the SIM card is inserted in the correct direction 2. Check whether the SIM card is not fully inserted, and reinsert it
SIM card cannot be used	Red and blue lights flash alternately	Camera cannot register to carrier network	1. Please check whether the SIM card has a PIN code, insert the SIM card into the mobile phone and disable the PIN (do not insert the camera's own SIM card into the mobile phone). 2. Check whether your SIM card has been activated, if not, please contact the operator to activate the SIM card (the camera comes with a SIM card, please contact the brand's customer service staff). 3. Check if your SIM card data is sufficient 4. The signal may be weak at the current location, please move the camera to a position with better signal.

No LTE signal	Red and blue lights flash alternately	SIM card has run out of data	Please check if your SIM card's data plan is available
APN not matched	Red and blue lights flash alternately	The camera is not compatible with the APN of the SIM card	Please import the APN of the SIM card into the camera in the APP (for details, please refer to the following content)

Note: If you try to add a camera several times and still fail, please contact the brand's customer service staff for help.

APN Settings

① Only using the local SIM card, there is a probability that the APN cannot be recognized. When the camera plays the voice of "Unrecognized APN", add a page of "4G camera" in the APP, click "Blinking red and blue lights" → select "Enter current SIM card APN information" to enter the APN setting page.

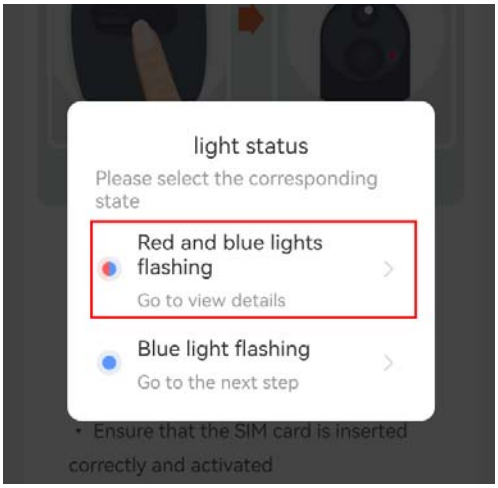

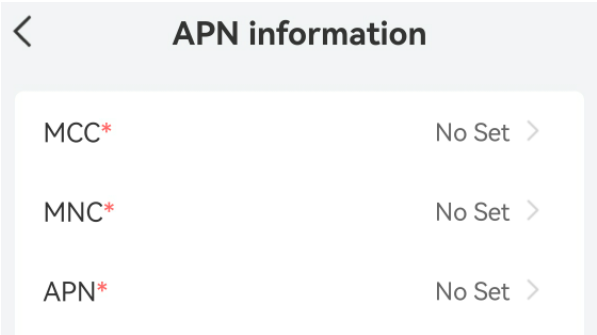

② Just enter the corresponding information in the first three columns "MCC", "MNC" and "APN". If you do not know the APN information of the SIM card, please consult the card operator for assistance.

After successfully importing the APN, please re-add the 4G camera.

Charge the Camera

It is recommended to fully charge the camera battery before installing the camera outdoors.

Charge the camera with a standard and high-quality 5V power adapter (not included).

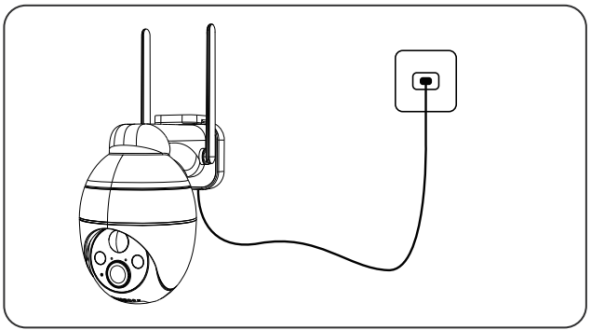

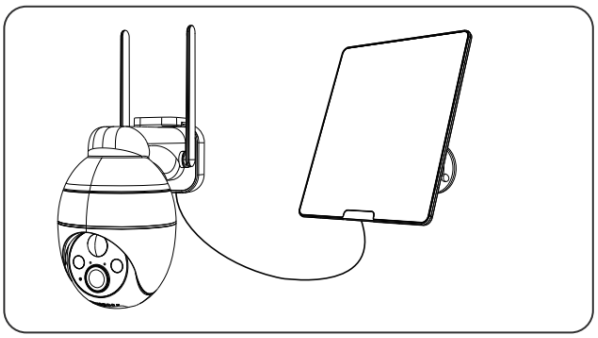

Use the solar panel to charge the camera.

Charging indicator (at the top left of the lens):

Red LED: Charging Blue LED: Charging completed

Note: For better weather resistance, insert the charging port of the solar panel into the rubber plug, and the rubber plug fully covers the charging port.

Safety Reminder: Do not use a non-5V power adapter to charge the camera, and do not charge near fire and heaters. If the battery emits odor, heat, deformation and other abnormal conditions during the charging process, please stop charging or use it immediately.

Install the Camera

Notes before installation:

① In order to ensure that the camera can obtain a good network signal, please install the camera in a location with good signal and no signal interference

② In order to avoid frequent alarms and rapid battery consumption, do not point the camera directly at the road or in crowded places.

③ Make sure there are no reflections within 5 feet (1.5 meters) of the PIR sensor, otherwise it will interfere with the normal function of the sensor.

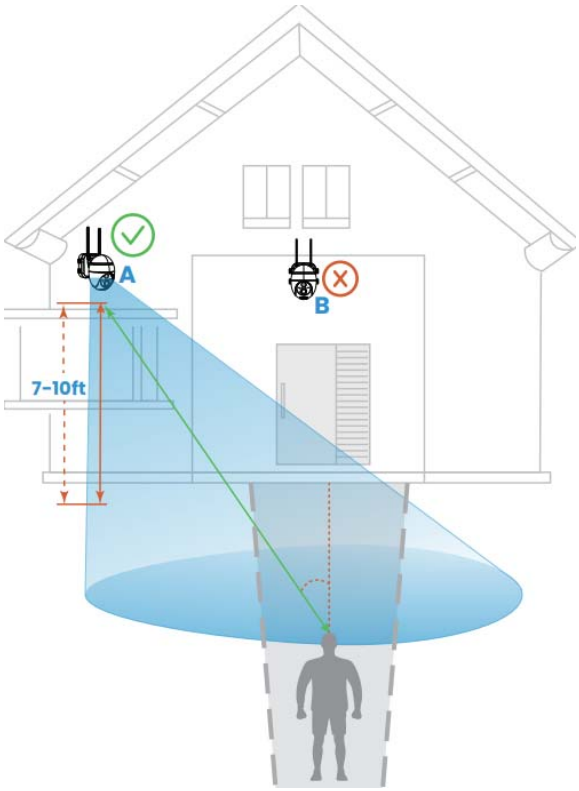

④ For outdoor use, the camera must be installed forward for better waterproof performance and better PIR motion sensor efficiency

⑤ In order to ensure better waterproof performance, after installation, please ensure that all rubber plugs on the surface of the camera are covered

⑥ In order to better connect the 4G network, it is recommended to install the antenna upward or horizontally.

⑦ Install the camera 2-3 meters (7-10ft) above the ground. This height maximizes the detection range of the PIR motion sensor.

⑧ Do not place the camera exactly in the direction of the intruder's movement. The angle formed by the connection between the PIR sensor and the intruder and the intruder's walking route must be greater than 20 degrees.

Note: As shown in the picture, the red dotted line is the usual intrusion path of the intruder, then point A is the best installation location for the camera, if it is installed at point B, it may cause a missed alarm.

Installation Step:

Step 1: Use Power Drill and two screws to fix the camera bracket on the wall. It is recommended that the bracket be 7-10 ft above the ground (2-3 meters) **Step 2:** Clip the camera base into the bracket from top to bottom, and the installation is completed..

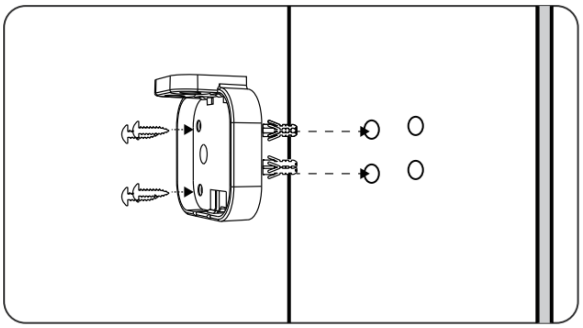

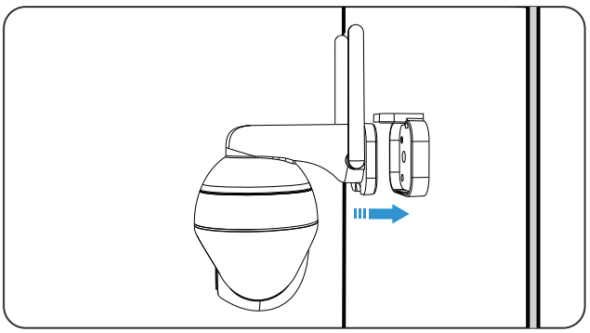

Note: To remove the camera from the wall, press the snap position under the bracket with your finger, and then pull out the camera.

Install the Solar Panel

Please use the plastic brackets and screws included in the box to install the solar panel.

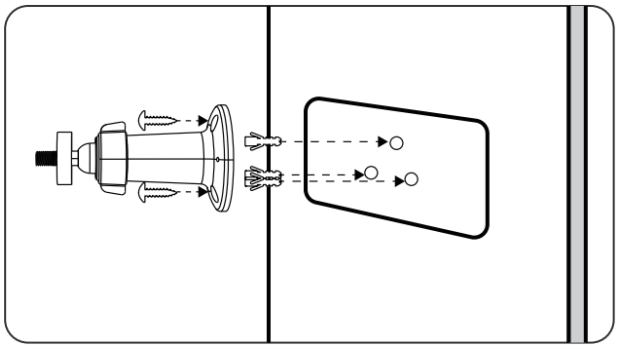

Step 1: Using the power rill and screws, fasten the plastic bracket of the solar panel to the wall.

Note: In order to obtain the best charging efficiency, the solar panel must be installed in a location with sufficient sunlight (it is recommended that there be no light shielding around), and the daily light time can be guaranteed to be more than 4 hours.

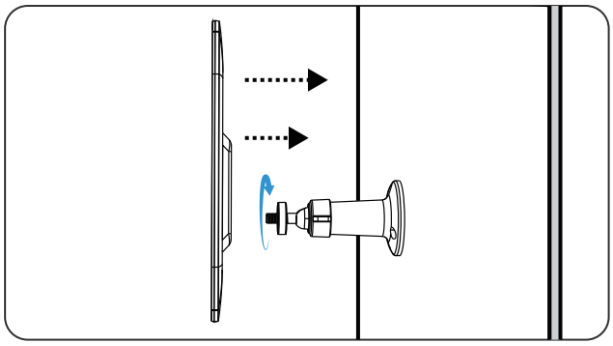

Step 2: Align the screw cap of the bracket with the screw hole on the back of the solar panel and rotate it clockwise to fix it.

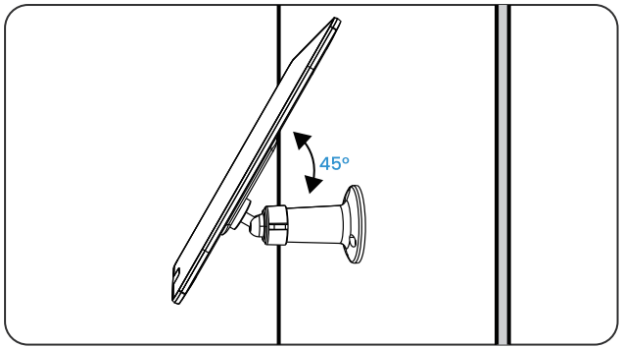

Step 3: Adjust the angle of the solar panel according to the actual environment, and ensure that the front of the panel is facing up (45° angle is the best inclination angle).

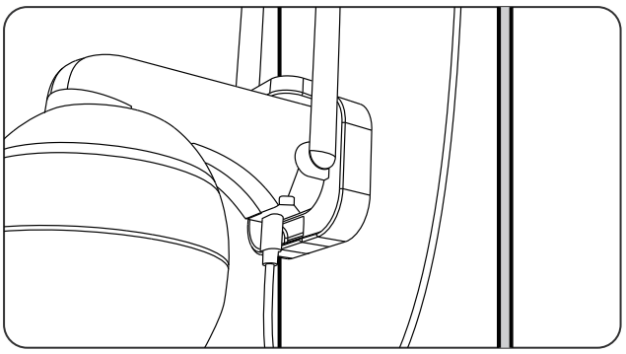

Step 4: Unplug the rubber plug on the surface of the camera charging port, insert the solar panel charging head through the hole on the rubber plug, and then insert it into the camera

charging port correctly.

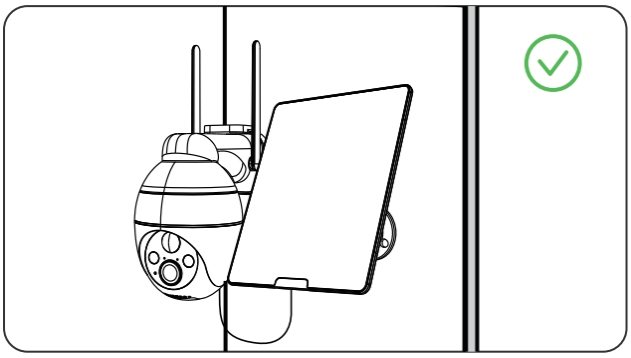

Step 5: For better waterproof performance, please cover the charging port completely with the rubber plug.

Note: To ensure the charging efficiency of the solar panel, please clean the panel surface regularly.

Note: In rainy days and cold winters, the charging efficiency of the solar panel will be very low. If the battery of the camera will run out, please remove the camera, take it indoors and use the 5V power adapter to fully charge it, and then install it back.

How do Others Use the Camera?

In order to ensure the security of the camera, the camera is only allowed to be added by one account. If others need to access the camera simultaneously, they can use the "Device Share" function.

Sharing Steps:

① Others first download and install the camera's APP, register a new account and log in (the country selected during registration must be the same as your choice).

② You click "Device Share" in the APP, please watch the operation video first, and follow the video steps to complete the sharing.

Tip: When sharing, you need to select the permission of the camera, please choose according to actual needs.

③ He will receive a push message on his APP, click "Accept" to complete the sharing.

Video Management

The camera needs a Micro SD card (not included) to store video files. Insert the Micro SD card into the SD card slot of the camera correctly.

SD card requirements:

① Recommend the use of brand name cards such as San Disk, Samsung, etc.

② Support 2-128GB capacity;

③ Recommend the use of standard Class 10 SD cards.

④ Only FAT32 format is supported (you can select FAT32 to format the SD card after inserting the SD card into the computer).

*When the camera detects an intruder, it will automatically save the video file to the SD card.

How to download SD card video to mobile phone or computer?

① When playing the historical video in the APP, select the video clip you want to download, and click Download.

② After inserting the SD card into the computer or mobile phone, look for the required video files. The video file is in MP4 format, and you can play it directly with the player.

PIR Detection and Message Push

In order to obtain the alarm message push function, please enable the push permission of the APP in the mobile phone system.

The camera has a wealth of motion detection setting options, including: "motion detection sensitivity", "work mode", "alarm plan", "alarm area setting", "AI humanoid detection" and other functions.

Enter the application, select the device, and enter "Parameter Settings" → "Alarm Management" to flexibly set the camera's alarm detection function.

Introduction to PIR motion detection sensitivity:

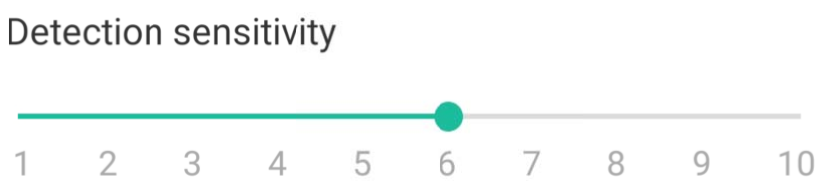

1-3 belongs to the low gear sensitivity, motion detection distance of 3-5 meters.

4-7 belongs to the low gear sensitivity, motion detection distance of 5-7 meters.

8-10 belongs to the low gear sensitivity, motion detection distance of 7-10 meters.

Introduction of AI humanoid detection function:

In "Alarm Management" → "Custom Mode", there are two options of "Daytime Humanoid Detection" and "Night Humanoid Detection", and the camera is turned on by default. After the humanoid detection function is turned on, the camera will start an alarm when only humanoids are moving, and vehicles/animals will not be detected. If you need the camera to detect vehicles and animals normally, please turn off human detection.

You may encounter the following situations:

Problems and failures	Solutions
The phone receives frequent alarm messages	①Reduce the sensitivity of motion detection ②Enable the humanoid detection function ③Set the alarm area ④Avoid the camera facing the roadside or crowded places
There are no moving objects in the alarm picture	①Reduce the motion detection sensitivity ②Enable the humanoid detection function
Someone passed by without alarms	①Check whether the message push permission is enabled ②Increase the sensitivity of motion detection ③Prevent intruders from walking vertically to the camera
Frequent leakage alarms at night	① Make sure the image quality at night is normal ② Turn off "Night Humanoid Check"
Mobile alarm is not timely, obviously delayed	①Increase the sensitivity of motion detection ②Avoid intruders from walking vertically to the camera ③Check whether the network of the camera and mobile phone is good

Battery Life and Safety Instructions

This camera is not designed for 24/7 operation and 24/7 recording, but designed for

recording sports events, which can be viewed remotely only when you need it.

Reasons for short battery life	Solutions to improve battery life
The PIR sensor is frequently triggered, repeatedly waking up the camera to work.	①Reduce the sensitivity of motion detection. ②Enable the humanoid detection function. ③Set the alarm area ④Avoid the camera facing the roadside or crowded places.
Frequent and long-term remote viewing of videos on mobile phones	Reduce the frequency and time of watching videos remotely
The network is very poor, causing the camera to search the network frequently and automatically	Determine whether the 4G network signal around the camera is poor, avoid objects that interfere with the signal around, and move the camera to a position with better signal
In low temperature and cold weather, battery performance will be reduced and solar charging efficiency will decrease	In cold weather, reduce the sensitivity of motion detection, turn on the humanoid detection function, set the alarm area, and reduce the working time of the camera
Inefficient or no charging of solar panels	① Ensure that the solar panel can receive sufficient sunlight ② Check whether the solar panel is faulty ③ Regularly clean the surface of the panel ④ Check whether the charging port is in poor contact or faulty
Camera consumes power faster than solar charging efficiency	Refer to the solution above

Reminder: If the above attempts still cannot solve the problem of short battery life, please contact the customer service staff of the brand manufacturer for help.

Battery Safety Instructions:

* If the battery of the camera is about to run out, please remove the camera, take it indoors and use the 5V power adapter to fully charge it, and then install it back.

* Do not violently damage the battery with sharp tools, it may cause battery failure.

* Please keep the camera charging port dry and clean, and protect the charging port with a rubber stopper when fully charged.
* Please use a standard and high-quality 5V power adapter to charge the camera, please do not use a non-5V power adapter to charge the camera.
* Do not charge, use or place the camera near fire and heaters, if the battery emits abnormal conditions such as odor, heat, deformation, etc., please stop charging or use it immediately.

FAQs

For more detailed FAQs, please log in the APP, "Me"-"Hele"-"4G Camera".

Q: The camera cannot be turned on?

A: ① Make sure the camera is fully charged. Please use the 5V power adapter to fully charge the camera before turning it on. ② If the camera is faulty or water has entered, please contact the customer service staff of the brand manufacturer for help.

Q: Failed to add camera?

A: Please go back to page N to find solutions, or contact the customer service personnel of the brand for help.

Q: After the first use for a period of time, the camera fails to connect to the internet?

A: ① If you use the SIM card that comes with the camera, only a 100M data plan will be given for free. To avoid running out of data, please replenish the data plan in the APP in time. ② Please check whether the SIM card data plan is normal, such as arrears, excessive data usage, etc., and regularly supplement the data plan for the SIM card. ③ Please check whether the 4G network signal around the camera is good, and avoid signal interference around. ④ Check whether the SIM card is loose.

Q: The camera drops frequently and cannot be connected?

A: ① Please check whether the 4G network signal around the camera is good, and avoid signal interference around. ② Check whether the SIM card is loose. ③ Check whether the 4G network of your SIM card operator covers the installation location of

the camera. It is recommended to try the SIM card that comes with the camera.

Q: Can't the mobile phone receive the alarm push message?

A: ① Check whether the message push permission of the app has been enabled in the system settings of the mobile phone. ② Restart the phone, and the Android phone will try to clear the cache. ③ Check whether the camera has the motion detection function enabled. ④ Check whether the network of the camera and mobile phone is good. ⑤ Check whether the camera is online, and check whether the SIM card data plan is normal, such as arrears, excessive data usage, etc.

Q: Motion detection missed alarm?

A: ① Increase the motion detection sensitivity of the camera. ② Please install the camera correctly to prevent intruders from walking vertically to the camera. (For the solution, please refer to the text of "Installing the Camera" in the manual). ③ If you need to detect vehicles or animals, please turn off the "AI humanoid detection" function.

Q: Can the camera connect to Wi-Fi?

A: Wi-Fi is not supported, only 4G network is supported.

Q: How much data does the camera consume per month?

A: The traffic consumed by the camera depends on the resolution you select when viewing. The higher the resolution, the greater the traffic consumption. The longer the preview video and video playback time, the greater the data consumption. The more times the PIR sensor is triggered, the greater the flow digestion. We recommend that you subscribe to a 2-4G/month data plan package.

Q: The subscription data plan package does not take effect, or do I need to transfer the package and refund the fee?

A: ① If you use the camera's own SIM card, please contact the customer service staff of the camera's brand manufacturer for help. ② If using a local SIM card, please contact the operator for assistance.

FCC Warning Statement

Changes or modifications not expressly approved by the party responsible for compliance could void the user's authority to operate the equipment. This equipment has been tested and found to comply with the limits for a Class B digital device, pursuant to Part 15 of the FCC Rules. These limits are designed to provide reasonable protection against harmful interference in a residential installation. This equipment generates uses and can radiate radio frequency energy and, if not installed and used in accordance with the instructions, may cause harmful interference to radio communications. However, there is no guarantee that interference will not occur in a particular installation. If this equipment does cause harmful interference to radio or television reception, which can be determined by turning the equipment off and on, the user is encouraged to try to correct the interference by one or more of the following measures:

-- Reorient or relocate the receiving antenna.

-- Increase the separation between the equipment and receiver.

--Connect the equipment into an outlet on a circuit different from that to which the receiver is connected.

-- Consult the dealer or an experienced radio/TV technician for help.

This device complies with part 15 of the FCC Rules. Operation is subject to the following two conditions: (1) This device may not cause harmful interference, and (2) this device must accept any interference received, including interference that may cause undesired operation.

RF Exposure Statement

To maintain compliance with FCC's RF Exposure guidelines, This equipment should be installed and operated with minimum distance of 20cm the radiator your body. This device and its antenna(s) must not be co-located or operation in conjunction with any other antenna or transmitter.