UNIZ

USER MANUAL

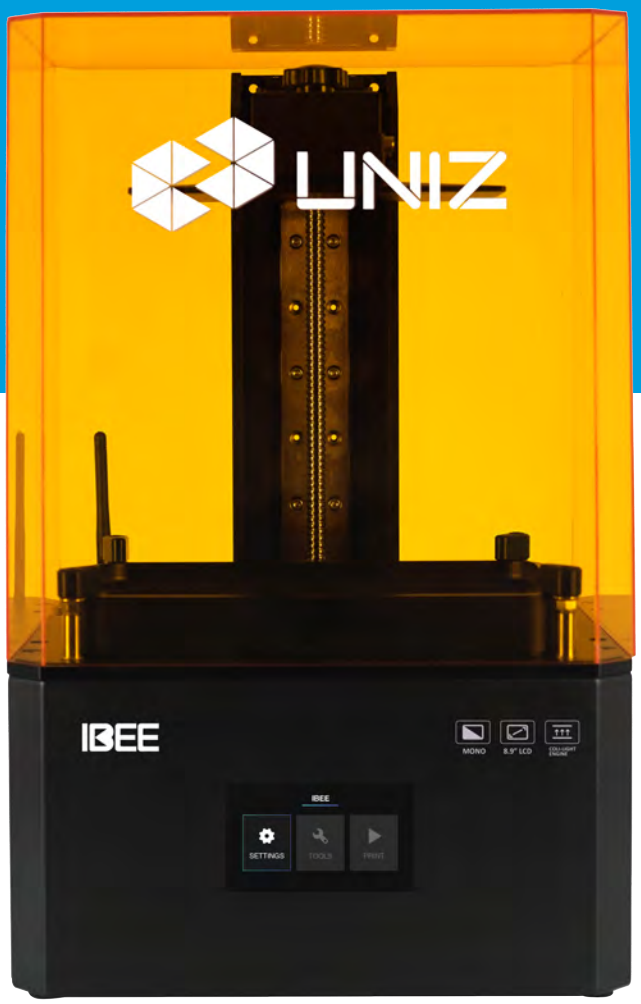

APPLICABLE TO

IBEE

UNIZ DESKTOP PRINTER

DISCLAIMER

Please read and understand the contents of this installation and user manual.

Failure to read the manual may lead to personal injury, inferior results or damage to the IBEE printers. Always make sure that anyone who uses the 3D printer knows and understands the contents of the manual to make the most out of the IBEE printer.

The conditions or methods used for assembling, handling, storage, use or disposal of the device are beyond our control and may be beyond our knowledge. For this and other reasons, we do not assume responsibility and expressly disclaim liability for loss, injuries, damage, or expense arising out of or in any way connected with the assembly, handling, storage, use or disposal of the product. The information in this document was obtained from sources which we believe are reliable. However, the information is provided without any warranty, express or implied, regarding its correctness.

Intended use

IBEE Series 3D printers are designed and built for liquid crystal display (LCD) based on Stereo lithography Appearance (SLA) modeling for various high quality photopolymer resins within a commercial/business environment. The combination of precision and speed makes the IBEE 3D printers the perfect machines for concept models, functional prototypes and also the production of small series.

UNIZ does not warrant that the operation of the Hardware Product will be uninterrupted or error-free. UNIZ is not responsible for damage arising from failure to follow instructions relating to the Hardware Product's use.

UNIZ′s warranty does not apply: a) to damage caused by use with non-UNIZ products including third-party resins; b) to damage caused by accident, abuse, misuse, flood, fire, earthquake, or other external causes; c) to damage caused by operating the Hardware Product outside the permitted or intended uses described by UNIZ; d) to damage caused by service (including upgrades and expansions) performed by anyone who is not a representative of UNIZ; e) to a Hardware Product or part that has been modified to alter functionality or capability without the written permission of UNIZ; f) to consumable parts, unless damage has occurred due to a defect in materials or workmanship; g) to cosmetic damage, including but not limited to scratches, dents; or h) if any UNIZ serial number has been removed or defaced. THIS WARRANTY GIVES YOU SPECIFIC LEGAL RIGHTS, AND YOU MAY ALSO HAVE OTHER RIGHTS WHICH VARY FROM STATE TO STATE OR COUNTRY TO COUNTRY. UNIZ's RESPONSIBILITY FOR HARDWARE DEFECTS IS LIMITED TO REPAIR OR REPLACEMENT SERVICE AS DETERMINED BY UNIZ IN ITS SOLE DISCRETION.

TABLE OF CONTENTS

A IBEE 3D PRINTER 1

MEET THE PRINTER 1

SPECIFICATIONS 3

B GET STARTED 4

UNBOXING 4

SOFTWARE PREPARATION 6

C INTERFACE INFORMATION 7

MAIN INTERFACE 7

SETTINGS 7

TOOLS 8

PRINT 10

MORE DETAILS 11

D USAGE AND MAINTENANCE 13

PRINTER PLACEMENT AND LEVELING 13

BUILD PLATFORM 13

RESIN TANK 19

CHANGE LCD PROTECTIVE FILM 24

CLEAN AIR FILTER 26

E CONTACT US 27

A IBEE 3D PRINTER

This user manual is designed to help you start your IBEE printer experience. Learn everything about using your 3d printer by following the instructions in this user manual and experience how easy it is to produce great quality prints.

You might be familiar with other types of 3D printers. Regardless, it is still essential that you read this manual carefully in order to make the most out of your 3d printer.

MEET THE PRINTER

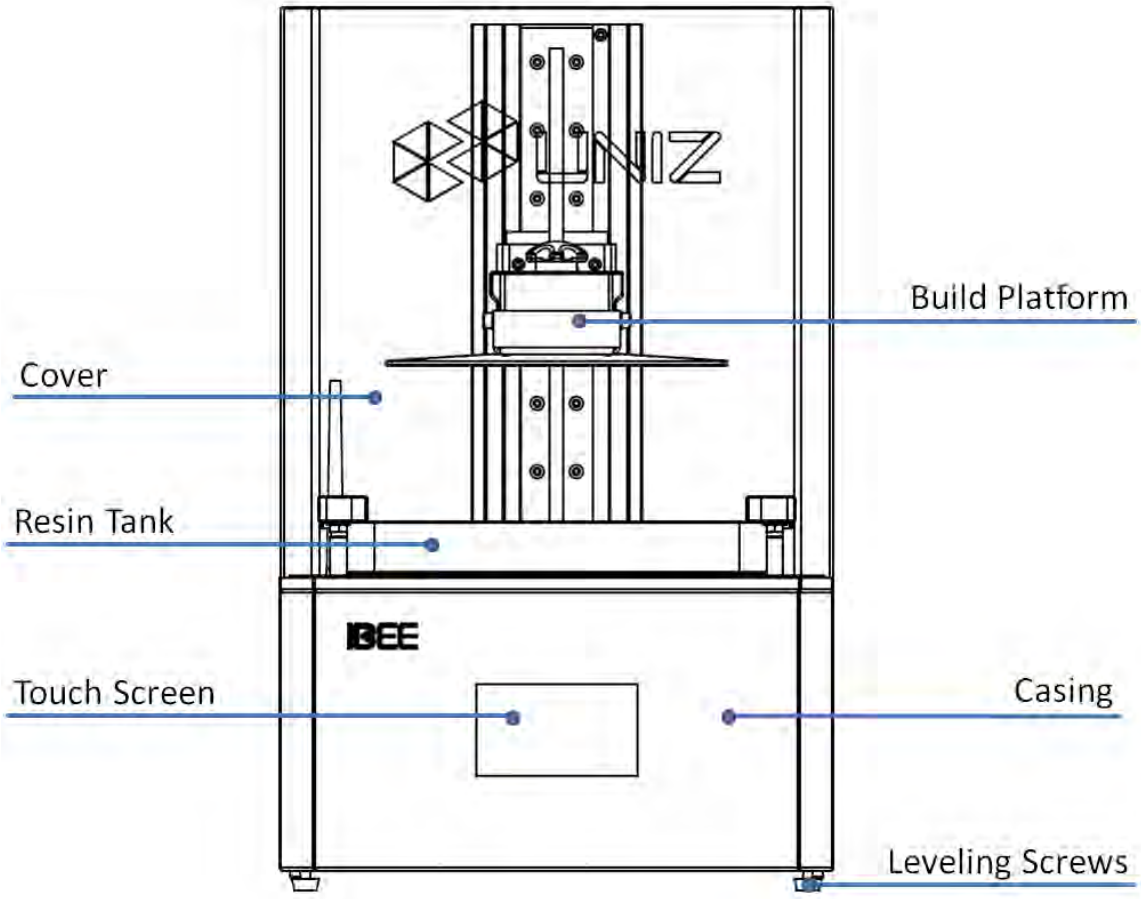

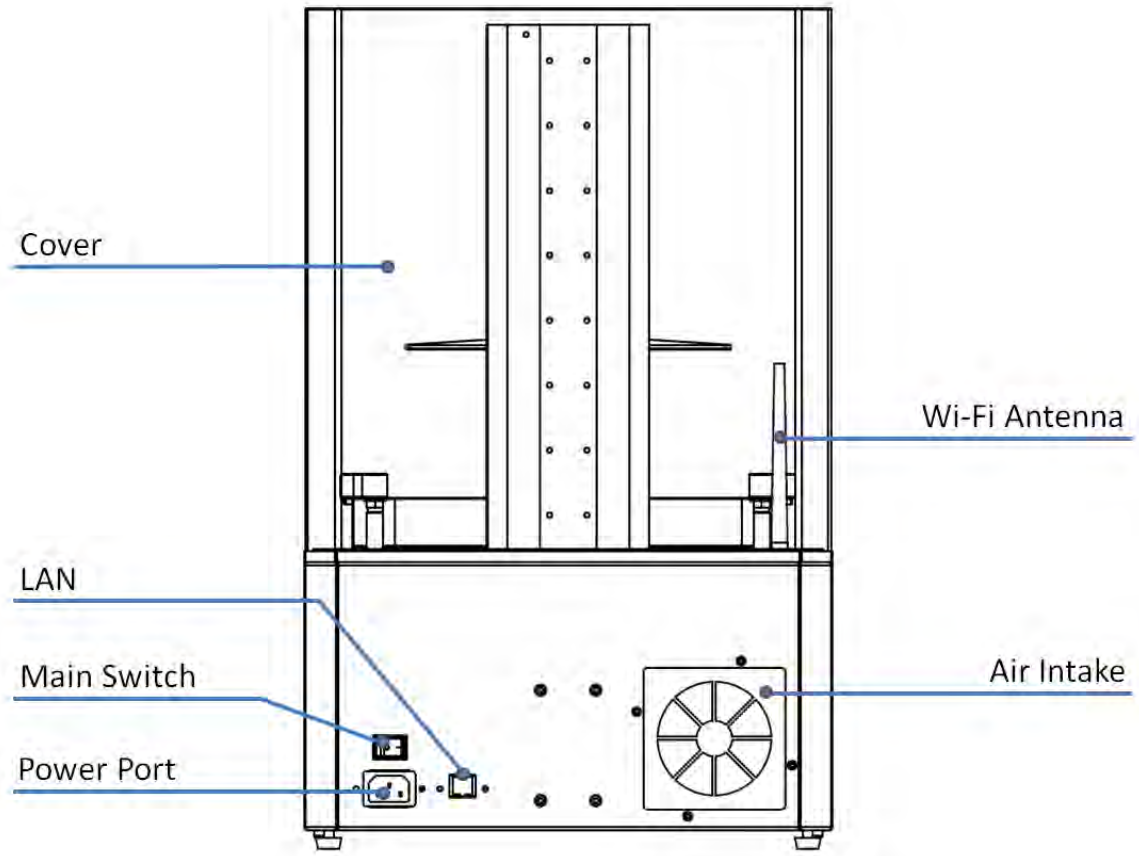
Cover
Wi-Fi Antenna
LAN
Main Switch
Air Intake
Power Port

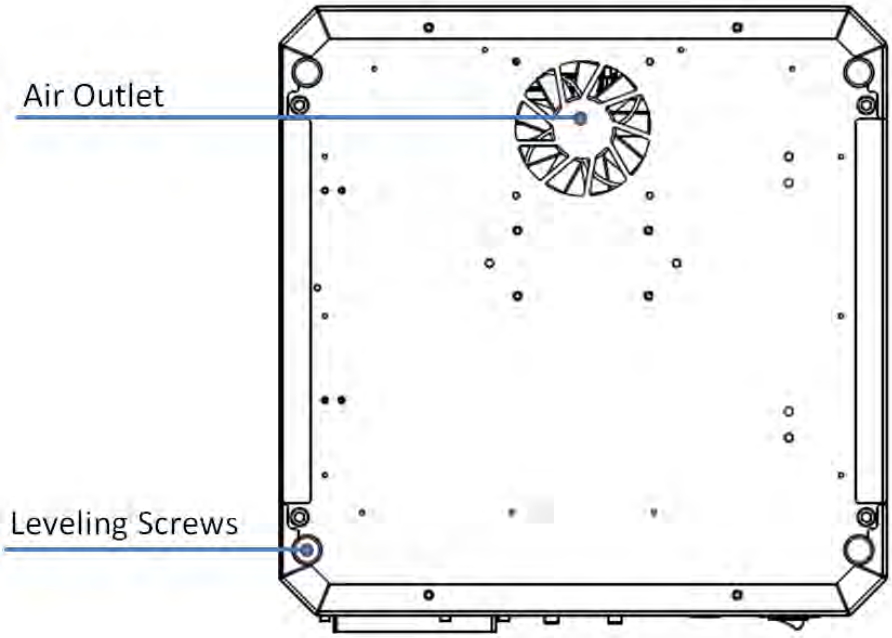
Air Outlet
Leveling Screws

SPECIFICATIONS

IBEE		
PRINTING	Printing Technology	LCD Stereo lithography
	Build Volume	192 × 120 × 220mm 7.5" × 4.7" × 8.7"
	XY Resolution	49.8μm
	Maximum Accuracy*	±10μm
	Layer Thickness (Z resolution)	25, 50, 100μm
	Separation Mechanism	Polymer film natural peel Up to 100x more durable than PDMS
	Support	Uniz smart support technology
	Printing Speed	Up to 80 mm/hr.
HARDWARE	Dimension/Weight	325 × 325 × 510 mm [W×H×D] 12.8" × 12.8" × 20", 15.8KG/34.8LB
	Operating Temperature	Suggested 18–28° C (64–82° F)
	Power Requirement	110V 2A/220V 1A
	Optical System	4th Generation Collimated light source
	Mechanical	Cast Aluminum & CNC, Sheet metal
	Connectivity	USB flash disk, Wi-Fi, Ethernet
DESKTOP SOFTWARE	System Requirement	Windows 7 and up (64-bit only), Mac OS X 10.7 and up (64-bit only), 16GB RAM, OpenGL 2.1, Discrete Graphics
	Advanced Features	Built-in advanced model repair, Ultra large file support (1GB+)
	Compatible Format	STL, OBJ, AMF, 3MF, SLC
	Slice Format	zcode

* Maximum accuracy only achievable at integer multiples of smallest pixel sizes.

B GET STARTED

Now your IBEE printer has arrived and you're ready to unpack it and set it up! Carefully unpack your printer and set it up according to the following instructions. Please keep the original box and protectors in case of future shipping or storing.

UNBOXING

The IBEE comes in reusable, durable packaging that has been specially designed to protect your printer in transport. To get the SN number of your printer, you may scan the QR code on the box. To properly unpack your printer, please follow the steps described below.

START UNBOXING

Start unpacking by correctly orienting the cardboard box, and then slide the foam packaging out of the box by pulling the cardboard handle beneath the printer while holding the box.

REMOVE THE PROTECTION FOAM

Remove the protection wrap around the machine. Take out the printer and place it on your desk. Make sure you hold it by the sheet metal casing while carrying it.

PUT IT ON THE DESK

Place the printer on a leveled and clean desk. Adjust the four leveling screws under the printer to level it.

GET THE ACCESSORIES

Under the Build Platform, you will find a box with accessories inside. Take these out and put them aside.

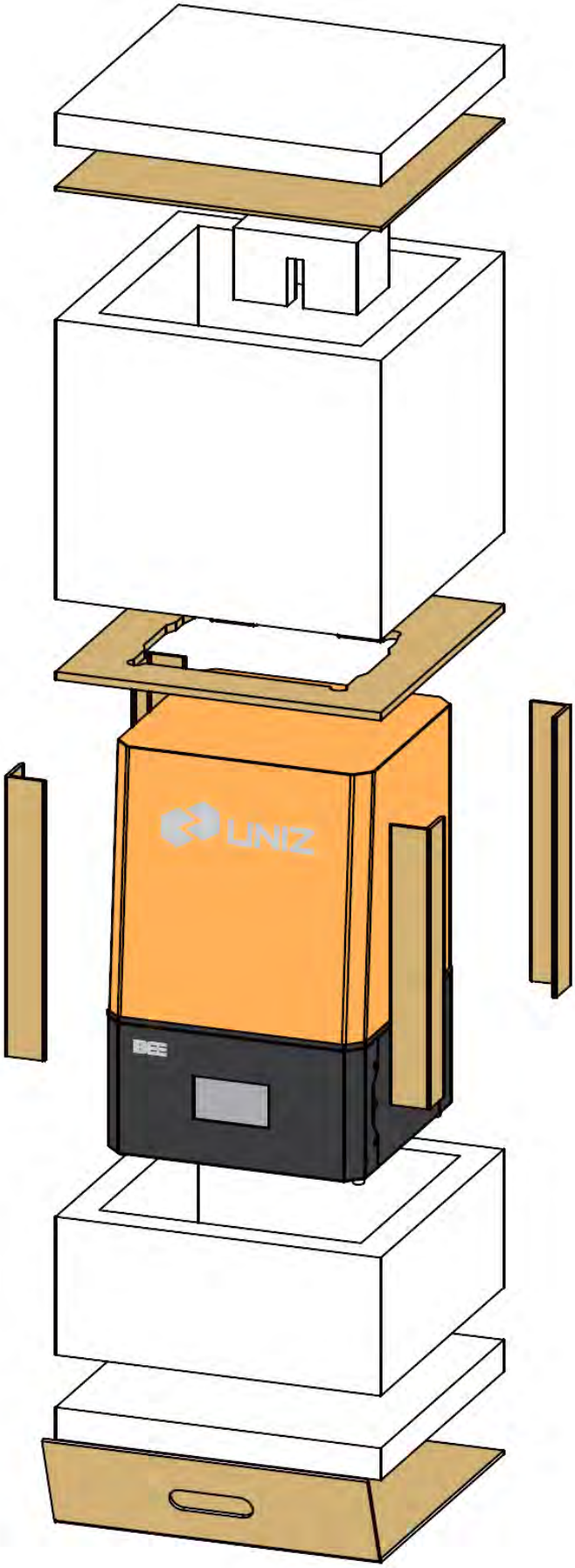
UNIZ
BEE

SOFTWARE PREPARATION

Open a browser and go to URL *https://www.uniz.com/software* to download UNIZ Maker software.

Choose the software according to your system and download it.

INSTALLATION

Windows

UNIZ Maker supports Windows 7 and above. Please use the following steps:

1. Double click the installation program.

2. Check the user agreement, and then follow the prompts to finish the installation.

Mac

UNIZ Maker supports Mac OS X 10.7 and above. Please use the following steps:

1. Double click the installation program.

2. Agree to the user agreement.

3. Drag UNIZ to your Applications folder.

Note: Once your computer is connected to the Internet, UNIZ Maker will detect new versions automatically and prompt whether you wish to update.

C INTERFACE INFORMATION

You may check device information, control the printer, and start printing projects using the touch screen on the front of IBEE.

MAIN INTERFACE

There are three main functions: Settings/Tools/Print.

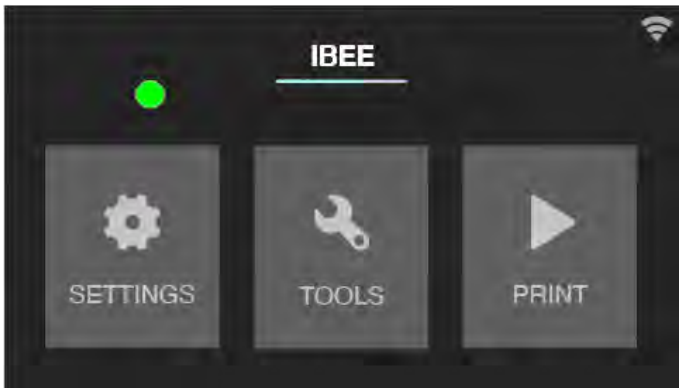

Note: Some functions have 1~3 pages to introduce the details. Please read carefully and follow the instructions.

SETTINGS

SET LAN

SET WIFI

UPGRATE OR RESET

You can read or scan to get the SN of your printer here.

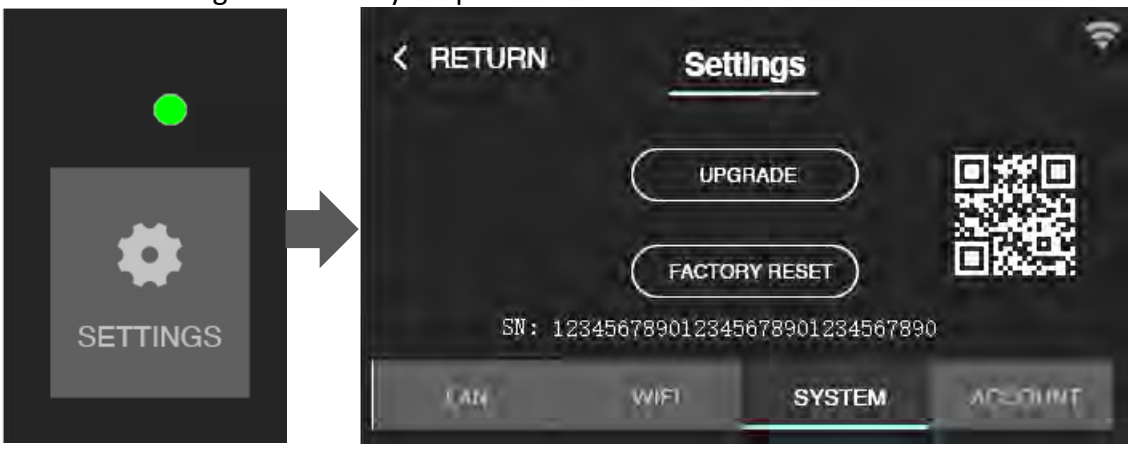

LOGIN ACCOUNT

Login an account to register your printer to UNIZ cloud. Then you can monitor the printer remotely.

TOOLS

LCD TEST

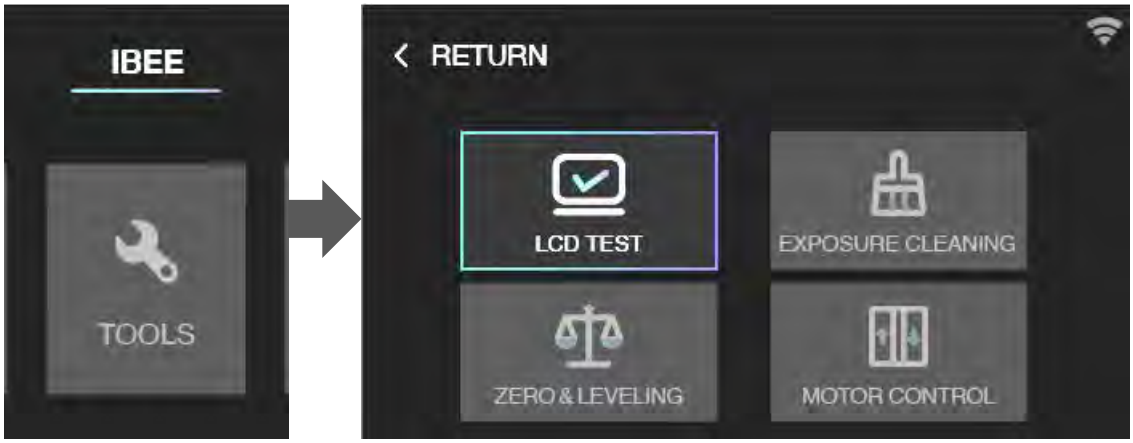

Click *LCD TEST* you will see the UNIZ Logo appears on the LCD screen.

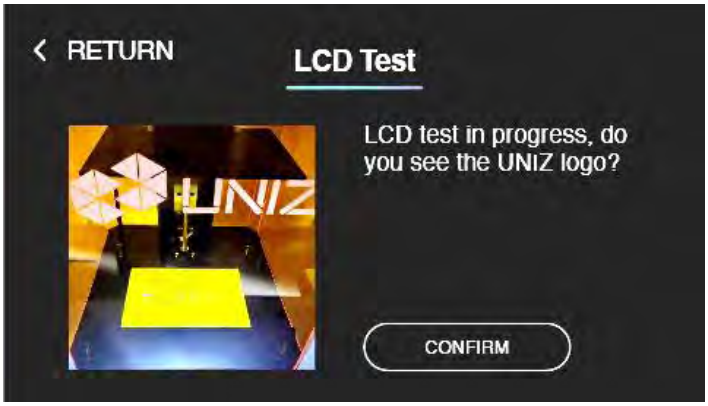

EXPOSURE TO CLEAN

When a failed print occurs and there are some residues left in the bottom of Resin Tank, you need to exposure to clean it. After that, please wear nitrile gloves and take the solidified piece out.

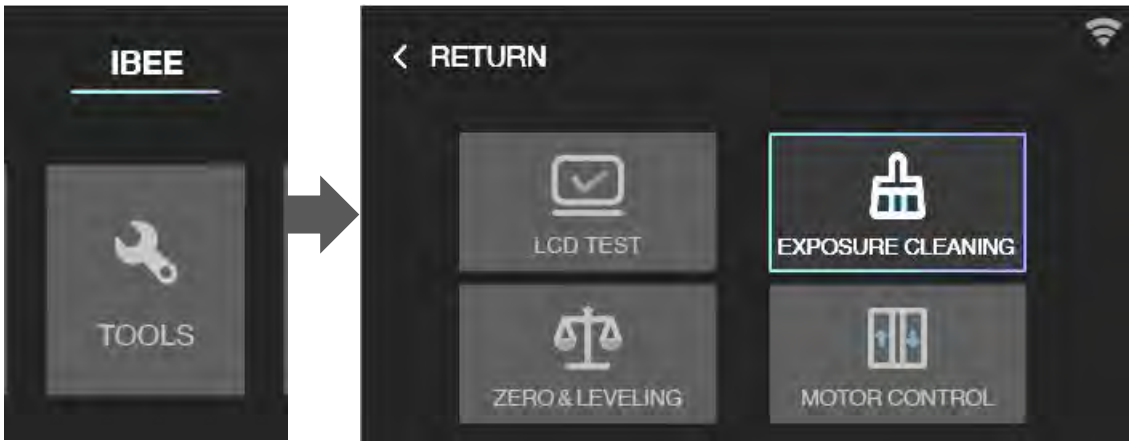

RESET Z-AXIS ZERO POSITION AND LEVELING BUILD PLATFORM

If you change for a new Build Platform or the printing model may not stick onto the Platform, please reset z-axis zero position and leveling the Build platform. You will use an A4 paper and the Hexagon Wrench in the accessory box sent with your printer.

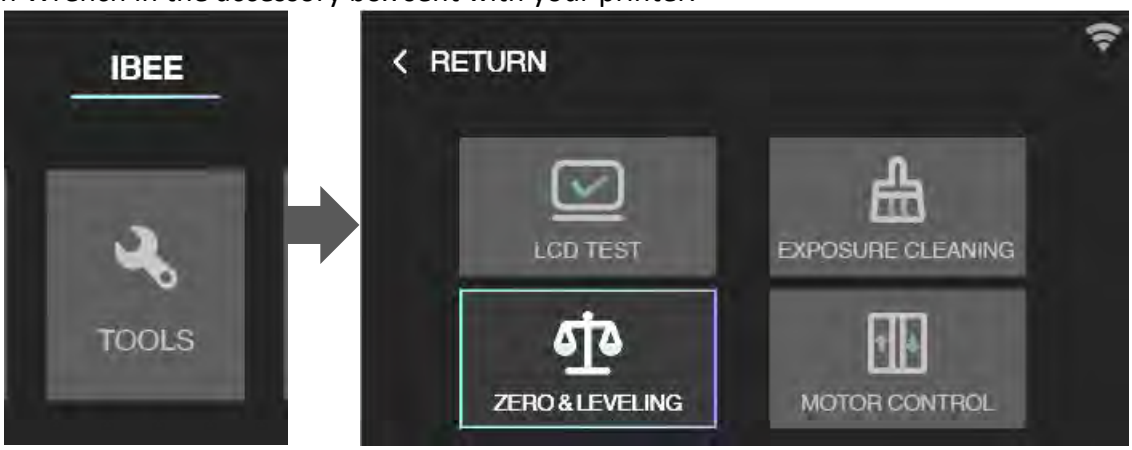

After leveling, please put the A4 paper under Build Platform and reset again. It finishes if you may feel the frictional force between Platform and A4 paper.

MOTOR CONTROL

If you want to control Build Platform to move upwards, choose a distance (10/30/50mm) first, and then click the arrow. Please do not click too fast and take an eye to watch the distance between Platform and top position. There is a scaleplate lable on the Z-axis frame for reference.

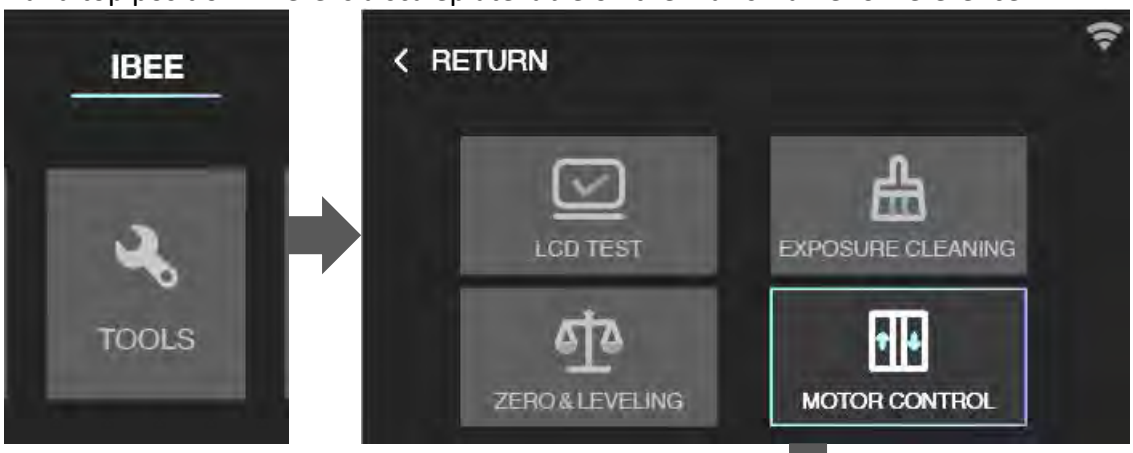

PRINT

PRINT WITH USB DISK

Choose and click the slice you want to print, then the printer will step into normal printing program.

In this interface, you may check the preview and printing parameters of the print. Also you may pause/resume or stop the printing program by click the buttons on left.

PRINT RECALL

The last file printed on the printer will be shown in the MOST RECENT interface. You may print a model second time very expediently with this function.

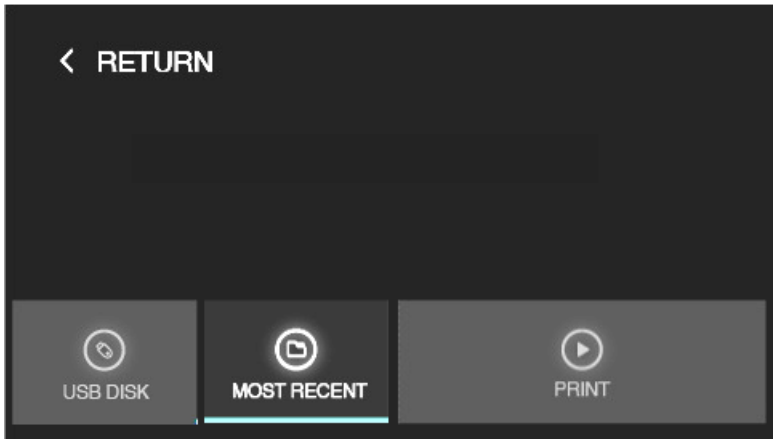

MORE DETAILS

1. There is an indicator light on the main interface and printing interface.

   Staying in green means the printer is ready for printing.

   Blinking in green means the print is in progress.

   Blinking in red means the print program is stopping and the platform is moving upwards.

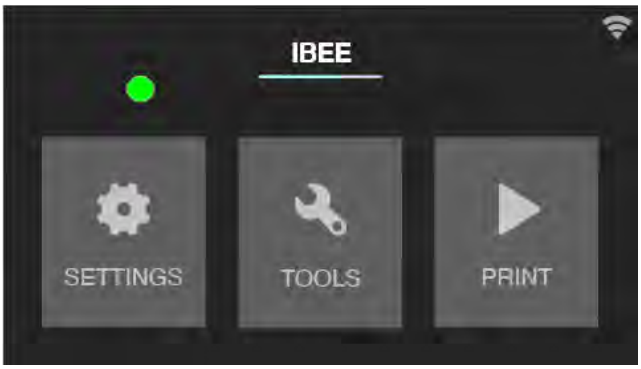

2. While the printer is connected with internet through Wi-Fi, the icon on the right-up side will turn to highlighted state.

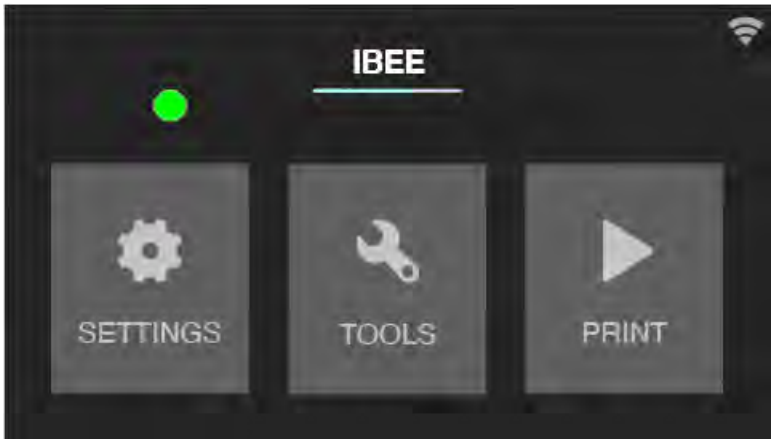

3. Please use your fingernail or any other hard thing to click the touch screen, especially in the keyboard interface.

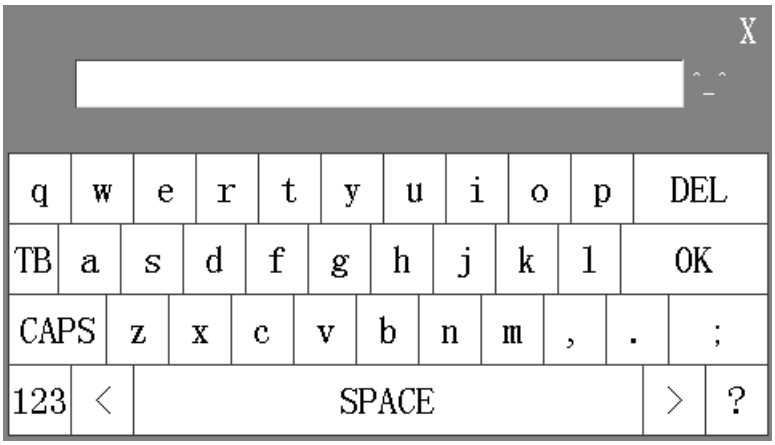

D USAGE AND MAINTENANCE

In order to have a smoothly working IBEE printer, it is important to maintain it correctly. In this chapter the most important tips are described. It is recommended to read them carefully in order to achieve the best results with your printer.

PRINTER PLACEMENT AND LEVELING

1. Put the printer on a stable desktop to keep the printer steady during printing to effectively guarantee the model quality.

2. The level of the printer is maintained by four leveling screws underneath. Adjust the four screws to restore the levelness of the printer if necessary.

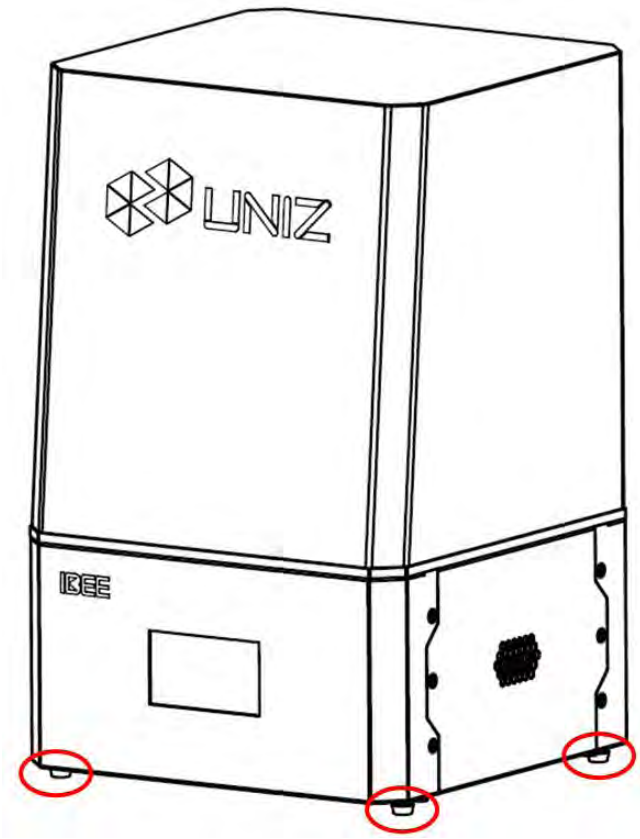

BUILD PLATFORM

The Build Platform is the platform where the first layer of the model burns-in to, its levelness and roughness are crucial to successful prints.

INSTALLATION AND REMOVAL OF BUILD PLATFORM

1. Turn the platform locking screw clockwise to lock (Turn the platform locking screw counter-clockwise to unlock).

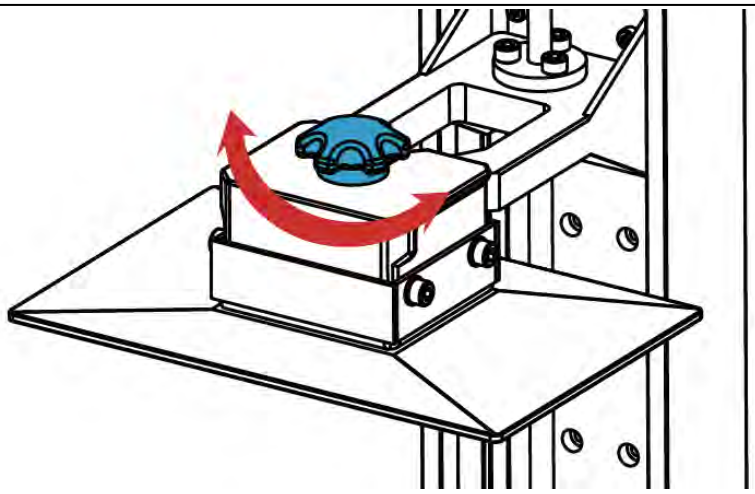

2. Install or remove the platform.

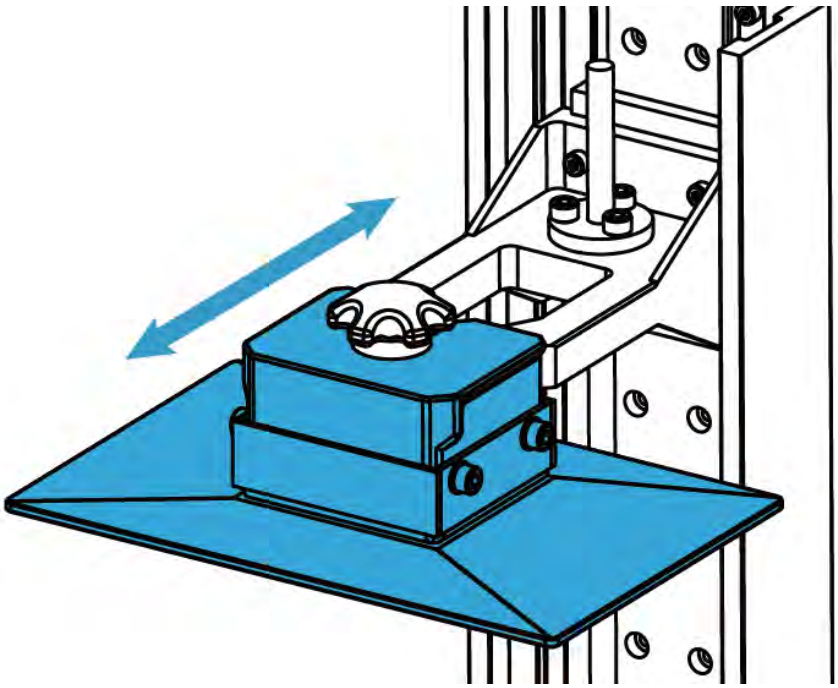

SANDING BUILD PLATFORM

After the platform has been used for a long time, its surface will become smooth which leads to poor model adhesion and increases the printing failure rate. To deal with this problem, users need to sand the platform.

1. Clean the platform surface with alcohol.
2. Grind the surface into a grid shape with the sand sandpaper delivered with the machine.

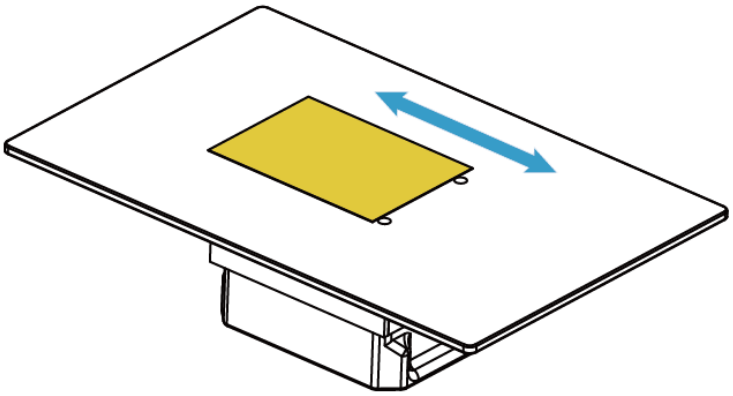

3. Clean the platform with alcohol again to make sure there is no residue left.

RESET Z-axis ZERO POSITION AND LEVELING BUILD PLATFORM

1. Prepare one A4 paper and the Hexagon Wrench in the accessory box sent with printer.
2. Make sure the bottom of Platform is clean and dry.

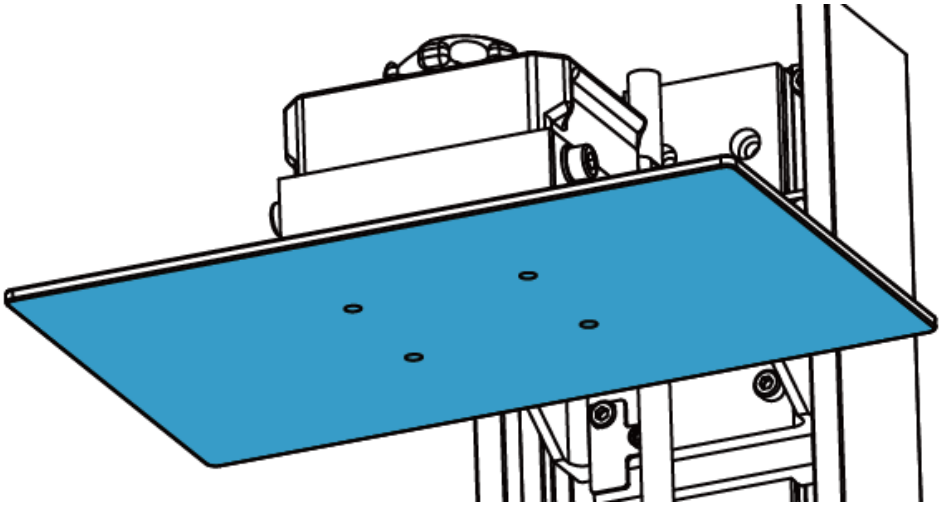

3. Turn the four lock blocks and take Resin Tank off.

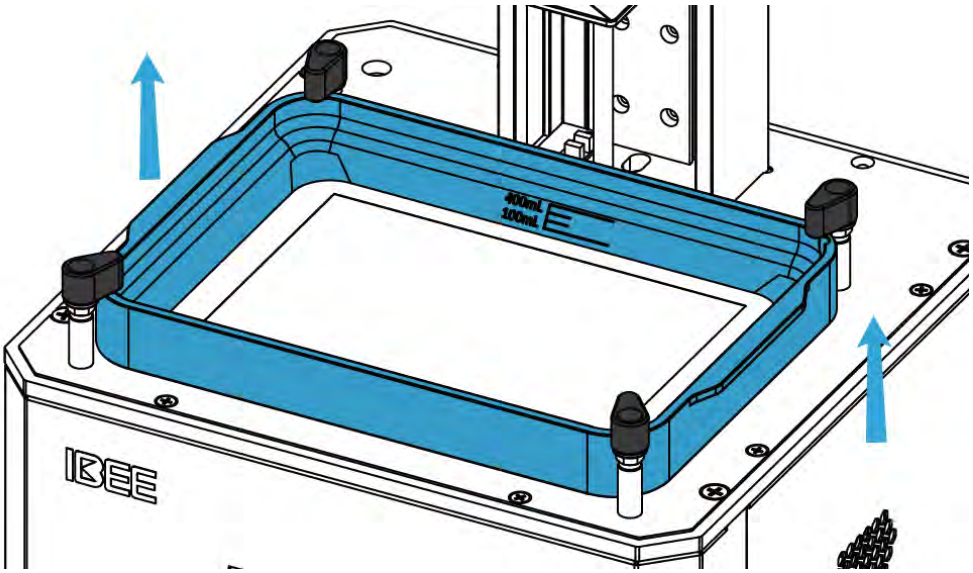

4. Loosen the four screws with Hexagon Wrench by turning counter-clockwise.

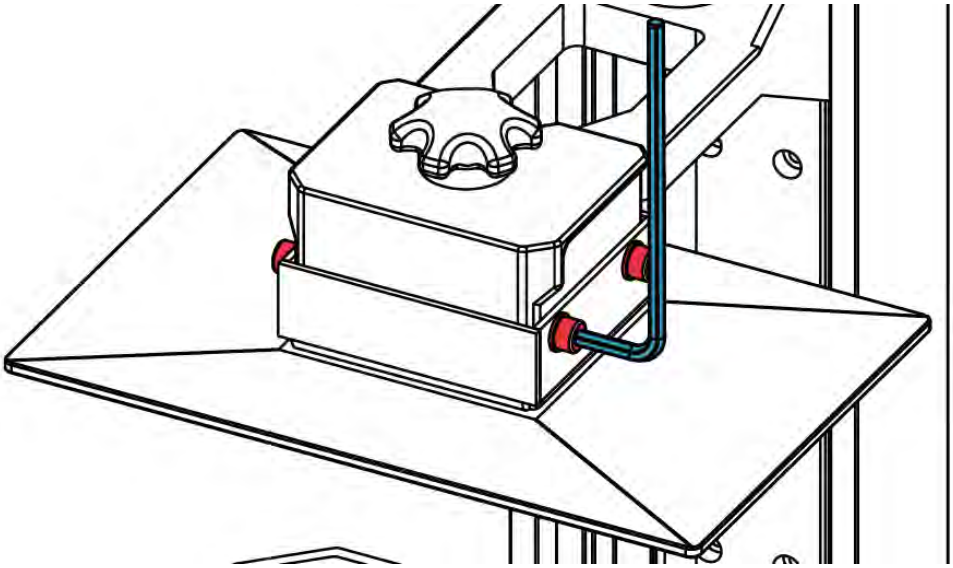

5. Click *TOOLS/ZERO&LEVELING*, then read the introduction and click *CONFIRM* twice to start.

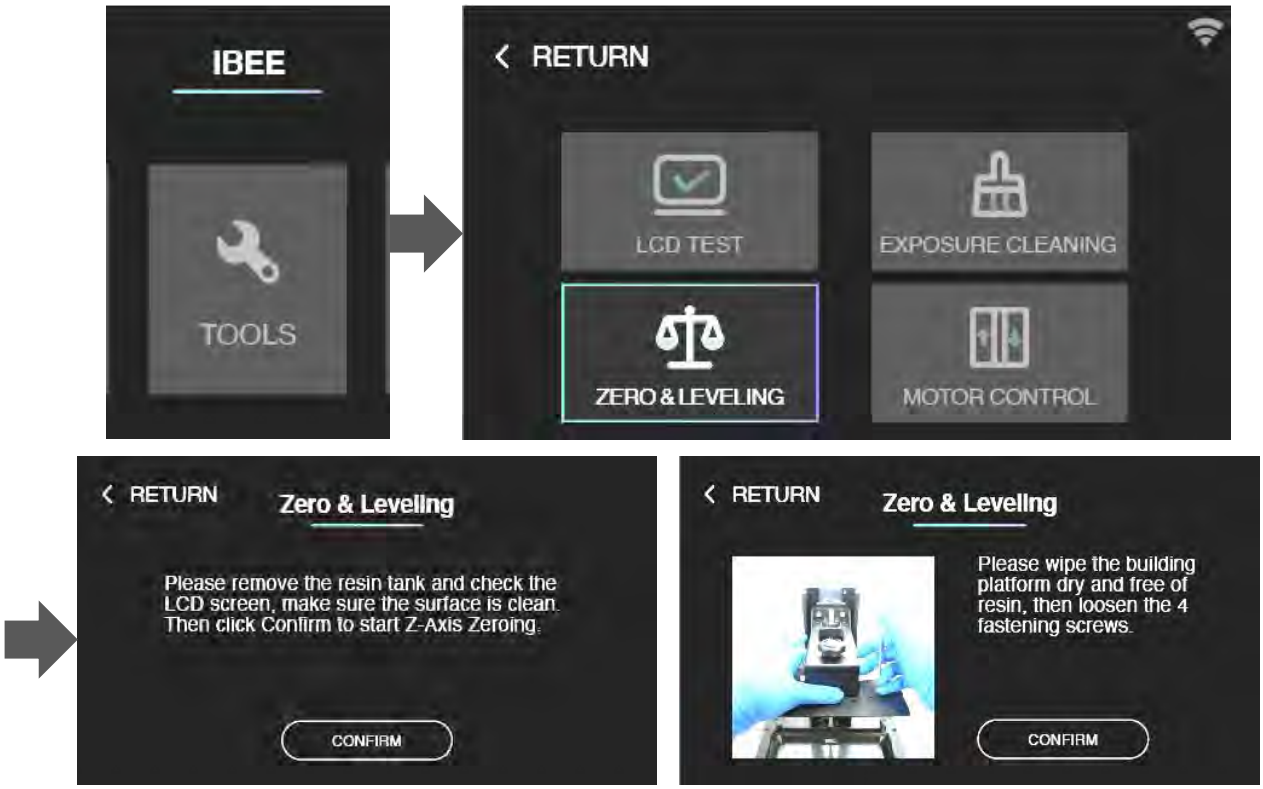

6. After Build Platform moves to the lowest position and stops, press the plate and tighten the four screws with Hexagon Wrench by turning clockwise-as the picture shows.

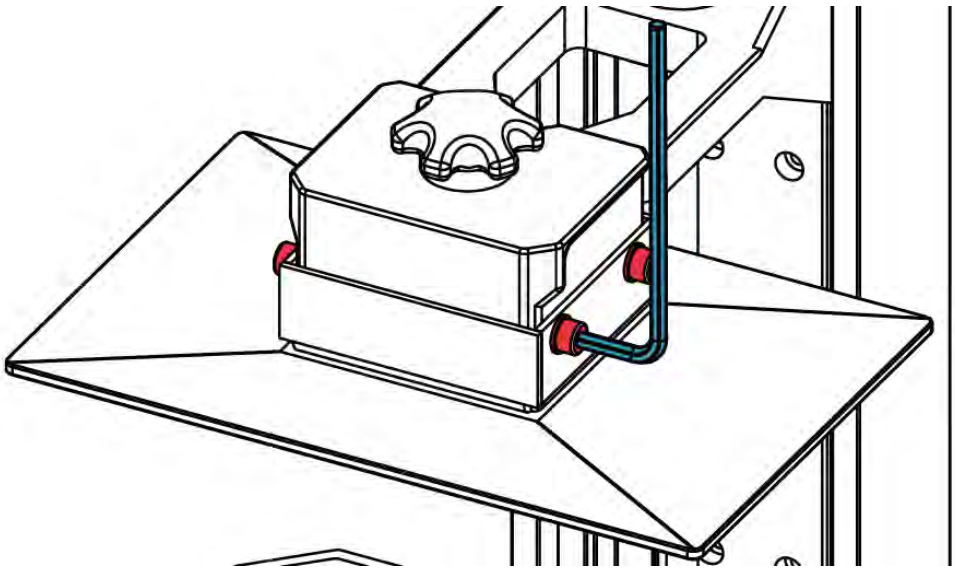

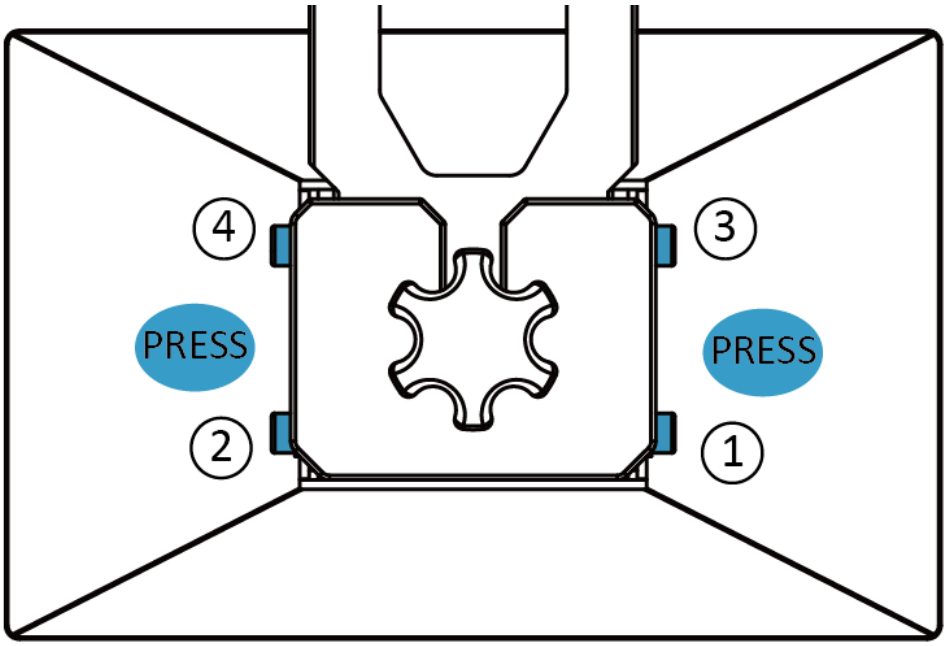

7. Click *CONFIRM* to finish.

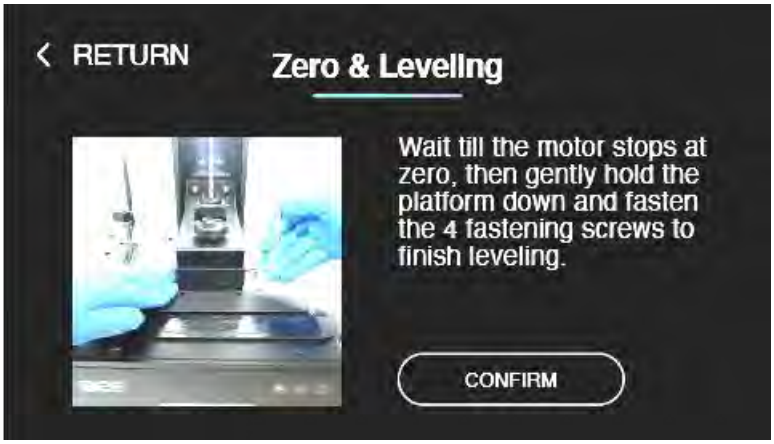

8. Click *TOOLS/MOTOR CONTROL*, and then choose the 10mm option and click the arrow. Build Platform will move upwards.

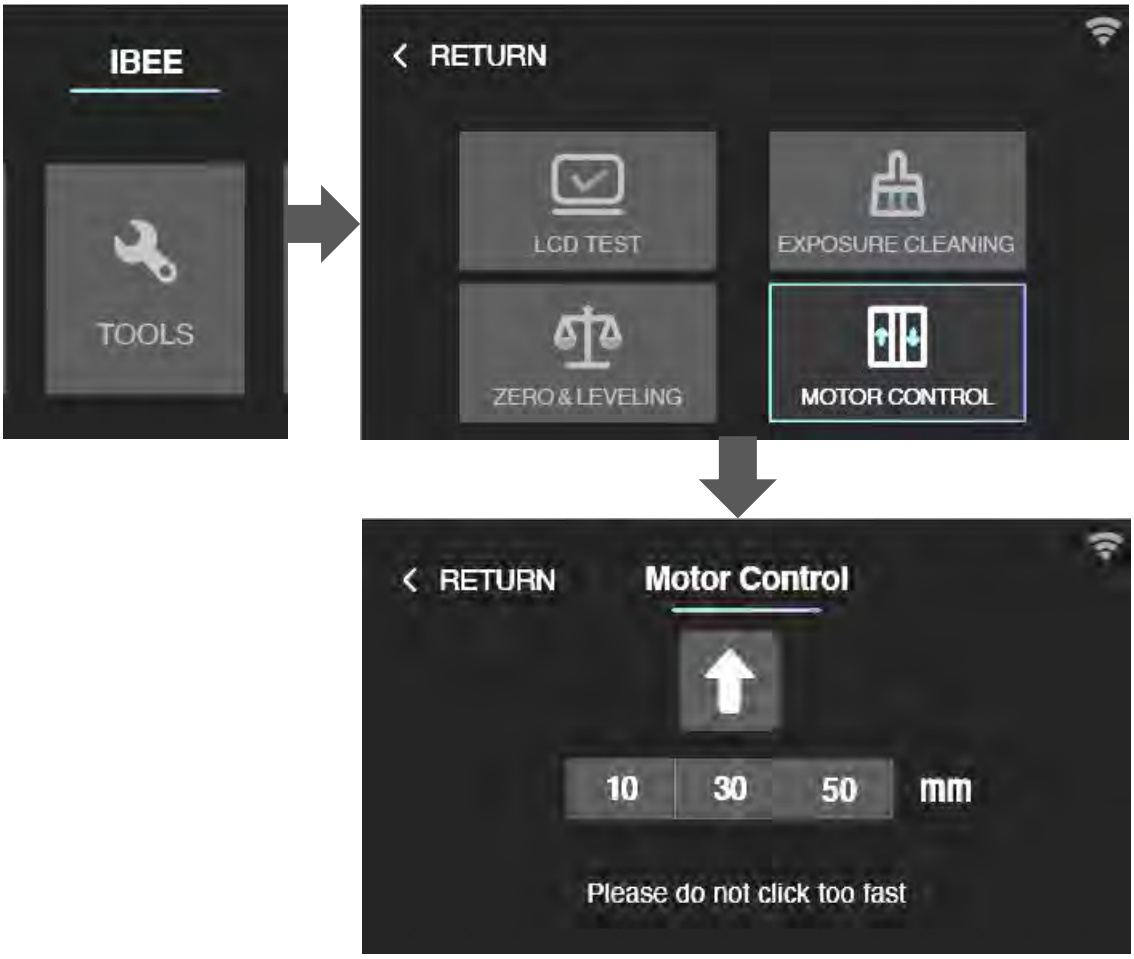

9. Wait until the Platform stops, put a piece of A4 paper under the Platform and repeat step 5.

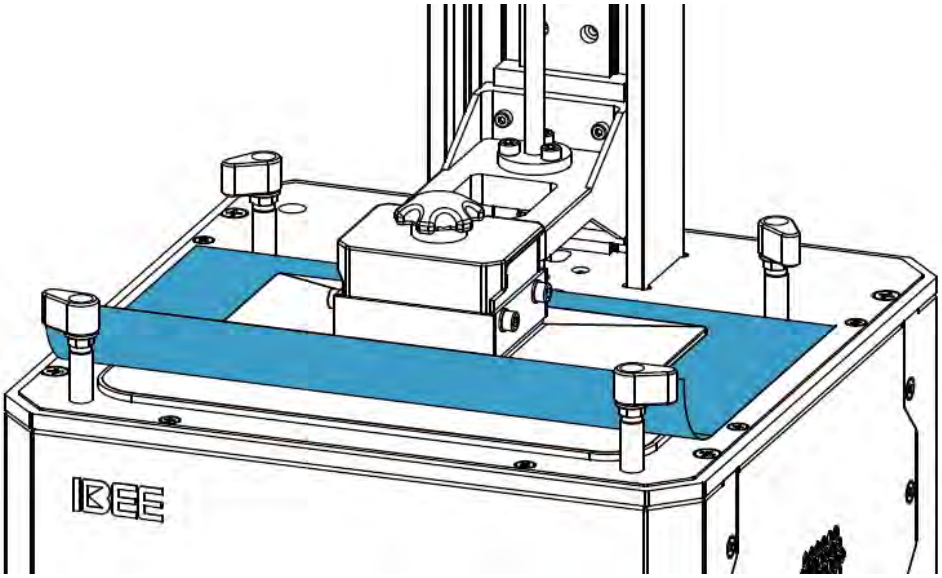

10. Try to pull out A4 paper from any directions. If you can feel the frictional force between Platform and A4 paper, that means it is zeroed and leveled successfully.

CLEAN BUILD PLATFORM

When printing fails, there may be residues on the platform which needs to be cleaned in time to avoid damage to the screen.

Please use the Shovel delivered with the printer to remove the residues (please dispose of solidified materials and waste resin properly).

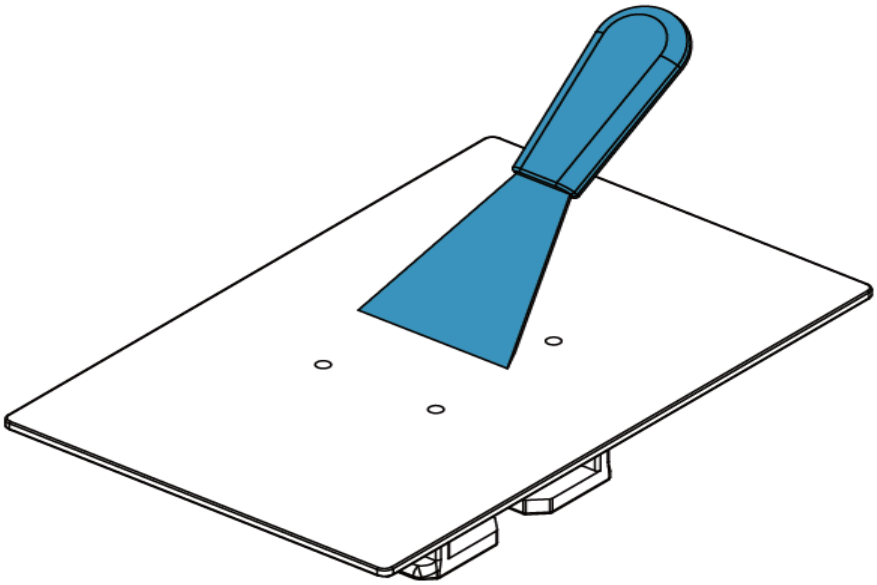

Notes: 1. After removal of model, please clean Build Platform thoroughly, any leftover bits may damage the Resin Tank or LCD.

2. Please be careful and **do not hurt yourself**.

RESIN TANK

The Resin Tank is a crucial part for a successful print job, and requires constant maintenance and regular replacement.

INSTALLATION

1. Make sure the LCD is clean and dry.

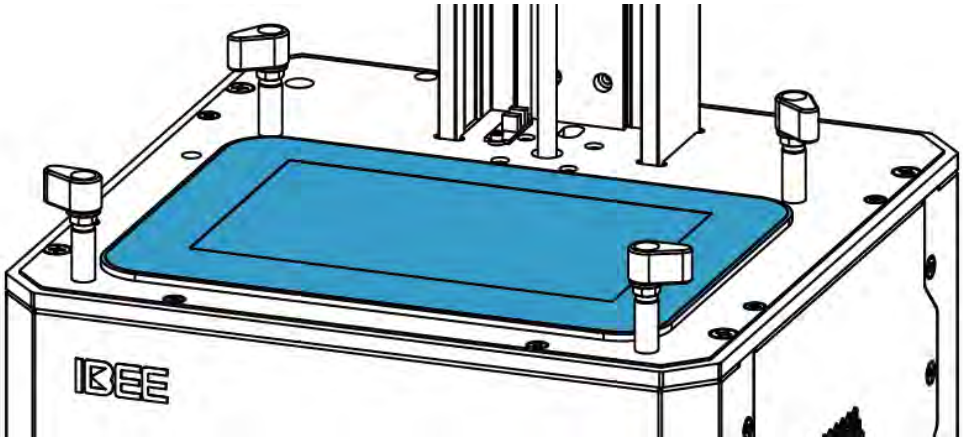

2. Put Resin Tank onto the LCD screen.

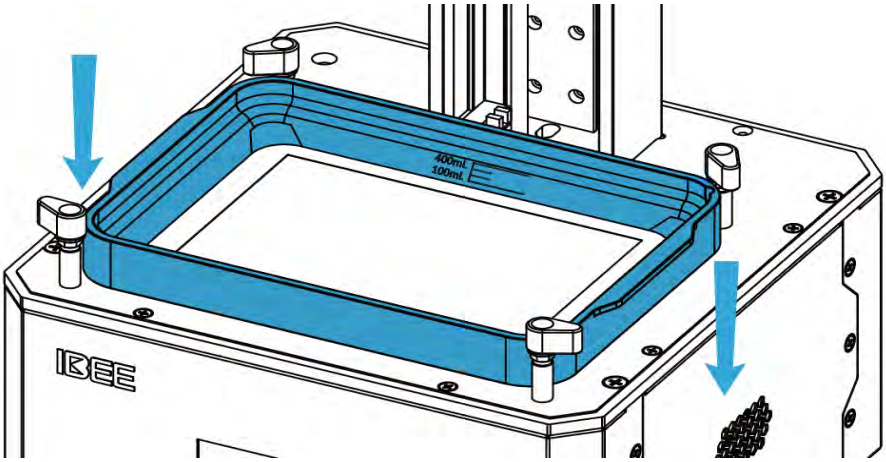

3. Turn the four lock blocks to lock the Resin Tank.

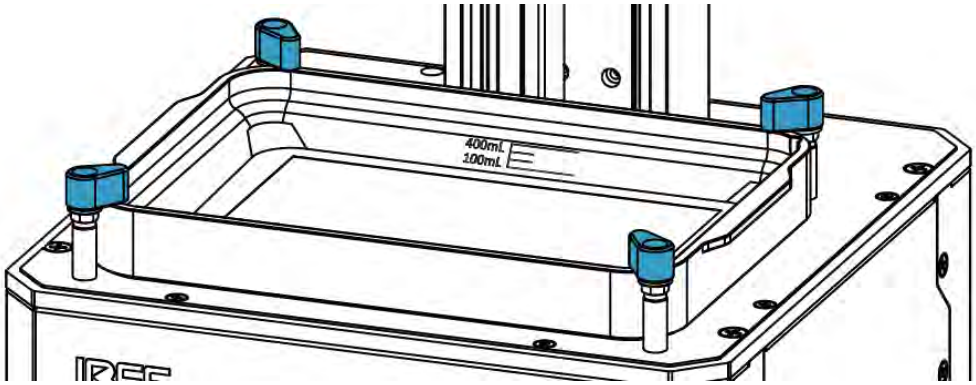

4. Make sure the Resin Tank is stably locked and repeat the above steps if it shakes.

CLEAN RESIN TANK

When printing fails, there may be residues in the Resin Tank which needs to be cleaned in time to avoid damage to the screen.

When residues are small in number and big in volume, use the cards delivered with the machine to clean; when residues are big in number and small in volume, it is recommended to use the Full Screen Clean function as following.

1. Click *TOOLS/EXPOSURE CLEANING*, repeat if necessary.

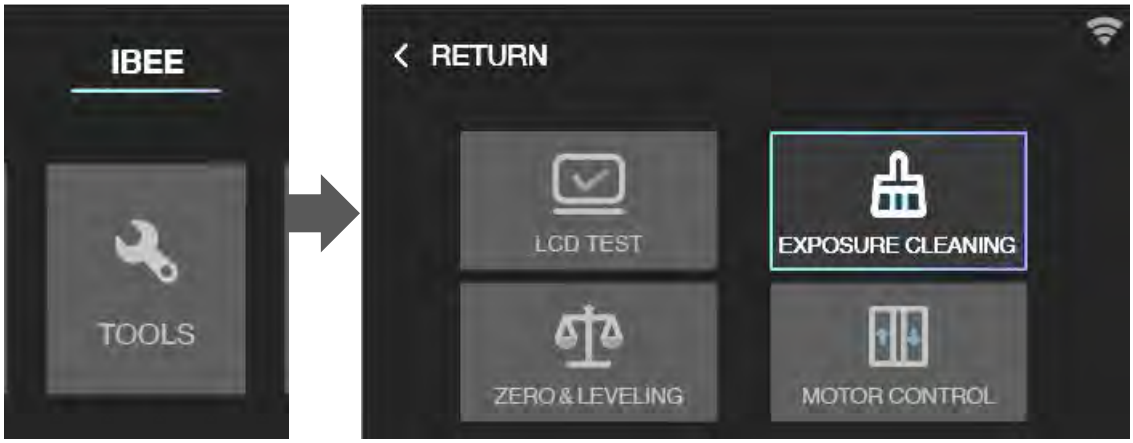

2. After the exposure is done, gently scrape off the whole piece of cured resin from Tank with a paper card. **DO NOT** use the scrapper, since this may damage the film and cause a severe leak.

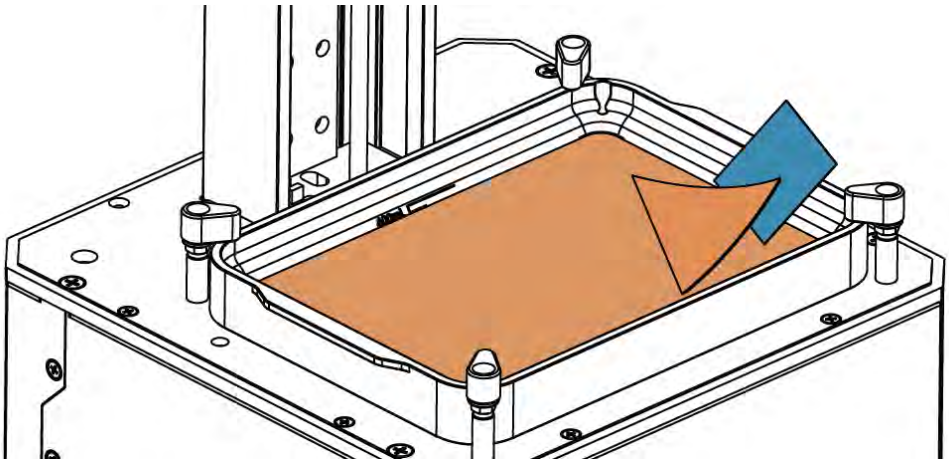

Change the Resin Tank Film

1. Make sure the Resin Tank is wiped clean inside and out, and put it on a clean table.

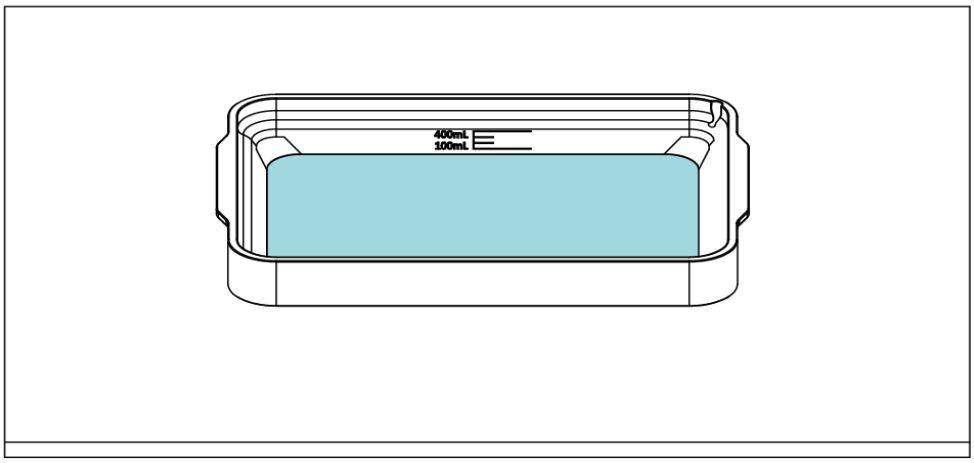

2. Flip the Resin Tank and remove the outer 16 down-side screws with a screwdriver.

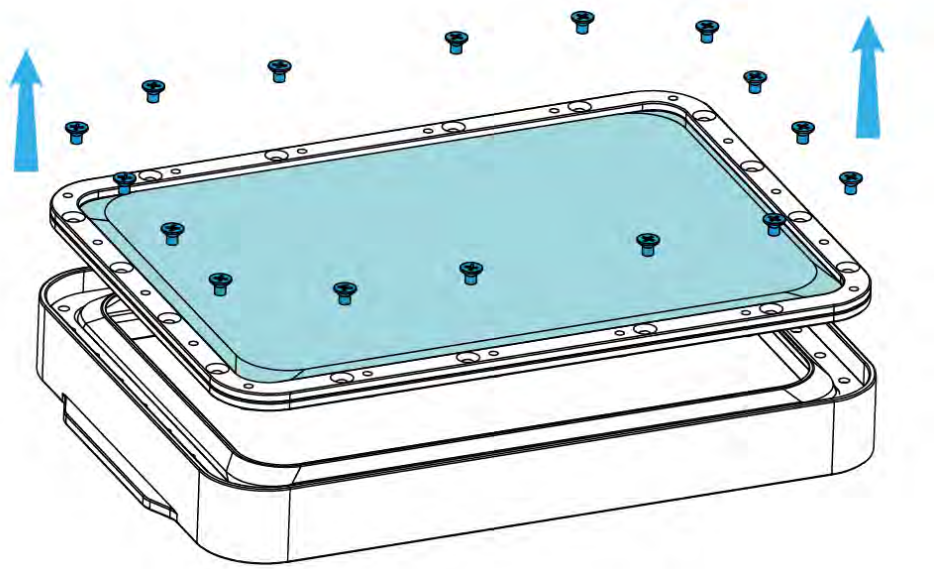

3. Take out the Film Frame, and put it on the table then remove the remaining 18 up-side screws.

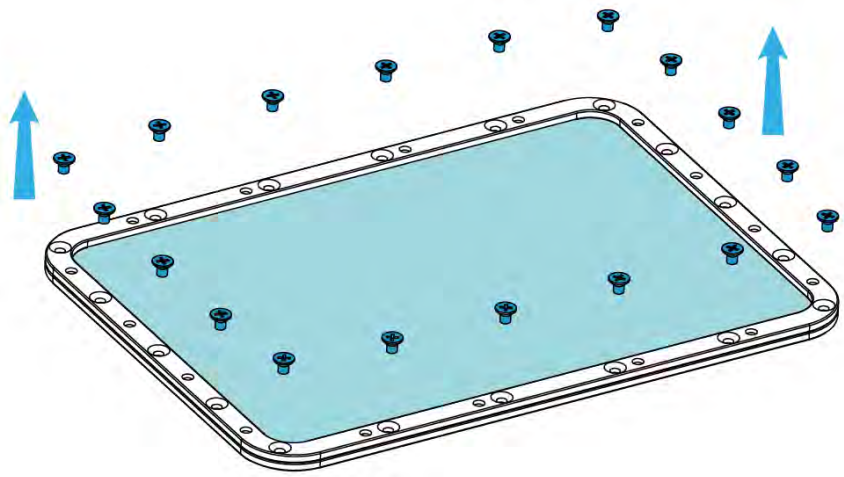

4. Wipe clean the Resin Tank and Film Frame. Be careful don't damage the film sealer.

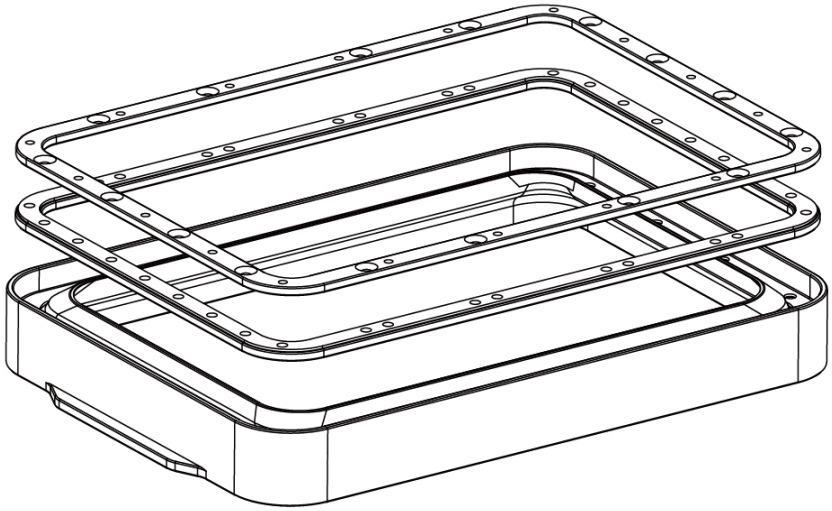

5. Lay the Frame flat, sandwich a new film between the Frames, then press the film with the **Acrylic Plate** and Build Platform. **Keep the concave surface of film upwards.**

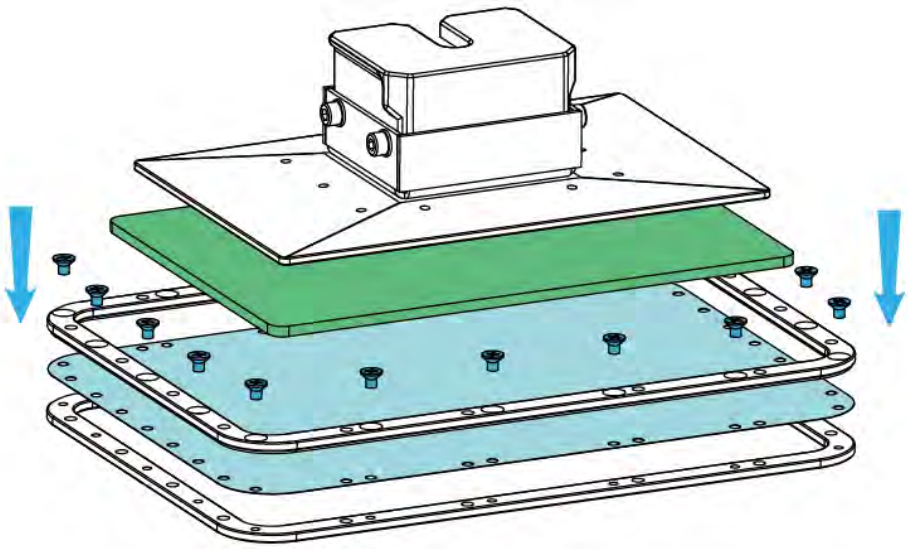

6. Tighten the 18 up-side screws while holding the Film Frame down.

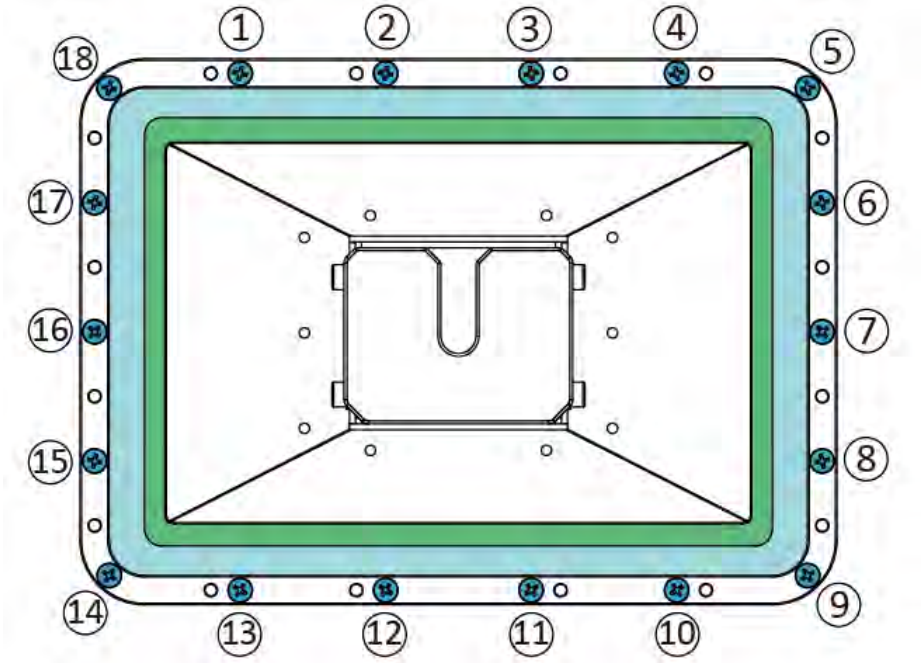

7. Put the Frame back into Resin Tank's slot, then **slowly** tighten 16 down-side screws.

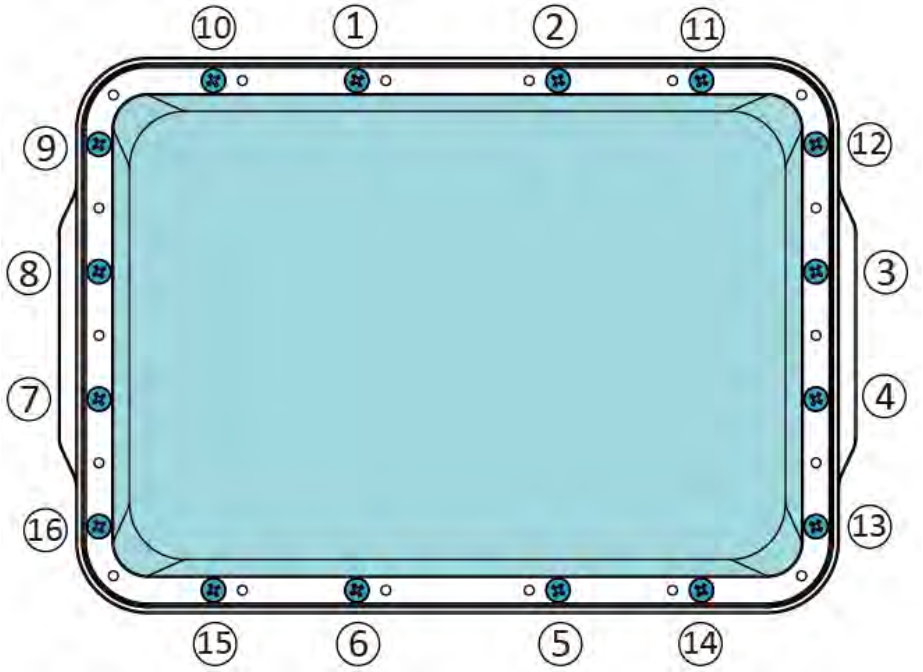

8. Changing the Resin Tank film is finished.

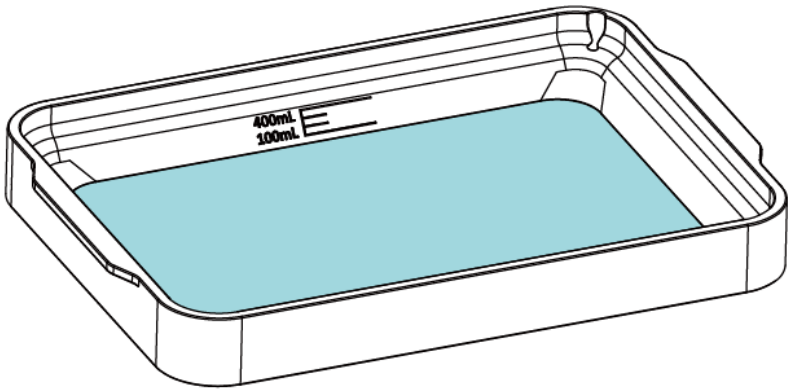

CHANGE LCD PROTECTIVE FILM

There is a protective film on the LCD of IBEE. If the film is scratched or dirty with cured resin, you should change for a new one.

1. Peel off the old film.

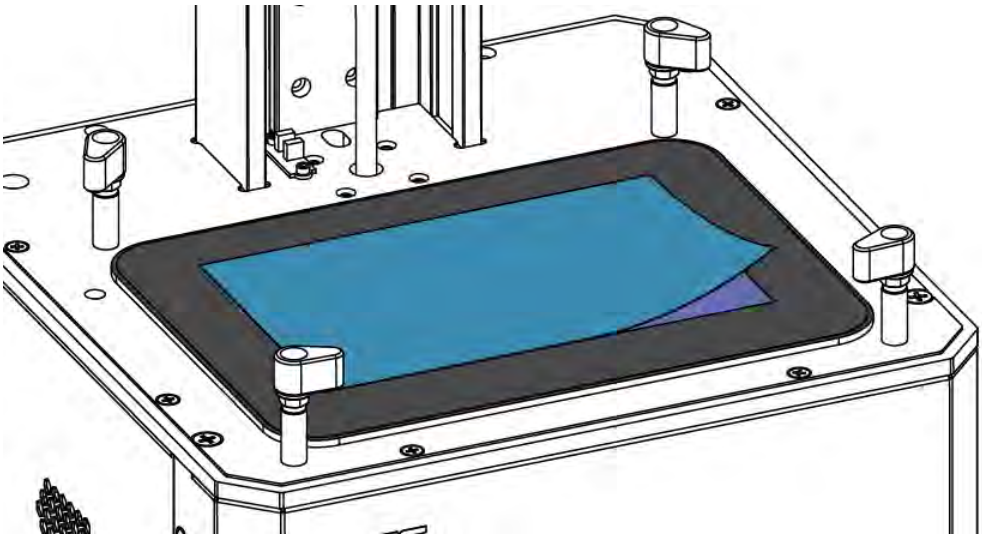

2. Clean the surface of LCD and make sure there is no dust and residue left.

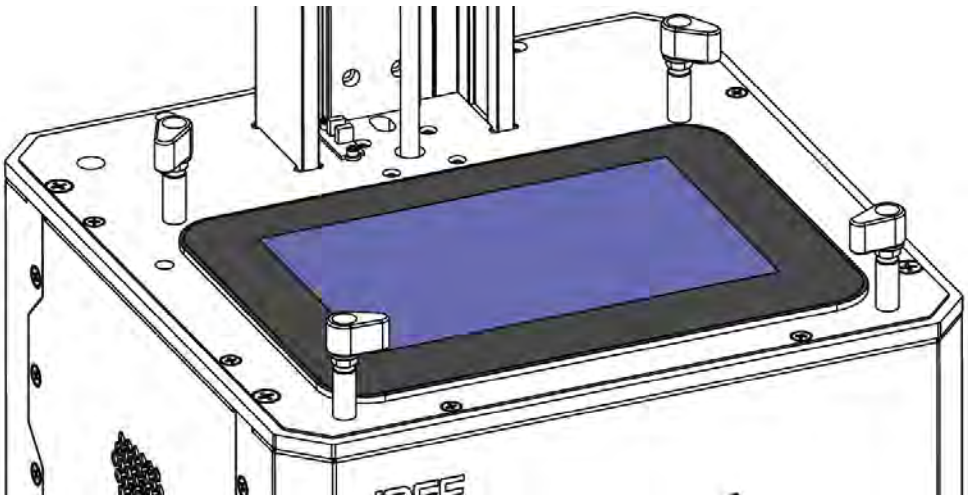

4. Take out a new film and peel off the cover film marked '①'.

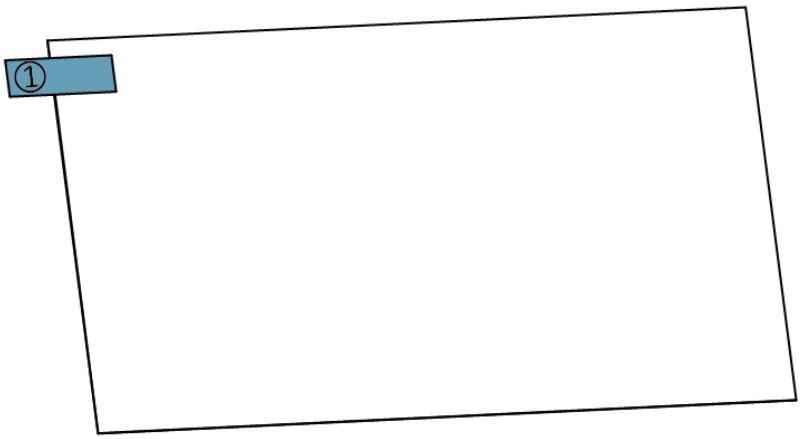

5. Using a card and cloth to paste the film onto the surface of LCD.

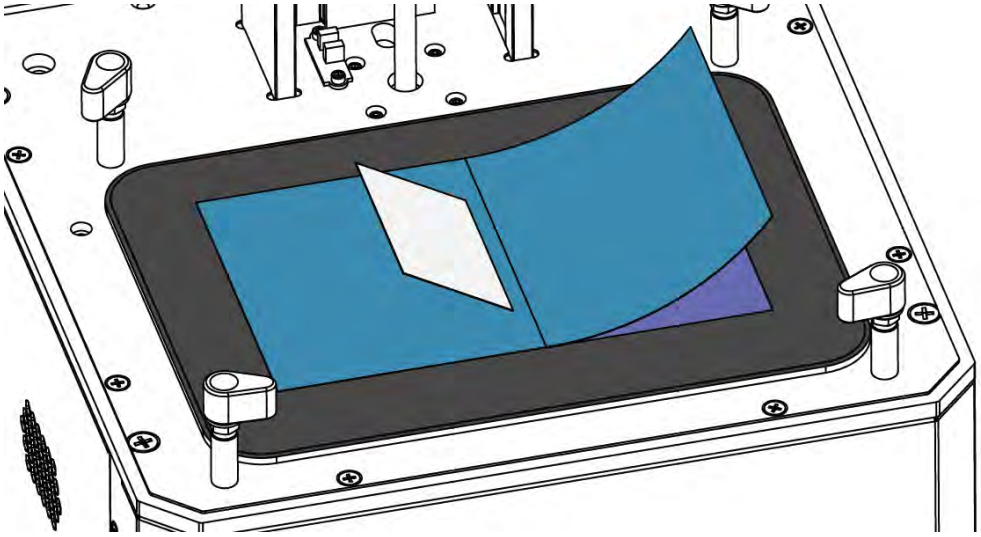

6. Peel off the cover film marked '②'.

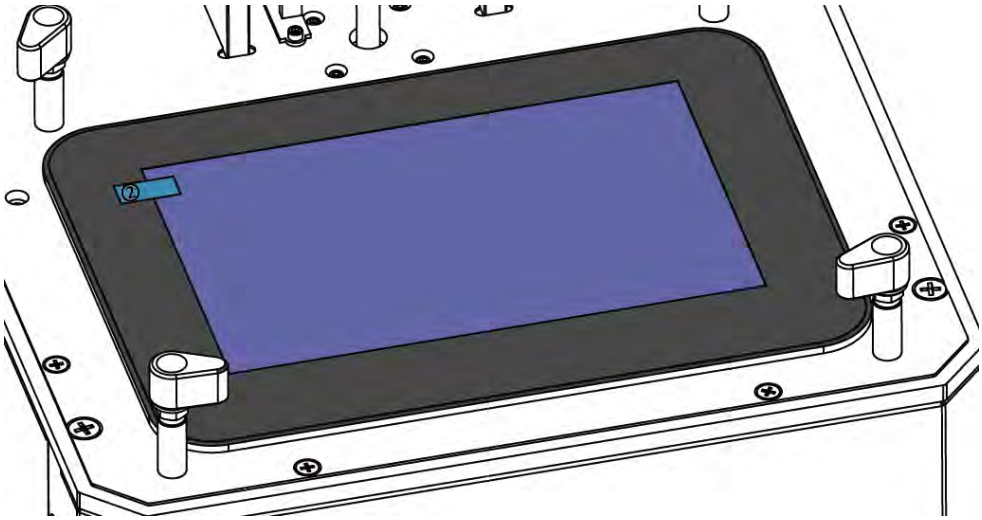

7. All done. The air bubble between film and LCD will disappear automatically in a period of time.

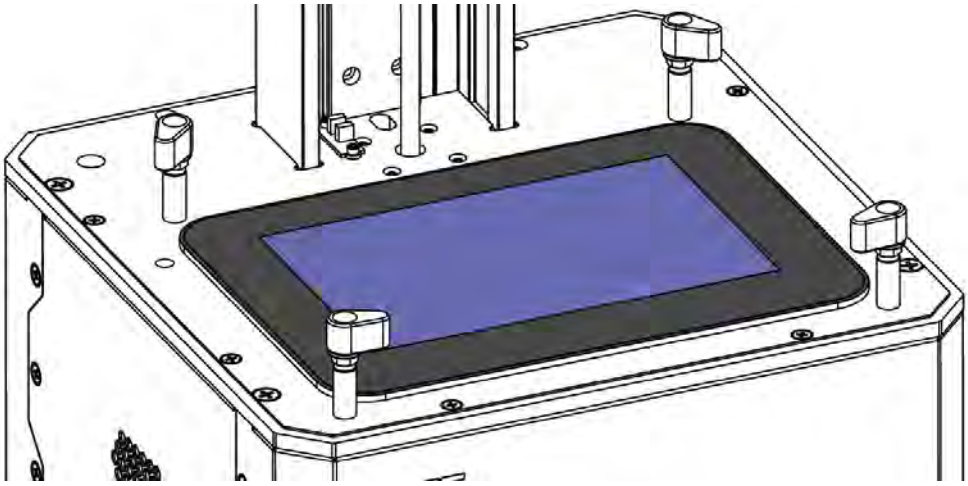

CLEAN AIR FILTER

1. Pry and take off the cover of air filter at the behind of printer.

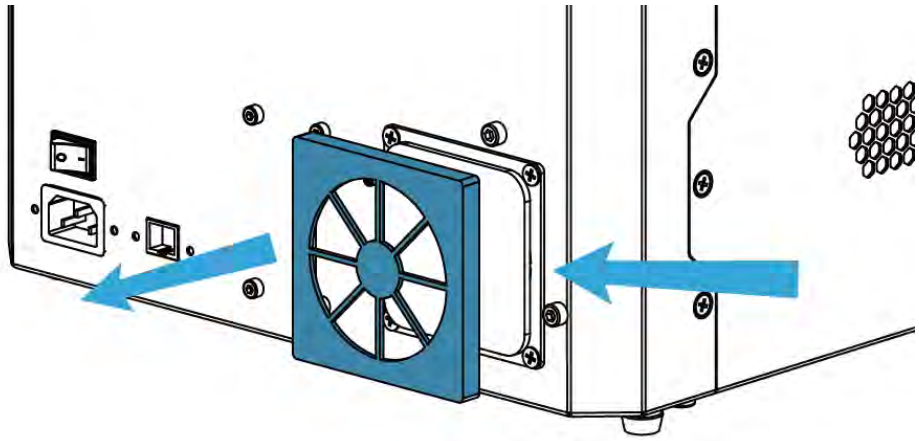

2. Take off the filter and use water or alcohol to clean it.

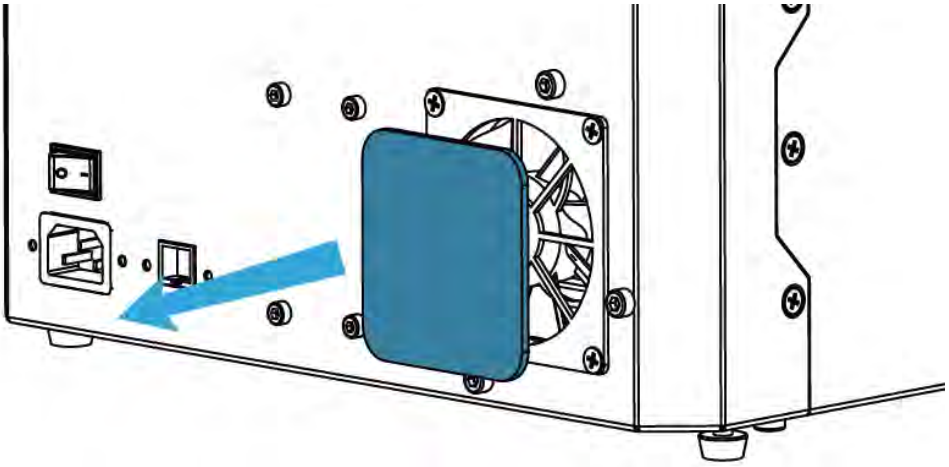

3. Push the filter and cover back.

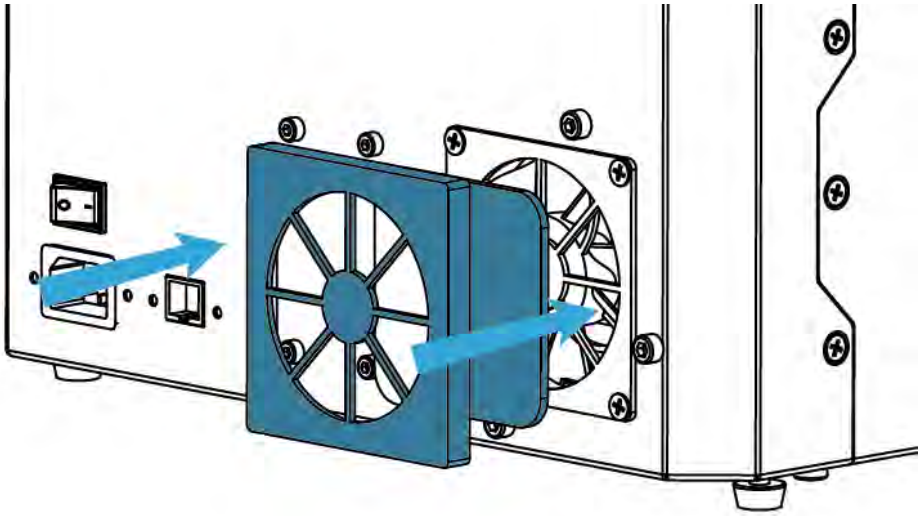

E CONTACT US

FOR MORE INFORMATION

uniz.com/support

Our website has extensive documentation and troubleshooting information to solve issues quickly on you own.

support@uniz.com

If you ever need help resolving an issue, please send an email to the address above to contact our Support Team.

STORE

uniz.com/store

To learn about other UNIZ products, including UNIZ resins, please visit our online store.

sales@uniz.com

If you have additional questions about any UNIZ product, please email our Sales Team at the address above.

FEEDBACK

thoughts@uniz.com

We love to hear from you. Please give us feedback.

FCC Warning:
This transmitter must not be co-located or operating in conjunction with any other antenna or transmitter.
Any Changes or modifications not expressly approved by the party responsible for compliance could void the user's authority to operate the equipment.

This device complies with part 15 of the FCC Rules. Operation is subject to the following two conditions: (1) This device may not cause harmful interference, and (2) this device must accept any interference received, including interference that may cause undesired operation.

Note: This equipment has been tested and found to comply with the limits for a Class B digital device, pursuant to part 15 of the FCC Rules. These limits are designed to provide reasonable protection against harmful interference in a residential installation. This equipment generates, uses and can radiate radio frequency energy and, if not installed and used in accordance with the instructions, may cause harmful interference to radio communications. However, there is no guarantee that interference will not occur in a particular installation. If this equipment does cause harmful interference to radio or television reception, which can be determined by turning the equipment off and on, the user is encouraged to try to correct the interference by one or more of the following measures:
—Reorient or relocate the receiving antenna.
—Increase the separation between the equipment and receiver.
—Connect the equipment into an outlet on a circuit different from that to which the receiver is connected.
—Consult the dealer or an experienced radio/TV technician for help.

RF Exposure Statement:
This equipment complies with FCC radiation exposure limits set forth for an uncontrolled environment.
This equipment should be installed and operated with minimum distance 20cm between the radiator & your body.

CE FC RoHS

UNIZ Technology LLC
9400 Activity Rd Ste L, San Diego, California, 92126, United States

E CONTACT US

UNIZ