FCC Part 15C Test Report

FCC ID: 2AZMHMD31028

Product Name:	Transmitter
Trademark:	N/A
Model Name :	MD31028
Prepared For : Address :	NOVO (GUANGDONG) HIGH-TECH CO., LTD. No.7-1, Jiye Road, Leping Town, Sanshui District, Foshan City, China
Prepared By : Address :	Shenzhen BCTC Testing Co., Ltd. BCTC Building & 1-2F, East of B Building, Pengzhou Industrial, Fuyuan 1st Road, Qiaotou Community, Fuyong Street, Bao'an District, Shenzhen, China
Test Date:	Jul. 23, 2020 to Aug. 25, 2020
Date of Report :	Aug. 26, 2020
Report No.:	BCTC2007001211E

VERIFICATION OF COMPLIANCE

Applicant's name ..... NOVO (GUANGDONG) HIGH-TECH CO., LTD.

Address ..... No.7-1, Jiye Road, Leping Town, Sanshui District, Foshan City, China

Manufacture's Name ... NOVO (GUANGDONG) HIGH-TECH CO., LTD.

Address ..... No.7-1, Jiye Road, Leping Town, Sanshui District, Foshan City, China

Product description

Product name..... Transmitter

Trademark: N/A

Model Name: MD31028

Test Standards: FCC Part15.231
ANSI C63.10-2013

This device described above has been tested by BCTC, and the test results show that the equipment under test (EUT) is in compliance with the FCC requirements. And it is applicable only to the tested sample identified in the report.

This report shall not be reproduced except in full, without the written approval of BCTC, this document may be altered or revised by BCTC, personal only, and shall be noted in the revision of the document.

Test Result..... **Pass**

Prepared by(Engineer): Cai Fang Zhong Cai Fang Zhong

Reviewer(Supervisor): Eric Yang Eric Yang

Approved(Manager): Zero Zhou Zero Zhou

BCTC APPROVED SHENZHEN BCTC TESTING CO., LTD.

Table of Contents **Page**

1 . SUMMARY OF TEST RESULTS 5
1.1 TEST FACILITY 6
1.2 MEASUREMENT UNCERTAINTY 6
2 . GENERAL INFORMATION 7
2.1 GENERAL DESCRIPTION OF EUT 7
2.2 DESCRIPTION OF TEST MODES 8
2.3 BLOCK DIGRAM SHOWING THE CONFIGURATION OF SYSTEM TESTED 8
2.4 DESCRIPTION OF SUPPORT UNITS(CONDUCTED MODE) 8
2.5 EQUIPMENTS LIST FOR ALL TEST ITEMS 9
3 . EMC EMISSION TEST 11
3.1 CONDUCTED EMISSION MEASUREMENT 11
3.1.1 POWER LINE CONDUCTED EMISSION LIMITS 11
3.1.2 TEST PROCEDURE 12
3.1.3 DEVIATION FROM TEST STANDARD 12
3.1.4 TEST SETUP 12
3.1.5 EUT OPERATING CONDITIONS 12
3.1.6 TEST RESULTS 12
3.2 RADIATED EMISSION MEASUREMENT 13
3.2.1 RADIATED EMISSION LIMITS 13
3.2.2 TEST PROCEDURE 14
3.2.3 TEST SETUP 15
3.2.4 EUT OPERATING CONDITIONS 16
3.2.5 TEST RESULTS 17
4 . BANDWIDTH TEST 22
4.1 APPLIED PROCEDURES / LIMIT 22
4.1.1 TEST PROCEDURE 22
4.1.2 DEVIATION FROM STANDARD 22
4.1.3 TEST SETUP 22
4.1.4 EUT OPERATION CONDITIONS 22
4.1.5 TEST RESULTS 23
5 . CALCULATION OF AVERAGE FACTOR 24
6 . DWELL TIME 26
6.1 DEVIATION FROM STANDARD 26
6.2 TEST SETUP 26
6.3 EUT OPERATION CONDITIONS 26

Table of Contents **Page**

6.4 TEST RESULTS 27
7 . ANTENNA REQUIREMENT 28
7.1 STANDARD REQUIREMENT 28
7.2 EUT ANTENNA 28
8 . EUT TEST PHOTO 29
9 . EUT PHOTO 30
APPENDIX-PHOTOGRAPHS OF EUT CONSTRUCTIONAL DETAILS

1. SUMMARY OF TEST RESULTS

Test procedures according to the technical standards:

FCC Part15 (15.231) , Subpart C			
Standard Section	Test Item	Judgment	Remark
15.207	Conducted Emission	N/A	
15.209,15.231b	Fundamental &Radiated Spurious Emission Measurement	PASS	
15.231c	Occupy Bandwidth	PASS	
15.231a	Dwell time	PASS	
15.203	Antenna Requirement	PASS	

NOTE:

(1)" N/A" denotes test is not applicable in this Test Report

1.1 TEST FACILITY

Shenzhen BCTC Testing Co., Ltd.
Add.: BCTC Building & 1-2F, East of B Building, Pengzhou Industrial, Fuyuan 1st Road, Qiaotou Community, Fuyong Street, Bao'an District, Shenzhen, China
FCC Test Firm Registration Number: 712850
IC Registered No.: 23583

1.2 MEASUREMENT UNCERTAINTY

The reported uncertainty of measurement **y ± U** , where expended uncertainty **U** is based on a standard uncertainty multiplied by a coverage factor of **k=2** , providing a level of confidence of approximately **95** %。

No.	Item	Uncertainty
1	3m camber Radiated spurious emission(30MHz-1GHz)	U=4.3dB
2	3m chamber Radiated spurious emission(1GHz-18GHz)	U=4.5dB
3	3m chamber Radiated spurious emission(18GHz-40GHz)	U=3.34dB
4	Conducted Adjacent channel power	U=1.38dB
5	Conducted output power uncertainty Above 1G	U=1.576dB
6	Conducted output power uncertainty below 1G	U=1.28dB
7	humidity uncertainty	U=5.3%
8	Temperature uncertainty	U=0.59℃

2. GENERAL INFORMATION

2.1 GENERAL DESCRIPTION OF EUT

Equipment	Transmitter
Trade Name	N/A
Model Name	MD31028
Serial Model	N/A
Model Difference	N/A
Product Description	Operation Frequency: 433.92MHz Modulation Type: FSK Antenna Type: PCB antenna Antenna Gain: 0dBi
Ratings	DC 3V
Connecting I/O Port(s)	Please refer to the User's Manual

Note:

1. For a more detailed features description, please refer to the manufacturer's specifications or the User's Manual.

2.2 DESCRIPTION OF TEST MODES

For All Emission	
Final Test Mode	Description
Mode 1	TX Mode

Note:
(1) Fully-charged battery is used during the test

2.3 BLOCK DIGRAM SHOWING THE CONFIGURATION OF SYSTEM TESTED

Spurious emissions

E-1
EUT

2.4 DESCRIPTION OF SUPPORT UNITS(CONDUCTED MODE)

The EUT has been tested as an independent unit together with other necessary accessories or support units. The following support units or accessories were used to form a representative test configuration during the tests.

Item	Equipment	Mfr/Brand	Model/Type No.	Series No.	Note
E-1	Transmitter	N/A	MD31028	N/A	EUT

Note:

(1) The support equipment was authorized by Declaration of Confirmation.
(2) For detachable type I/O cable should be specified the length in cm in 『Length』 column.
(3) “YES” is means “shielded” “with core”; “NO” is means “unshielded” “without core”.

2.5 EQUIPMENTS LIST FOR ALL TEST ITEMS

Radiation Test equipment

Item	Equipment	Manufacturer	Type No.	Serial No.	Last calibration	Calibrated until
1	Spectrum Analyzer (9kHz-26.5GHz)	Agilent	E4407B	MY45109572	Jun. 08, 2020	Jun. 07, 2021
2	Test Receiver (9kHz-7GHz)	R&S	ESR7	101154	Jun. 08, 2020	Jun. 07, 2021
3	Bilog Antenna (30MHz-3GHz)	SCHWARZBECK	VULB9163	VULB9163-942	Jun. 08, 2020	Jun. 07, 2021
4	Horn Antenna (1GHz-18GHz)	SCHWARZBECK	BBHA9120D	1541	Jun. 10, 2020	Jun. 09, 2021
5	Horn Antenna (18GHz-40GHz)	SCHWARZBECK	BBHA9170	00822	Jun. 10, 2020	Jun. 09, 2021
6	Amplifier (9KHz-6GHz)	SCHWARZBECK	BBV9744	9744-0037	Jun. 04, 2020	Jun. 03, 2021
7	Amplifier (0.5GHz-18GHz)	SCHWARZBECK	BBV9718	9718-309	Jun. 04, 2020	Jun. 03, 2021
8	Amplifier (18GHz-40GHz)	MITEQ	TTA1840-35-HG	2034381	Jun. 08, 2020	Jun. 07, 2021
9	Loop Antenna (9KHz-30MHz)	SCHWARZBECK	FMZB1519B	00014	Jun. 08, 2020	Jun. 07, 2021
10	RF cables1 (9kHz-30MHz)	Huber+Suhnar	9kHz-30MHz	B1702988-0008	Jun. 08, 2020	Jun. 07, 2021
11	RF cables2 (30MHz-1GHz)	Huber+Suhnar	30MHz-1GHz	1486150	Jun. 08, 2020	Jun. 07, 2021
12	RF cables3 (1GHz-40GHz)	Huber+Suhnar	1GHz-40GHz	1607106	Jun. 08, 2020	Jun. 07, 2021
13	Power Metter	Keysight	E4419B	\	Jun. 08, 2020	Jun. 07, 2021
14	Power Sensor (AV)	Keysight	E9 300A	\	Jun. 08, 2020	Jun. 07, 2021
15	Signal Analyzer 20kHz-26.5GHz	KEYSIGHT	N9020A	MY49100060	Jun. 04, 2020	Jun. 03, 2021
16	Spectrum Analyzer 9kHz-40GHz	R&S	FSP40	100363	Jun. 04, 2020	Jun. 03, 2021
17	D.C. Power Supply	LongWei	TPR-6405D	\	\	\
18	Software	Frad	EZ-EMC	FA-03A2 RE	\	\

Conduction Test equipment

Item	Equipment	Manufacturer	Type No.	Serial No.	Last calibration	Calibrated until
1	Test Receiver	R&S	ESR3	102075	Jun. 08, 2020	Jun. 07, 2021
2	LISN	SCHWARZBECK	NSLK8127	8127739	Jun. 08, 2020	Jun. 07, 2021
3	LISN	R&S	ENV216	101375	Jun. 04, 2020	Jun. 03, 2021
4	RF cables	Huber+Suhnar	9kHz-30MHz	B1702988-0008	Jun. 08, 2020	Jun. 07, 2021
5	Software	Frad	EZ-EMC	EMC-CON 3A1	\	\

3. EMC EMISSION TEST

3.1 CONDUCTED EMISSION MEASUREMENT

3.1.1 POWER LINE CONDUCTED EMISSION Limits (Frequency Range 150KHz-30MHz)

FREQU NCY (MHz)	Limit (dBuV)		Standard
	Quasi-peak	Average	
0.15 -0.5	66 - 56 *	56 - 46 *	FCC
0.50 -5.0	56.00	46.00	FCC
5.0 -30.0	60.00	50.00	FCC

Note:

(1) The tighter limit applies at the band edges.

(2) The limit of " * " marked band means the limitation decreases linearly with the logarithm of the frequency in the range.

The following table is the setting of the receiver

Receiver Parameters	Setting
Attenuation	10 dB
Start Frequency	0.15 MHz
Stop Frequency	30 MHz
IF Bandwidth	9 kHz

3.1.2 TEST PROCEDURE

a. The EUT was placed 0.8 meters from the horizontal ground plane with EUT being connected to the power mains through a line impedance stabilization network (LISN). All other support equipments powered from additional LISN(s). The LISN provide 50 Ohm/ 50uH of coupling impedance for the measuring instrument.
b. Interconnecting cables that hang closer than 40 cm to the ground plane shall be folded back and forth in the center forming a bundle 30 to 40 cm long.
c. I/O cables that are not connected to a peripheral shall be bundled in the center. The end of the cable may be terminated, if required, using the correct terminating impedance. The overall length shall not exceed 1 m.
d. LISN at least 80 cm from nearest part of EUT chassis.
e. For the actual test configuration, please refer to the related Item –EUT Test Photos.

3.1.3 DEVIATION FROM TEST STANDARD

No deviation

3.1.4 TEST SETUP

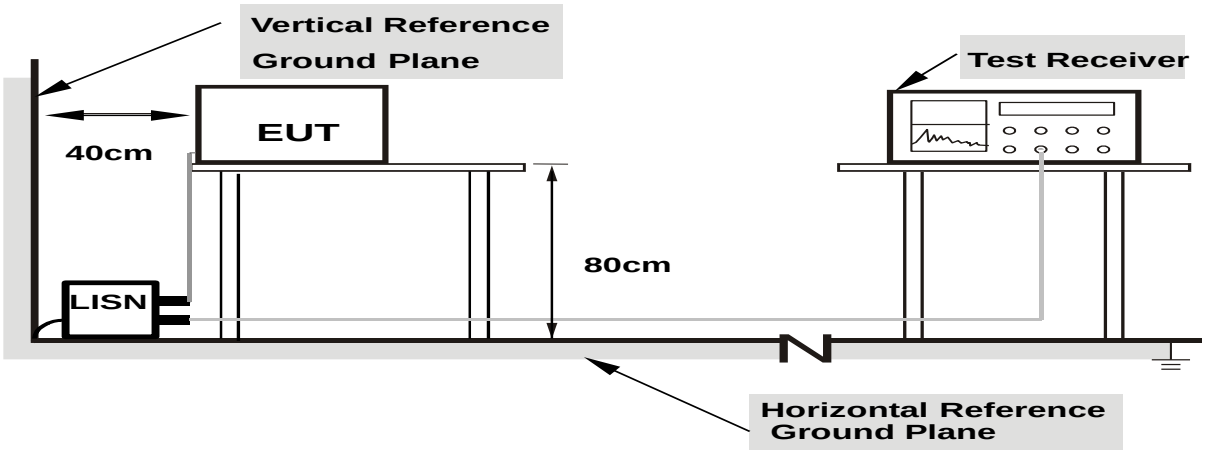

Note: 1.Support units were connected to second LISN.
2.Both of LISNs (AMN) are 80 cm from EUT and at least 80 from other units and other metal planes

3.1.5 EUT OPERATING CONDITIONS

The EUT was configured for testing in a typical fashion (as a customer would normally use it). The EUT has been programmed to continuously transmit during test. This operating condition was tested and used to collect the included data.

3.1.6 TEST RESULTS

The EUT is powered by the DC battery only and has no antenna port, the test item is not applicable.

3.2 RADIATED EMISSION MEASUREMENT

3.2.1 RADIATED EMISSION LIMITS (Frequency Range 9kHz-1000MHz)

20dBc in any 100 kHz bandwidth outside the operating frequency band. In case the emission fall within the restricted band specified on 15.205(a), then the 15.231(b) limit in the table below has to be followed.

Frequencies(MHz)	Field Strength(micorvolts/meter)	Measurement Distance(meters)
0.009~0.490	2400/F(KHz)	300
0.490~1.705	24000/F(KHz)	30
1.705~30.0	30	30
30~88	100	3
88~216	150	3
216~960	200	3
Above 960	500	3

LIMITS OF RADIATED EMISSION MEASUREMENT (Above 1000MHz)

FREQUENCY (MHz)	Limit (dBuV/m) (at 3M)	
	PEAK	AVERAGE
Above 1000	74	54

Notes:

(1) The limit for radiated test was performed according to FCC PART 15C.

(2) The tighter limit applies at the band edges.

(3) Emission level (dBuV/m)=20log Emission level (uV/m).

FUNDAMENTAL AND HARMONICS EMISSION LIMITS

Fundamental Frequency (MHz)	Field Strength of Fundamental (microvolts/meter)	Field Strength of Spurious Emissions (microvolts/meter)
40.66 - 40.70	2,250	225
70 - 130	1,250	125
130 - 174	1,250 to 3,750 **	125 to 375 **
174 - 260	3,750	375
260 - 470	3,750 to 12,500 **	375 to 1,250 **
Above 470	12,500	1,250

** linear interpolations

[Where F is the frequency in MHz, the formulas for calculating the maximum permitted fundamental field strengths are as follows: for the band 130-174 MHz, µV/m at 3 meters = 56.81818(F) - 6136.3636; for the band 260-470 MHz, µV/m at 3 meters = 41.6667(F) - 7083.3333. The maximum permitted unwanted emission level is 20 dB below the maximum permitted fundamental level.]

FREQUENCY RANGE OF RADIATED MEASUREMENT (For unintentional radiators)

Highest frequency generated or Upper frequency of measurement used in the device or on which the device operates or tunes (MHz)	Range (MHz)
Below 1.705	30
1.705 – 108	1000
108 – 500	2000
500 – 1000	5000
Above 1000	5th harmonic of the highest frequency or 40 GHz, whichever is lower

Spectrum Parameter	Setting
Attenuation	Auto
Start Frequency	1000 MHz
Stop Frequency	10th carrier harmonic
RBW / VBW setting	1 MHz / 1 MHz for Peak, 1 MHz / 10Hz for Average

Receiver Parameter	Setting
Attenuation	Auto
Start ~ Stop Frequency	9kHz~150kHz / RB 200Hz for QP
Start ~ Stop Frequency	150kHz~30MHz / RB 9kHz for QP
Start ~ Stop Frequency	30MHz~1000MHz / RB 120kHz for QP

3.2.2 TEST PROCEDURE

a. The measuring distance of at 3 m shall be used for measurements at frequency up to 1GHz. For frequencies above 1GHz, any suitable measuring distance may be used.
b. The EUT was placed on the top of a rotating table 0.8 meters above the ground at a 3 meter open area test site. The table was rotated 360 degrees to determine the position of the highest radiation.
c. The height of the equipment or of the substitution antenna shall be 0.8 m; above 1GHz, the height was 1.5m, the height of the test antenna shall vary between 1 m to 4 m. Both horizontal and vertical polarizations of the antenna are set to make the measurement.
d. The initial step in collecting conducted emission data is a spectrum analyzer peak detector mode pre-scanning the measurement frequency range. Significant peaks are then marked and then Quasi Peak detector mode re-measured.
e. If the Peak Mode measured value compliance with and lower than Quasi Peak Mode Limit, the EUT shall be deemed to meet QP Limits and then no additional QP Mode measurement performed.
f. For the actual test configuration, please refer to the related Item –EUT Test Photos.

Note:

Both horizontal and vertical antenna polarities were tested
and performed pretest to three orthogonal axis. The worst case was X axis and the emissions were reported

3.2.3 TEST SETUP

（A）Radiated Emission Test-Up Frequency Below 30MHz

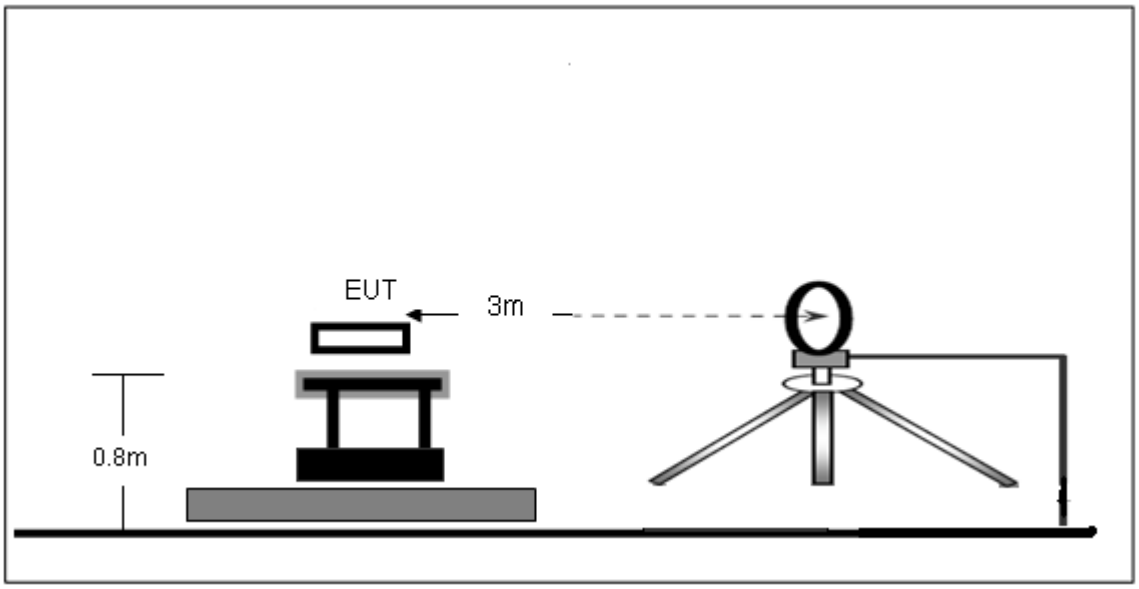

（B）Radiated Emission Test-Up Frequency 30MHz~1GHz

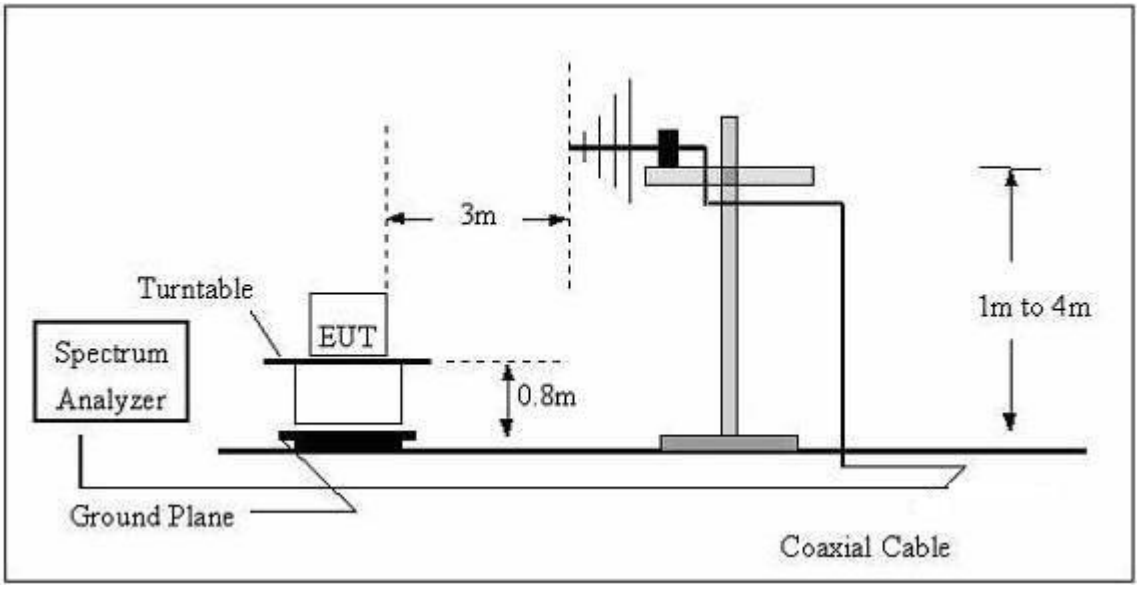

（C）Radiated Emission Test-Up Frequency Above 1GHz

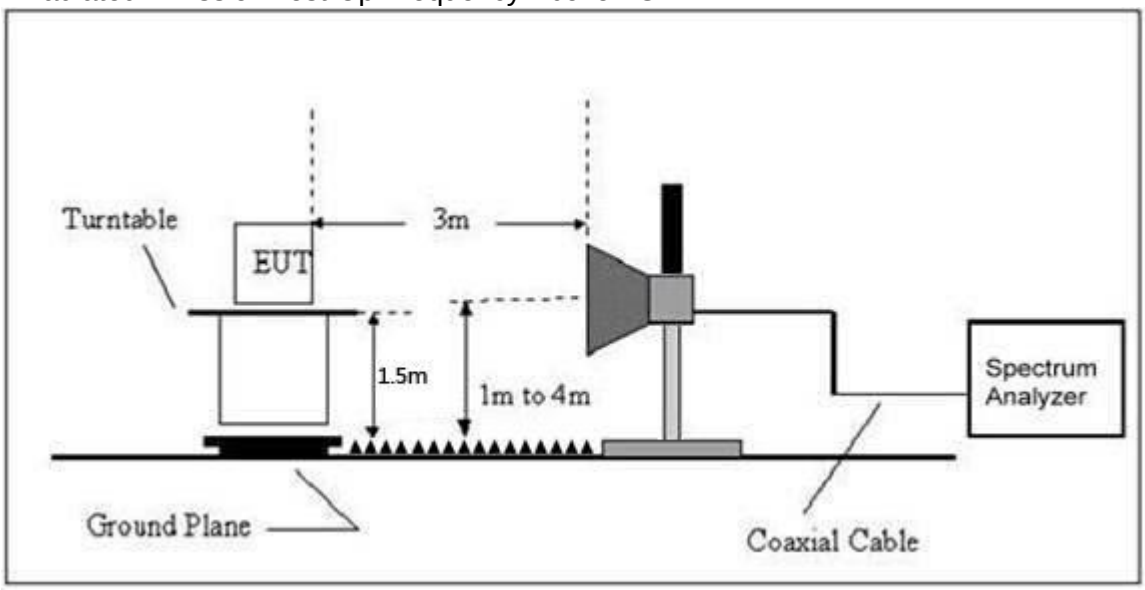

3.2.4 EUT OPERATING CONDITIONS

The EUT tested system was configured as the statements of 2.4 Unless otherwise a special operating condition is specified in the follows during the testing.

3.2.5 TEST RESULTS

Radiated Spurious Emission (Below 9KHz – 30MHz)

Temperature :	26 ℃	Relative Humidity :	54%
Pressure :	101 kPa	Polarization :	---
Test Voltage :	DC 3V		
Test Mode :	TX Mode		

Freq.	Reading	Limit	Margin	State
(MHz)	(dBuV/m)	(dBuV/m)	(dB)	P/F
--	--	--	--	PASS
--	--	--	--	PASS

NOTE:
The amplitude of spurious emissions which are attenuated by more than 20dB below the permissible value has no need to be reported.
Distance extrapolation factor =40 log (specific distance/test distance)(dB);
Limit line = specific limits(dBuv) + distance extrapolation factor.

Radiated Spurious Emission (Between 30MHz – 1GHz)

Temperature :	26 ℃	Relative Humidity :	54%
Pressure :	101 kPa	Polarization :	Horizontal
Test Voltage :	DC 3V		
Test Mode :	TX Mode		

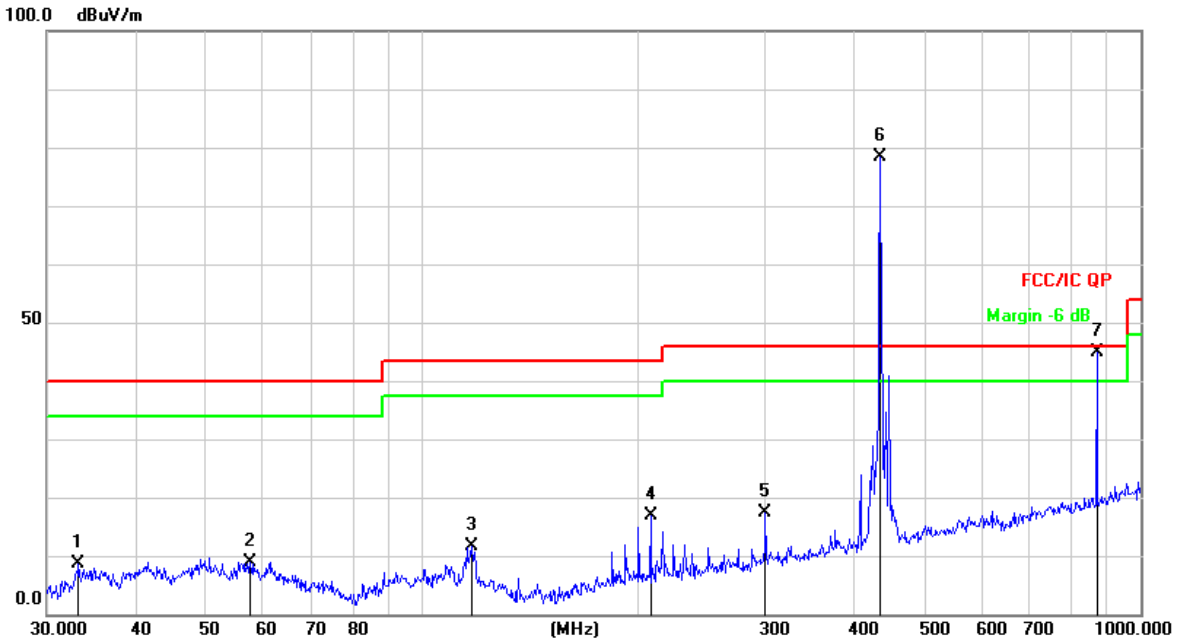

No.	Frequency (MHz)	Reading (dBuV/m)	Correct Factor(dB/m)	Result (dBuV/m)	Limit (dBuV/m)	Margin (dB)	Remark
1	33.2111	25.30	-16.68	8.62	40.00	-31.38	QP
2	57.5938	24.43	-15.65	8.78	40.00	-31.22	QP
3	117.3602	29.08	-17.40	11.68	43.50	-31.82	QP
4	207.8498	32.96	-16.12	16.84	43.50	-26.66	QP
5	300.3672	31.02	-13.59	17.43	46.00	-28.57	QP
6	434.0649	88.78	-10.33	78.45	100.80	-22.35	peak
7	869.1299	46.89	-2.13	44.76	80.80	-36.04	peak

Remark:

Factor = Antenna Factor + Correct Factor.

Correct Factor= Cable Loss – Pre-amplifier

Temperature :	26 ℃	Relative Humidity :	54%
Pressure :	101 kPa	Polarization :	Vertical
Test Voltage :	DC 3V		
Test Mode :	TX Mode		

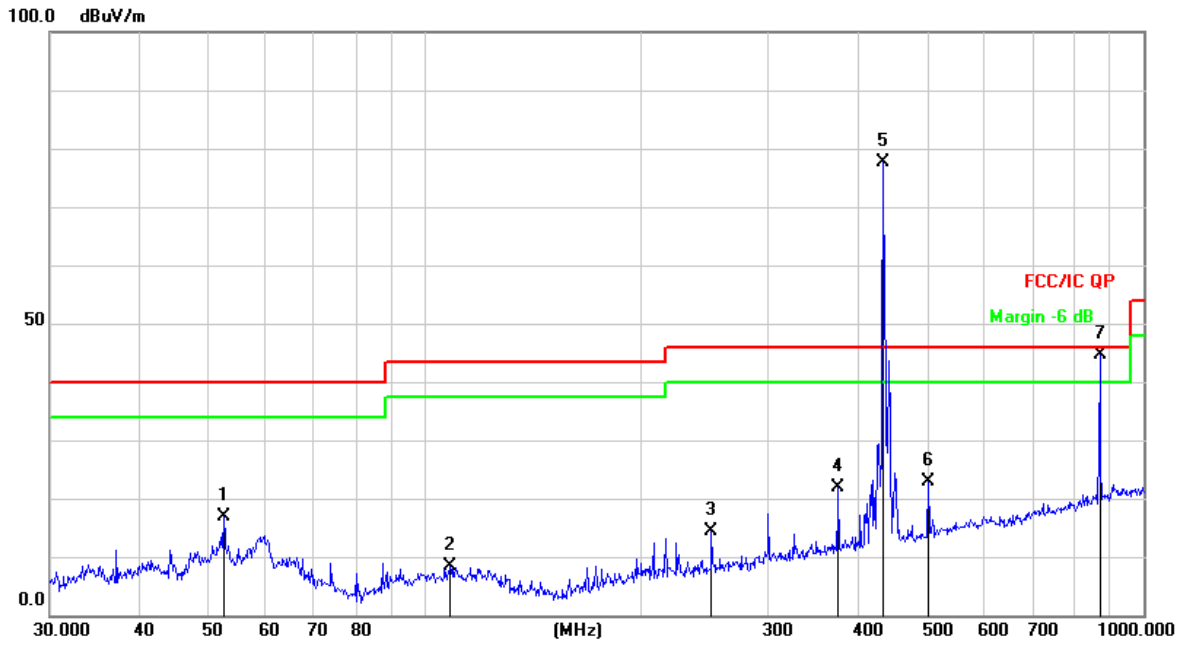

No.	Frequency (MHz)	Reading (dBuV/m)	Correct Factor(dB/m)	Result (dBuV/m)	Limit (dBuV/m)	Margin (dB)	Remark
1	52.3912	31.99	-15.10	16.89	40.00	-23.11	QP
2	108.2667	25.09	-16.81	8.28	43.50	-35.22	QP
3	250.3009	29.46	-15.14	14.32	46.00	-31.68	QP
4	375.9384	33.54	-11.64	21.90	46.00	-24.10	QP
5	434.0649	87.85	-10.33	77.52	108.80	-31.28	peak
6	501.1788	31.67	-8.91	22.76	46.00	-23.24	QP
7	869.1299	46.86	-2.13	44.73	80.80	-36.07	peak

Remark:

Factor = Antenna Factor + Correct Factor.

Correct Factor= Cable Loss – Pre-amplifier

For average Emission

Frequency MHz	Peak Level dBuV/m	Duty cycle factor	AverageLevel dBuV/m	Limit AV	Margin	Polarization
433.92	78.45	-5.19	73.26	80.80	-7.54	Horizontal
867.84	44.76	-5.19	39.57	60.80	-21.23	Horizontal

Notes: 1. Average emission Level = Peak Level + Duty cycle factor
2.Duty cycle level please see clause 5.

Frequency MHz	Peak Level dBuV/m	Duty cycle factor	AverageLevel dBuV/m	Limit AV	Margin	Polarization
433.92	77.52	-5.19	72.33	80.8	-8.47	Vertical
867.84	44.73	-5.19	39.54	60.8	-21.26	Vertical

Notes: 1. Average emission Level = Peak Level + Duty cycle factor
2. Duty cycle level please see clause 5.

Radiated Spurious Emission (1GHz to 10th harmonics)

Frequency MHz	Peak Level dBuV/m	Duty cycle factor	Average Level dBuV/m	Limit		Margin dB		Polarization
				PK	AV	PK	AV	
1301.76	48.63	-5.19	43.44	80.80	60.80	-32.17	-17.36	Vertical
1735.26	47.61	-5.19	42.42	80.80	60.80	-33.19	-18.38	Vertical
2603.55	45.53	-5.19	40.34	80.80	60.80	-35.27	-20.46	Vertical
3037.47	42.41	-5.19	37.22	80.80	60.80	-38.39	-23.58	Vertical
3471.33	43.76	-5.19	38.57	80.80	60.80	-37.04	-22.23	Vertical
3905.25	45.24	-5.19	40.05	80.80	60.80	-35.56	-20.75	Vertical
1301.77	50.05	-5.19	44.86	80.80	60.80	-30.75	-15.94	Horizontal
1735.26	49.57	-5.19	44.38	80.80	60.80	-31.23	-16.42	Horizontal
2603.54	48.19	-5.19	43.00	80.80	60.80	-32.61	-17.80	Horizontal
3037.46	47.69	-5.19	42.50	80.80	60.80	-33.11	-18.30	Horizontal
3471.35	46.67	-5.19	41.48	80.80	60.80	-34.13	-19.32	Horizontal
3905.22	45.74	-5.19	40.55	80.80	60.80	-35.06	-20.25	Horizontal

Notes: 1.Average emission Level = Peak Level + Duty cycle factor

2.Duty cycle level please see clause 5.

3. Pulse Desensitization Correction Factor

Pulse Width (PW) = 62.60ms

2/PW = 2/62.60ms =0.032 kHz

RBW (100 kHz) > 2/PW (0.032 kHz)

Therefore PDCF is not needed

4.Other harmonics emissions are lower than 20dB below the allowable limit.

4. BANDWIDTH TEST

4.1 APPLIED PROCEDURES / LIMIT

According to FCC 15.231(c) requirement:

The bandwidth of the emission shall be no wider than 0.25% of the center frequency for devices operating between 70 MHz to 900 MHz. Those devices operating above 900 MHz, the emission spurious shall be no wider than 0.5% of the center frequency. Bandwidth is determined at the points 20 dB down from the modulated carrier.

B.W (20dBc) Limit = 0.25% * f(MHz) = 0.25% * 433.92MHz = 1.0848MHz

Spectrum Parameter	Setting
Attenuation	Auto
Span Frequency	> Measurement Bandwidth or Channel Separation
RB	30kHz
VB	≥RBW
Detector	Peak
Trace	Max Hold
Sweep Time	Auto

4.1.1 TEST PROCEDURE

a. The EUT was directly connected to the spectrum analyzer and antenna output port as show in the block diagram below,
b. Spectrum Setting : RBW= 30kHz, VBW≥ RBW, Sweep time = Auto.

4.1.2 DEVIATION FROM STANDARD

No deviation.

4.1.3 TEST SETUP

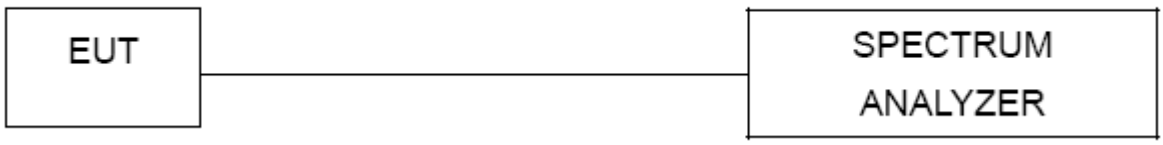

4.1.4 EUT OPERATION CONDITIONS

The EUT tested system was configured as the statements of 2.4 Unless otherwise a special operating condition is specified in the follows during the testing.

4.1.5 TEST RESULTS

Temperature :	26 ℃	Relative Humidity :	54%
Pressure :	101kPa	Test Voltage :	DC 3V
Test Mode :	Mode 1		

Frequency	20dB Bandwidth (kHz)	Limit (MHz)	Result
433.9MHz	105.1	1.0848	PASS

Mode 1

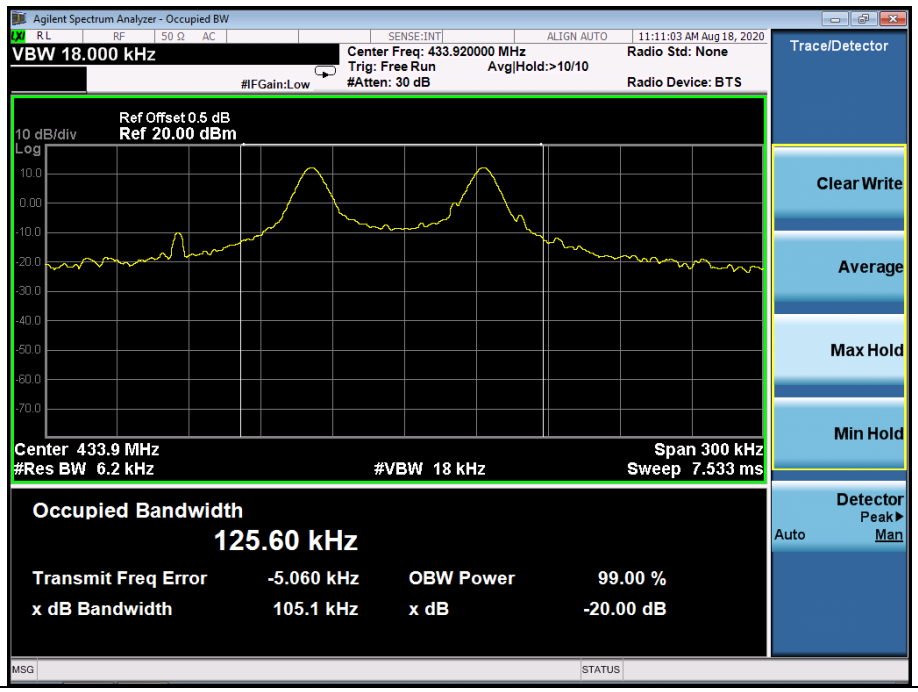

5. CALCULATION OF AVERAGE FACTOR

The output field strengths of specification in accordance with the FCC rules specify measurements with an average detector. During the test, a spectrum analyzer incorporating a peak detector was used. Therefore, a reduction factor can be applied to the resultant peak signal level and compared to the limit for measurement instrumentation incorporating an average detector.

The duty cycle is measured in 100 ms or the repetition cycle period, whichever is a shorter time frame. The duty cycle is measured by placing the spectrum analyzer to set zero span at 100kHz resolution bandwidth.

Averaging factor in dB =20log (duty cycle)

T_{on}=34.40(ms)

T=62.60(ms)

The duty cycle =34.4/62.60*100%=55%

Therefore, the averaging factor is found by 20*log(T_{on}/T)= 20*log(34.4/62.60)=-5.19dB

Test plot as follows:

Note: During the 100ms, the amount of pulse and on-time of pulse are the same for every pulse train.

Cycle

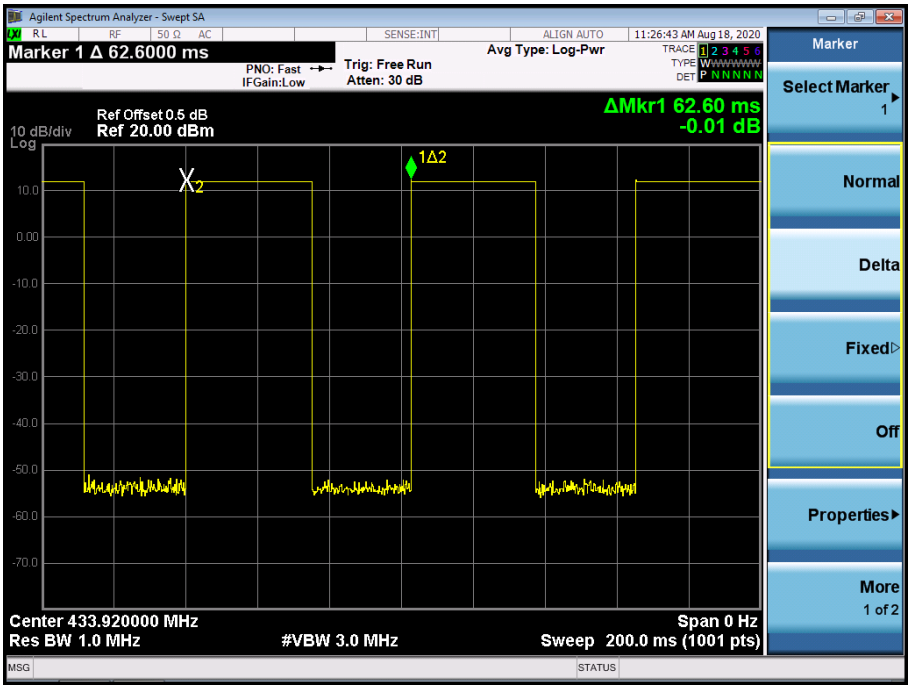

On-time

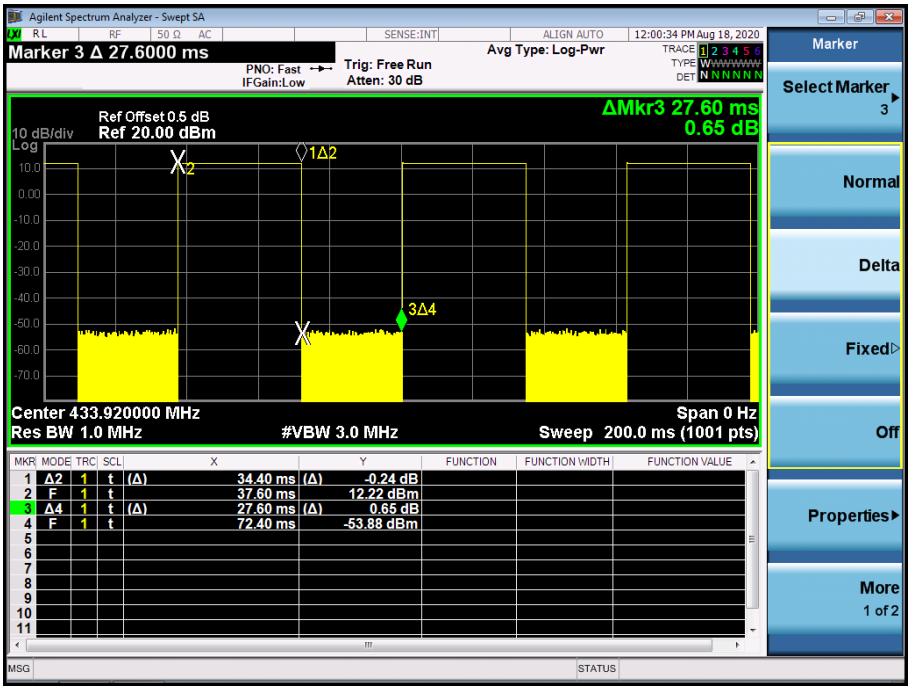
Agilent Spectrum Analyzer - Swept SA
Marker 3 Δ 27.6000 ms
Avg Type: Log-Pwr
Trig: Free Run
Atten: 30 dB
PNO: Fast
IFGain:Low
Ref Offset 0.5 dB
10 dB/div
Ref 20.00 dBm
ΔMkr3 27.60 ms
0.65 dB
1Δ2
3Δ4
Center 433.920000 MHz
Res BW 1.0 MHz
#VBW 3.0 MHz
Span 0 Hz
Sweep 200.0 ms (1001 pts)
1 Δ2 1 t (Δ) 34.40 ms (Δ) -0.24 dB
2 F 1 t 37.60 ms 12.22 dBm
3 Δ4 1 t (Δ) 27.60 ms (Δ) 0.65 dB
4 F 1 t 72.40 ms -53.88 dBm
Marker
Select Marker 3
Normal
Delta
Fixed
Off
Properties
More 1 of 2

6. DWELL TIME

APPLICABLE STANDARD

According to FCC 15.231(a) requirement:

A manually operated transmitter shall employ a switch that will automatically deactivate the transmitter within not more than 5 seconds of being released.

TEST PROCEDURE

a) Check the calibration of the measuring instrument using either an internal calibrator or a known signal from an external generator.
b) Position the EUT without connection to measurement instrument. Turn on the EUT and connect its antenna terminal to measurement instrument via a low loss cable. Then set it to any one measured frequency within its operating range, and make sure the instrument is operated in its linear range.
c) Set RBW to 100 kHz and VBW of spectrum analyzer to 300 kHz with a convenient frequency span including 100 kHz bandwidth from band edge.
d) Measure the highest amplitude appearing on spectral display and set it as a reference level. Plot the graph with marking the highest point and edge frequency.
e) Repeat above procedures until all measured frequencies were complete.

6.1 DEVIATION FROM STANDARD

No deviation.

6.2 TEST SETUP

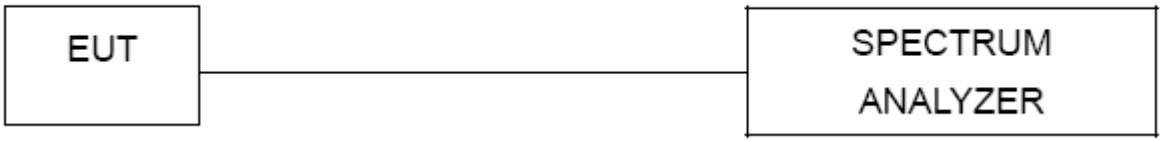

6.3 EUT OPERATION CONDITIONS

The EUT tested system was configured as the statements of 2.4 Unless otherwise a special operating condition is specified in the follows during the testing.

6.4 TEST RESULTS

Dwell time (second)	Limit (second)	Result
220.0ms	<5s	Pass

Test plot as follows:

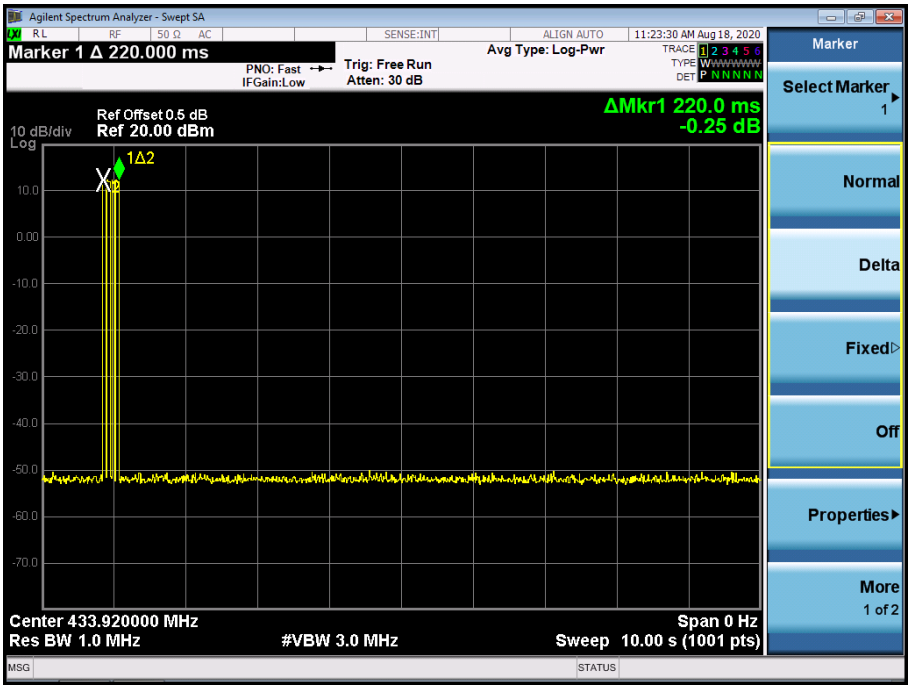

7. ANTENNA REQUIREMENT

7.1 STANDARD REQUIREMENT

15.203 requirement: For intentional device, according to 15.203: an intentional radiator shall be designed to ensure that no antenna other than that furnished by the responsible party shall be used with the device.

7.2 EUT ANTENNA

The EUT antenna is the PCB antenna. It comply with the standard requirement.

8. EUT TEST PHOTO

Radiated Measurement Photos

9. EUT PHOTO

※※※※※ **END OF REPORT** ※※※※※