Shenzhen Sperll Optoelectronic Technology Co., Ltd.

No. 3007 Shennan Middle Road, Futian Street, Futian District, Shenzhen, Guangdong Province

Antenna test report

			RBX		2022.10.10
RF Engineer	Wang Jiaxi	Structural engineer	Zhou Lei	Frequency band	2402~2480MHz

天线尺寸

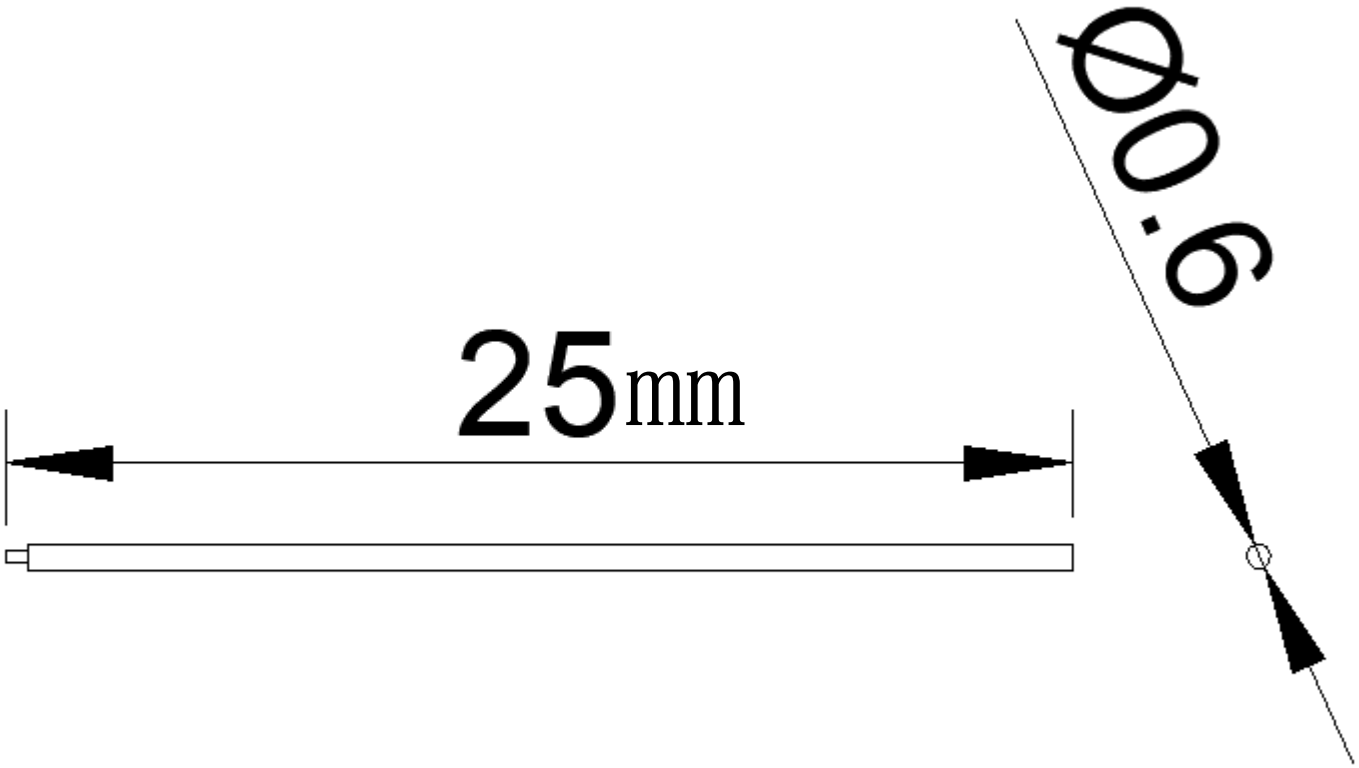

LOSS/SWR

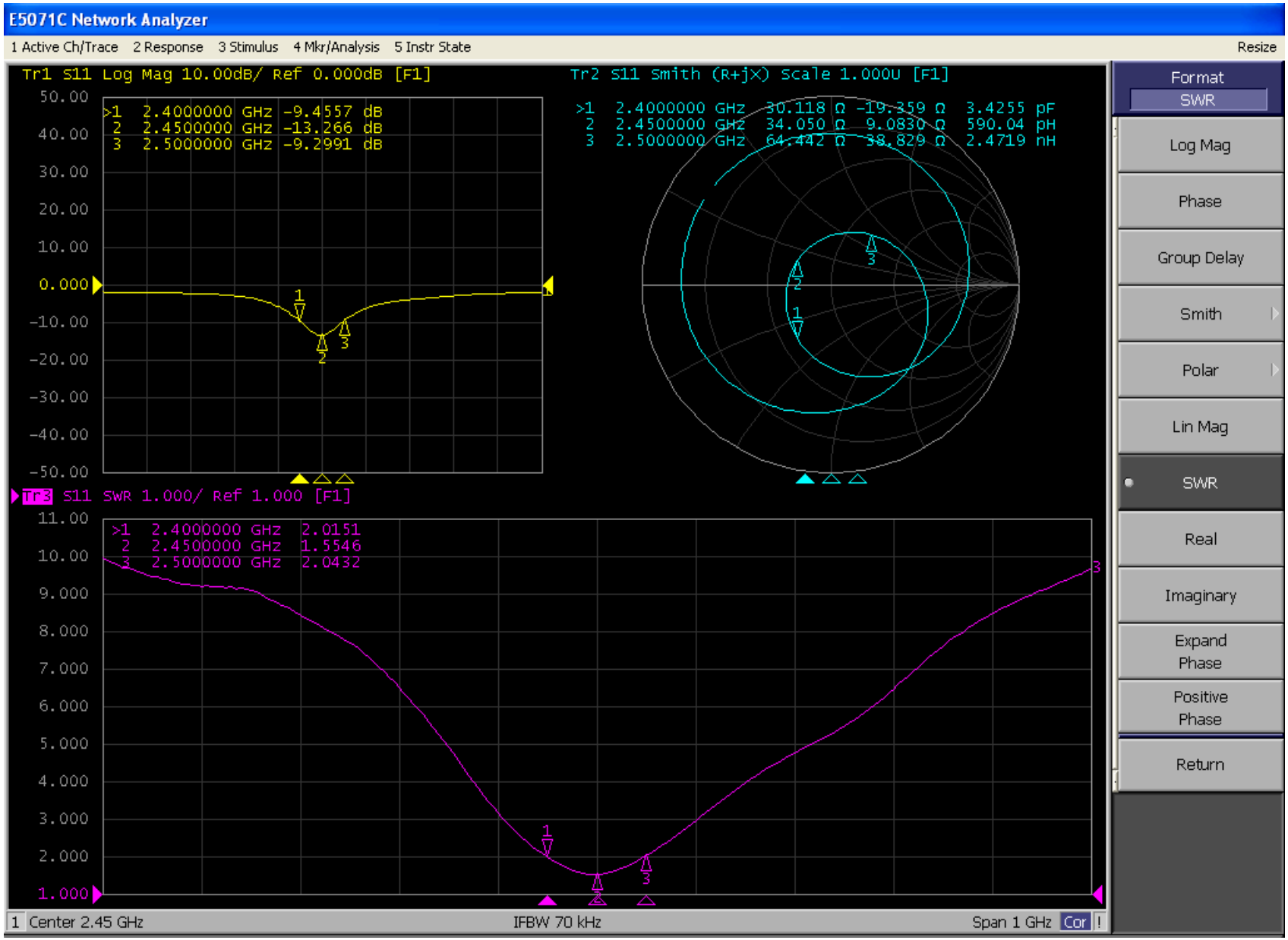
E5071C Network Analyzer
1 Active Ch/Trace 2 Response 3 Stimulus 4 Mkr/Analysis 5 Instr State
Resize
Tr1 S11 Log Mag 10.00dB/ Ref 0.000dB [F1]
>1 2.4000000 GHz -9.4557 dB
2 2.4500000 GHz -13.266 dB
3 2.5000000 GHz -9.2991 dB
Tr2 S11 Smith (R+jX) Scale 1.000U [F1]
>1 2.4000000 GHz 30.118 Ω -19.359 Ω 3.4255 pF
2 2.4500000 GHz 34.050 Ω 9.0830 Ω 590.04 pH
3 2.5000000 GHz 64.442 Ω 38.829 Ω 2.4719 nH
Tr3 S11 SWR 1.000/ Ref 1.000 [F1]
>1 2.4000000 GHz 2.0151
2 2.4500000 GHz 1.5546
3 2.5000000 GHz 2.0432
Format
SWR
Log Mag
Phase
Group Delay
Smith
Polar
Lin Mag
SWR
Real
Imaginary
Expand Phase
Positive Phase
Return
1 Center 2.45 GHz
IFBW 70 kHz
Span 1 GHz
Cor

无源测试数据

Frequency ID	1	2	3	4	5	6	7	8	9	10	11
Frequency (MHz)	2400.0	2410.0	2420.0	2430.0	2440.0	2450.0	2460.0	2470.0	2480.0	2490.0	2500.0
Efficiency (dBi)	-8.42	-8.38	-8.34	-8.53	-8.62	-8.77	-8.84	-8.85	-8.79	-9.20	-9.53
Gain (dBi)	-3.45	-3.48	-3.46	-3.64	-3.69	-3.76	-3.88	-4.12	-4.36	-4.91	-5.01
Efficiency (%)	14.39	14.53	14.66	14.02	13.73	13.28	13.08	13.04	13.20	12.03	11.15
Directivity (dB)	4.97	4.89	4.88	4.90	4.93	5.01	4.96	4.72	4.43	4.29	4.52
Peak Gain Position (Theta)	98.00	98.00	98.00	98.00	98.00	98.00	98.00	98.00	98.00	97.00	97.00
Peak Gain Position (Phi)	332.00	333.00	333.00	332.00	333.00	334.00	337.00	338.00	338.00	336.00	333.00
Efficiency ThetaPol (%)	10.97	11.11	11.19	10.72	10.46	10.09	9.97	9.73	9.69	8.73	8.28
Efficiency PhiPol (%)	3.42	3.42	3.47	3.29	3.27	3.19	3.11	3.30	3.52	3.29	2.87
Upper Hem. Efficiency (%)	7.29	7.47	7.60	7.30	7.17	6.89	6.64	6.50	6.54	5.92	5.52
Lower Hem. Efficiency (%)	7.10	7.06	7.05	6.71	6.56	6.39	6.44	6.54	6.66	6.11	5.63

VER7

T90(H)圆度	8.87	9.37	9.85	10.06	9.68	9.36	9.03	8.85	8.45	8.15	8.95
Gain 15deg (dBi)											
E1(XZ)波瓣宽度	80.00	79.00	79.00	80.00	81.00	80.00	74.00	71.00	70.00	71.00	79.00
E1(XZ)前后比	1.47	1.75	1.78	1.41	1.11	1.25	1.96	2.24	2.23	1.85	1.65
E2(YZ)波瓣宽度	44.00	44.00	44.00	45.00	45.00	46.00	69.00	73.00	72.00	70.00	53.00
E2(YZ)前后比	3.84	4.27	4.51	4.03	3.56	3.05	2.30	1.96	2.11	2.32	2.44
最大增益处轴比(P)	20.92	24.31	20.99	17.04	14.10	12.92	9.81	9.97	10.55	11.45	14.22
仰角10度最差(大)轴比(P)	52.20	51.92	51.48	51.25	48.98	46.35	50.77	41.20	53.13	41.58	52.96
Hc(XY)波瓣宽度	90.00	95.00	99.00	99.00	92.00	85.00	82.00	86.00	110.00	128.00	117.00
Hc(XY)前后比	1.32	1.32	1.26	1.28	1.53	1.90	2.08	2.00	1.63	1.37	1.32
左旋圆极化效率(%)	6.60	6.66	6.84	6.66	6.65	6.42	6.10	6.09	6.19	5.61	5.74
右旋圆极化效率(%)	7.78	7.87	7.82	7.35	7.08	6.86	6.98	6.95	7.01	6.42	5.41
Empty											

增益效果图

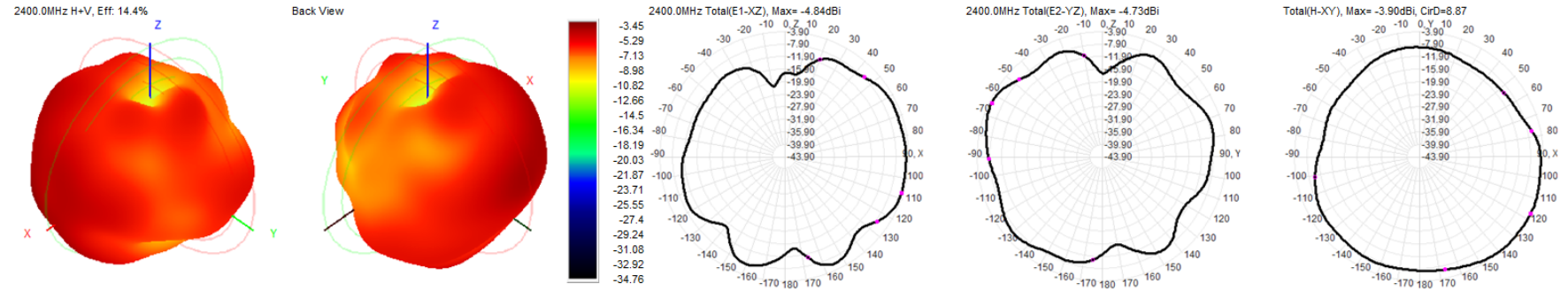
2400.0MHz H+V, Eff: 14.4%
Back View
2400.0MHz Total(E1-XZ), Max= -4.84dBi
2400.0MHz Total(E2-YZ), Max= -4.73dBi
Total(H-XY), Max= -3.90dBi, CirD=8.87

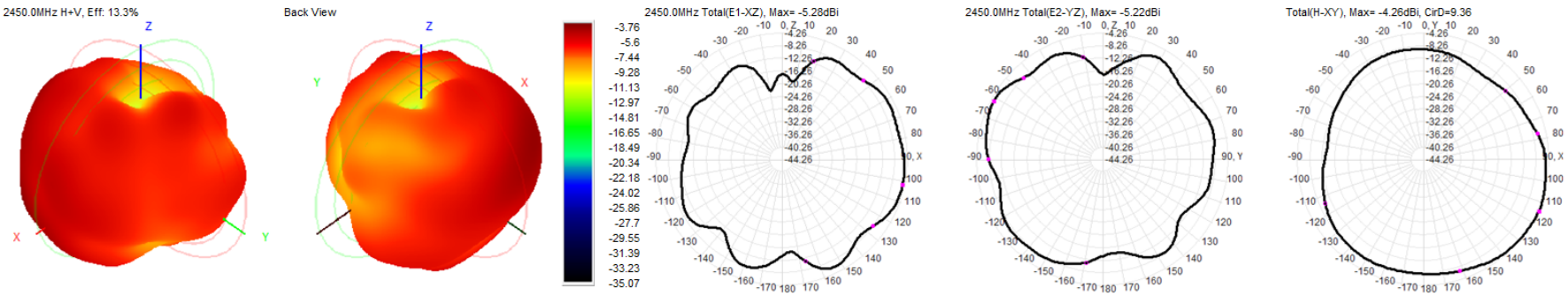
2450.0MHz H+V, Eff: 13.3%
Back View
2450.0MHz Total(E1-XZ), Max= -5.28dBi
2450.0MHz Total(E2-YZ), Max= -5.22dBi
Total(H-XY), Max= -4.26dBi, CirD=9.36

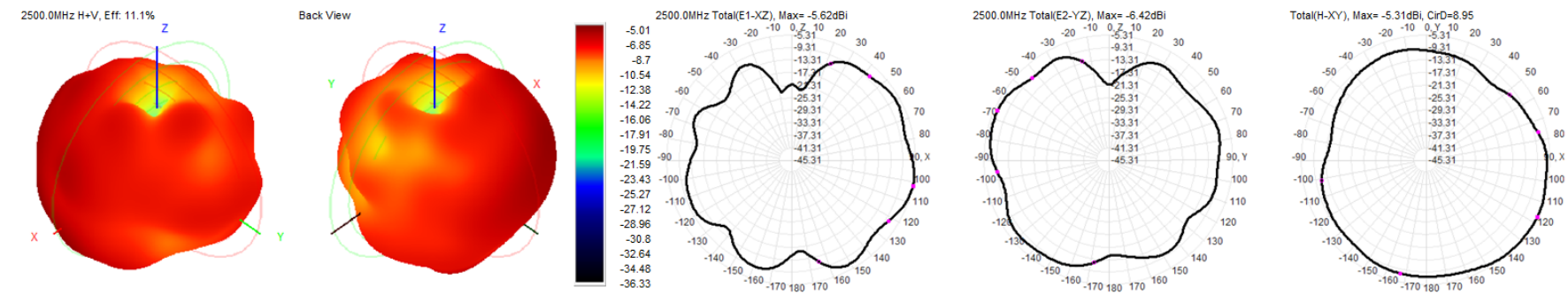
2500.0MHz H+V, Eff: 11.1%
Back View
2500.0MHz Total(E1-XZ), Max= -5.62dBi
2500.0MHz Total(E2-YZ), Max= -6.42dBi
Total(H-XY), Max= -5.31dBi, CirD=8.95

Peak Gain
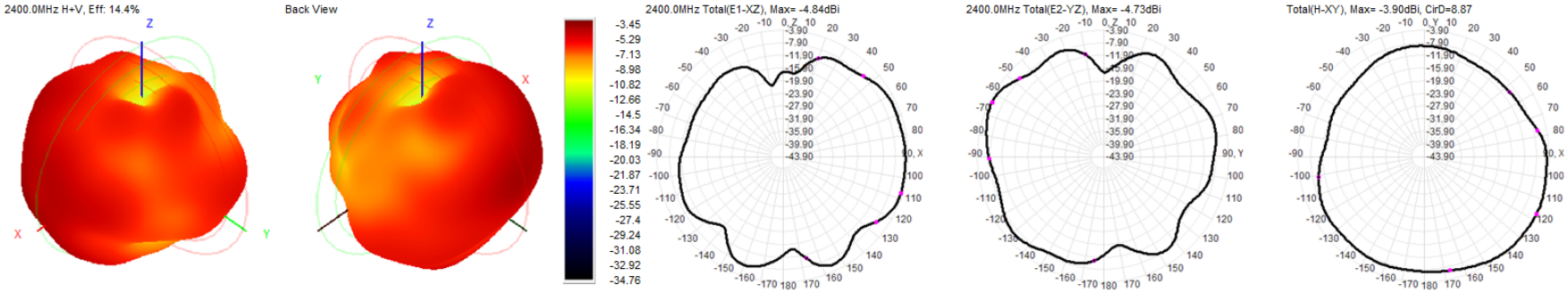
Frequency ID	1	
Frequency (MHz)	2402-2480	
Efficiency (dBi)	-8.42	
Gain (dBi)	-3.45	
Efficiency (%)	14.39	
Directivity (dB)	4.97	
Peak Gain Position (Theta)	98.00	
Peak Gain Position (Phi)	332.00	
Efficiency ThetaPol (%)	10.97	
Efficiency PhiPol (%)	3.42	
Upper Hem. Efficiency (%)	7.29	
Lower Hem. Efficiency (%)	7.10