FCC RADIO TEST REPORT
FCC ID: 2AZNP-XMM3106

Product:	LCD Smart Projector
Trade Mark:	Formovie, APPOTRONICS, Xming, WEMAX, WEWATCH
Model No.:	XMM3106
Family Model:	XMM3********, FMM3********, GFM3********(*=0-9, a-z, A-Z, - or blank, indicates for different market purposes)
Report No.:	N25082806735E
Issue Date:	Oct. 31, 2025

Prepared for

Formovie (Chongqing) Innovative Technology Co., Ltd.
4-401, #2 Longgang Road, Guojiatuo Area, Jiangbei District, Chongqing, China

Prepared by

Shenzhen NTEK Testing Technology Co., Ltd.
No. 24 Xinfa East Road, Xiangshan Community, Xinqiao Street, Baoan District, Shenzhen, Guangdong, People's Republic of China

Tel. 0755-23200050 Website: http://www.ntek.org.cn

TEST RESULT CERTIFICATION

Applicant's name ..... : Formovie (Chongqing) Innovative Technology Co., Ltd.

Address ..... : 4-401, #2 Longgang Road, Guojiatuo Area, Jiangbei District, Chongqing, China

Manufacturer's Name..... : Formovie (Chongqing) Innovative Technology Co., Ltd.

Address ..... : 4-401, #2 Longgang Road, Guojiatuo Area, Jiangbei District, Chongqing, China

Product description

Product name..... : LCD Smart Projector

Trademark ..... : Formovie, APPOTRONICS, Xming, WEMAX, WEWATCH

Model and/or type reference ..... : XMM3106

Family Model..... : XMM3*********, FMM3*********, GFM3*********(*=0-9, a-z, A-Z, - or blank, indicates for different market purposes)

Test Sample Number ..... S2509120020-1#

Standards..... : FCC Part15.407

Test procedure ..... ANSI C63.10-2020
KDB 789033 D02 General UNII Test Procedures New Rules v02r01
KDB 905462 D03 Client Without DFS New Rules v01r02
KDB 905462 D02 UNII DFS Compliance Procedures New Rules v02

This device described above has been tested by NTEK, and the test results show that the equipment under test (EUT) is in compliance with the FCC requirements. And it is applicable only to the tested sample identified in the report.

This report shall not be reproduced except in full, without the written approval of NTEK, this document may be altered or revised by NTEK, personnel only, and shall be noted in the revision of the document.

Date of Test .....

Date (s) of performance of tests ..... Sept. 12, 2025 ~ Oct. 29, 2025

Date of Issue..... Oct. 31, 2025

Test Result..... **Pass**

Prepared By :	Reviewed By :	Approved By :
Mary Hu	Aaron Cheng	Alex Li
(Project Engineer)	(Supervisor)	(Manager)

Table of Contents

	Page
1. SUMMARY OF TEST RESULTS	7
1.1 FACILITIES AND ACCREDITATIONS	8
1.2 MEASUREMENT UNCERTAINTY	8
2. GENERAL INFORMATION	9
2.1 GENERAL DESCRIPTION OF EUT	9
2.2 DESCRIPTION OF TEST MODES	12
2.3 BLOCK DIGRAM SHOWING THE CONFIGURATION OF SYSTEM TESTED	13
2.4 DESCRIPTION OF SUPPORT UNITS(CONDUCTED MODE)	14
2.5 EQUIPMENTS LIST FOR ALL TEST ITEMS	15
3. EMC EMISSION TEST	17
3.1 CONDUCTED EMISSION MEASUREMENT	17
3.1.1 APPLICABLE STANDARD	17
3.1.2 CONFORMANCE LIMIT	17
3.1.3 TEST CONFIGURATION	17
3.1.4 TEST PROCEDURE	18
3.1.5 TEST RESULTS	19
3.2 RADIATED EMISSION MEASUREMENT	27
3.2.1 APPLICABLE STANDARD	27
3.2.2 CONFORMANCE LIMIT	27
3.2.3 MEASURING INSTRUMENTS	27
3.2.4 TEST CONFIGURATION	28
3.2.5 TEST PROCEDURE	29
3.2.6 TEST RESULTS (9KHZ – 30 MHZ)	30
3.2.7 TEST RESULTS (30MHZ – 1GHZ)	31
3.2.8 TEST RESULTS (1GHZ-18GHZ)	39
3.2.9 TEST RESULTS (18GHZ-40GHZ)	43
4 POWER SPECTRAL DENSITY TEST	54
4.1 APPLIED PROCEDURES / LIMIT	54
4.2 TEST PROCEDURE	55
4.3 DEVIATION FROM STANDARD	55
4.4 TEST SETUP	55
4.5 EUT OPERATION CONDITIONS	55
4.6 TEST RESULTS	56
5. 26DB & 99% EMISSION BANDWIDTH	57
5.1 APPLIED PROCEDURES / LIMIT	57
5.2 TEST PROCEDURE	57
5.3 EUT OPERATION CONDITIONS	58

Table of Contents

Page

5.4 TEST RESULTS 58

6. MINIMUM 6 DB BANDWIDTH 59
6.1 APPLIED PROCEDURES / LIMIT 59
6.2 EST PROCEDURE 59
6.3 DEVIATION FROM STANDARD 59
6.4 TEST SETUP 59
6.5 EUT OPERATION CONDITIONS 59
6.6 TEST RESULTS 60

7. MAXIMUM CONDUCTED OUTPUT POWER 61
7.1 PPLIED PROCEDURES / LIMIT 61
7.6 TEST RESULTS 63

8. OUT OF BAND EMISSIONS 64
8.1 APPLICABLE STANDARD 64
8.2 TEST PROCEDURE 64
8.3 DEVIATION FROM STANDARD 65
8.4 TEST SETUP 65
8.5 EUT OPERATION CONDITIONS 65
8.6 TEST RESULTS 66

9. FREQUENCY STABILITY MEASUREMENT 67
9.1 LIMIT 67
9.2 TEST PROCEDURES 67
9.3 TEST SETUP LAYOUT 67
9.4 EUT OPERATION DURING TEST 67
9.5 TEST RESULTS 68

10. DYNAMIC FREQUENCY SELECTION(DFS) 80
10.1 APPLICABILITY OF DFS REQUIREMENTS 80
10.2 INTERFERENCE THRESHOLD VALUES, MASTER OR CLIENT INCORPORATING IN-SERVICE MONITORING 80
10.3 DFS RESPONSE REQUIREMENT VALUES 81
10.4 SHORT PULSE RADAR TEST WAVEFORMS 81
10.5 CALIBRATION SETUP AND DFS TEST RESULTS 82
10.6 CONDUCTED CALIBRATION SETUP 82
10.7 RADAR WAVEFORM CALIBRATION RESULT 82
10.8 IN-SERVICE MONITORING: CHANNEL MOVE TIME, CHANNEL CLOSING TRANSMISSION TIME AND NON-OCCUPANCY PERIOD 83
10.9 RESULT OF CHANNEL MOVE TIME, CHANNEL CLOSING TRANSMISSION TIME

Table of Contents

	Page
AND NON-OCCUPANCY PERIOD FOR CLIENT BEACON TEST	84
11. ANTENNA REQUIREMENT	85
11.1 STANDARD REQUIREMENT	85
11.2 EUT ANTENNA	85

Revision History

Report No.	Version	Description	Issued Date
N25082806735E	Rev.01	Initial issue of report	Oct. 31, 2025

1. SUMMARY OF TEST RESULTS

Test procedures according to the technical standards:

FCC Part15 (15.407) , Subpart E			
Standard Section	Test Item	Judgment	Remark
15.207	AC Power Line Conducted Emissions	PASS	
15.209(a), 15.407 (b)(1) 15.407 (b)(2) 15.407 (b)(3) 15.407 (b)(4) 15.407(b)(8)(9)	Spurious Radiated Emissions	PASS	
15.407 (a)	26 dB and 99% Emission Bandwidth	PASS	
15.407(e)	Minimum 6 dB bandwidth	PASS	
15.407 (a)	Maximum Conducted Output Power	PASS	
15.407 (b)(1) 15.407 (b)(2) 15.407 (b)(3) 15.407 (b)(4)	Band Edge	PASS	
15.407 (a)	Power Spectral Density	PASS	
15.407(b)	Spurious Emissions at Antenna Terminals	PASS	
15.407(g)	Frequency Stability Measurement	PASS	
15.407(h)	Dynamic Frequency Selection(DFS)	PASS	
15.203	Antenna Requirement	PASS	
15.407(c)	Automatically discontinue transmission	PASS	(Note 3)

NOTE:

(1)" N/A" denotes test is not applicable in this Test Report

(2) This device operates with a duty cycle greater than 99%

(3) The product is a client device, and the data transmission is limited by the AP.
When the information to be sent is missing or the operation fails,
the device will automatically stop sending and directly connect to the AP correctly again.

1.1 FACILITIES AND ACCREDITATIONS

FACILITIES

All measurement facilities used to collect the measurement data are located at

No. 24 Xinfa East Road, Xiangshan Community, Xinqiao Street, Baoan District, Shenzhen, Guangdong, People's Republic of China

The sites are constructed in conformance with the requirements of ANSI C63.7, ANSI C63.10 and CISPR Publication 22.

LABORATORY ACCREDITATIONS AND LISTINGS

Site Description

CNAS-Lab.	:	The Certificate Registration Number is L5516.
IC-Registration		The Certificate Registration Number is 9270A. CAB identifier:CN0074
FCC- Accredited		Test Firm Registration Number: 463705. Designation Number: CN1184
A2LA-Lab.		The Certificate Registration Number is 4298.01
Name of Firm	:	Shenzhen NTEK Testing Technology Co., Ltd.
Site Location	:	No. 24 Xinfa East Road, Xiangshan Community, Xinqiao Street, Baoan District, Shenzhen, Guangdong, People's Republic of China

1.2 MEASUREMENT UNCERTAINTY

The reported uncertainty of measurement y±U, where expended uncertainty U is based on a standard uncertainty multiplied by a coverage factor of k=2, providing a level of confidence of approximately 95 %.

No.	Item	Uncertainty
1	Conducted Emission Test	±2.80dB
2	RF power, conducted	±0.16dB
3	Spurious emissions, conducted	±0.21dB
4	All emissions, radiated(9KHz~30MHz)	±6dB
5	All emissions, radiated(30MHz~1GHz)	±2.64dB
6	All emissions, radiated(1GHz~6GHz)	±2.40dB
7	All emissions, radiated(> 6GHz)	±2.52dB
8	Temperature	±0.5°C
9	Humidity	±2%
10	Radio Frequency	±0.2ppm
11	Occupied bandwidth	±3.7%

2. GENERAL INFORMATION

2.1 GENERAL DESCRIPTION OF EUT

Equipment	LCD Smart Projector
Trade Mark	Formovie, APPOTRONICS, Xming, WEMAX, WEWATCH
Model Name	XMM3106
Family Model	XMM3*********, FMM3*********, GFM3*********(*=0-9, a-z, A-Z, - or blank, indicates for different market purposes)
Model Difference	All models are the same circuit and RF module, except for color and brand.
FCC ID	2AZNP-XMM3106
Product Description	
	Mode Supported: ☒802.11a ☒802.11n(HT20) ☒802.11n(HT40) ☒802.11ac(HT20) ☒802.11ac(HT40) ☒802.11ac(HT80)
	Data Rate: 802.11a: 6,9,12,18,24,36,48,54Mbps; 802.11n(HT20/HT40):MCS0-MCS15; 802.11ac(VHT20): NSS1, MCS0-MCS8 802.11ac(VHT40/VHT80):NSS1, MCS0-MCS9
	Modulation: OFDM with BPSK/QPSK/16QAM/64QAM
	Operating Frequency Range: ☒ U-NII-1: 5150 MHz ~5250MHz ☒ U-NII-2A: 5250MHz~5350MHz ☒ U-NII-2C: 5470MHz~5725MHz ☒ U-NII-3: 5725 MHz ~5850 MHz
	Function: ☐Outdoor AP ☐Indoor AP ☐Fixed P2P ☒Client
	DFS type: ☐master devices ☐Slave devices with radar detection ☒Slave devices without radar detection
	Support TPC: ☐YES ☒NO
	Antenna Type: Antenna 1: FPC Antenna Antenna 2: FPC Antenna
	Antenna Gain: Antenna 1: 2.54dBi; Antenna 2: 1.98dBi
	Smart system: ☒SISO for 802.11a/n/ac ☒MIMO for 802.11n/ac
	Based on the application, features, or specification exhibited in User's Manual, More details of EUT technical specification, please refer to the User's Manual.
Adapter	Model: ADS-96HLA-19-3 19072E Input: 100-240V~50/60Hz Max 1.5A Output: 19.0V⎓3.79A 72.0W
Battery	N/A
Rating	DC 19V from adapter
Connecting I/O Port(s)	Please refer to the User's Manual
HW Version	XMM3106
FW Version	N/A
SW Version	N/A

Note:

1. For a more detailed features description, please refer to the manufacturer's specifications or the User's Manual.
2. Frequency and Channel list:

Band	20MHz		40MHz		80MHz	
	Channel	Frequency	Channel	Frequency	Channel	Frequency
U-NII-1	36	5180 MHz	38	5190 MHz	42	5210 MHz
	40	5200 MHz	46	5230 MHz	-	-
	44	5220 MHz				
	48	5240 MHz				
U-NII-2A	52	5260 MHz	54	5270 MHz	58	5290 MHz
	56	5280 MHz	62	5310 MHz		
	60	5300 MHz				
	64	5320 MHz				
U-NII-2C	100	5500 MHz	102	5510 MHz	106	5530 MHz
	104	5520 MHz	110	5550 MHz	122	5610 MHz
	108	5540 MHz	118	5590 MHz		
	112	5560 MHz	126	5630 MHz		
	116	5580 MHz	134	5670 MHz		
	120	5600 MHz				
	124	5620 MHz				
	128	5640 MHz				
	132	5660 MHz				
	136	5680 MHz				
	140	5700 MHz				
U-NII-3	149	5745 MHz	151	5755 MHz	155	5775 MHz
	153	5765 MHz	159	5795 MHz		
	157	5785 MHz				
	161	5805 MHz				
	165	5825 MHz				

for 5G WIFI have two antennas, and different modes support different transmit mode what describe as Following form:

Mode	Tx/Rx
802.11a/n/ac	1TX, 1RX
802.11n/ac	1TX/2TX, 1RX/2RX

For 5GHz mode, Antenna 1,2 are transmitting, each with the different directional gain.
For MIMO mode, Directional gain=10log[$(10^{G0/20}+10^{G1/20})^2/N_{ANT}$] dBi =5.27dBi in 5GHz the 802.11n(20/40) ac(20/40/80) 5GHz has MIMO mode.

Note: G1 means antenna gain for ANT 1 in dBi.
G2 means antenna gain for ANT 2 in dBi.
N_{ANT} means the number of Antennas.

2.2 DESCRIPTION OF TEST MODES

To investigate the maximum EMI emission characteristics generates from EUT, the test system was pre-scanning tested base on the consideration of following EUT operation mode or test configuration mode which possible have effect on EMI emission level. Each of these EUT operation mode(s) or test configuration mode(s) mentioned above was evaluated respectively.

For Radiated Emission	
Final Test Mode	Description
Mode 1	Normal Link Mode
Mode 2	802.11a / n/ ac 20 CH36/ CH40/ CH48/CH52/CH56/CH64/CH100/CH120/CH140/CH149/ CH157/CH165
Mode 3	802.11n40/ac40 CH38/CH46/CH54/CH62/CH102/CH118/CH134/CH151/ CH159
Mode 4	802.11ac80 CH42/CH58/CH106/CH122/CH155

For Conducted Emission	
Final Test Mode	Description
Mode 1	Normal Link Mode
Mode 2	802.11a / n/ ac 20 CH36/ CH40/ CH48/CH52/CH56/CH64/CH100/CH120/CH140/CH149/ CH157/CH165
Mode 3	802.11n40/ac40 CH38/CH46/CH54/CH62/CH102/CH118/CH134/CH151/ CH159
Mode 4	802.11ac80 CH42/CH58/CH106/CH122/CH155

Note:

(1) The measurements are performed at the highest, middle, lowest available channels.

(2) The measurements are performed at all Bit Rate of Transmitter, the worst data was reported

2.3 BLOCK DIGRAM SHOWING THE CONFIGURATION OF SYSTEM TESTED

For AC Conducted Emission Mode

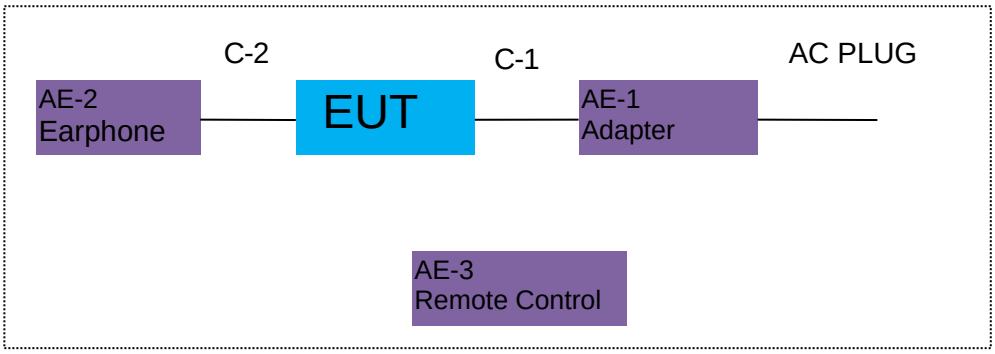

For Radiated Test Cases

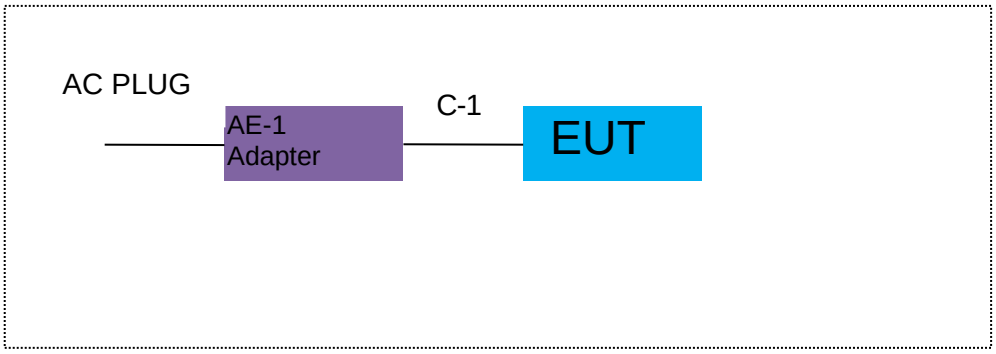

For Conducted Test Cases

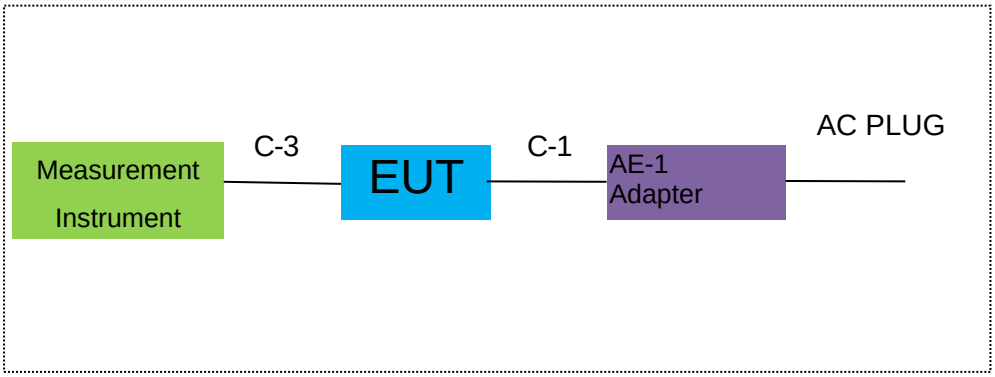

Note: 1. The temporary antenna connector is soldered on the PCB board in order to perform conducted tests and this temporary antenna connector is listed in the equipment list.

2.4 DESCRIPTION OF SUPPORT UNITS(CONDUCTED MODE)

The EUT has been tested as an independent unit together with other necessary accessories or support units. The following support units or accessories were used to form a representative test configuration during the tests.

Item	Equipment	Model/Type No.	Series No.	Note
AE-1	Adapter	ADS-96HLA-19-3 19072E	N/A	Peripherals
AE-2	Earphone	N/A	N/A	Peripherals
AE-3	Remote Control	N/A	N/A	Peripherals

Item	Cable Type	Shielded Type	Ferrite Core	Length
C-1	Power Cable	NO	NO	1.2m
C-2	Earphone Cable	NO	NO	1.0m
C-3	RF Cable	YES	NO	0.1m

Note:

(1) The support equipment was authorized by Declaration of Confirmation.

(2) For detachable type I/O cable should be specified the length in cm in 『Length』 column.

2.5 EQUIPMENTS LIST FOR ALL TEST ITEMS

Radiation& Conducted Test equipment

Item	Kind of Equipment	Manufacturer	Type No.	Serial No.	Last calibration	Calibrated until	Calibration period
1	Spectrum Analyzer	Agilent	E4440A	MY41000130	2025.04.24	2026.04.23	1 year
2	Spectrum Analyzer	Agilent	N9020A	MY49100060	2025.04.17	2026.04.16	1 year
3	Spectrum Analyzer	R&S	FSV40	101417	2025.04.17	2026.04.16	1 year
4	Test Receiver	R&S	ESPI7	101318	2025.04.17	2026.04.16	1 year
5	Bilog Antenna	TESEQ	CBL6111D	31216	2025.04.17	2026.04.16	1 year
6	50Ω Coaxial Switch	Anritsu	MP59B	6200983705	2024.04.26	2027.04.25	3 year
7	Horn Antenna	EM	EM-AH-10180	2011071402	2024.05.12	2027.05.11	3 year
8	Broadband Horn Antenna	SCHWARZBECK	BBHA 9170	803	2024.05.12	2027.05.11	3 year
9	Amplifier	EMC	EMC051835SE	980246	2025.04.24	2026.04.23	1 year
10	Active Loop Antenna	SCHWARZBECK	FMZB 1519 B	055	2024.05.17	2027.05.16	3 year
11	Power Meter	DARE	RPR3006W	15I00041SNO84	2025.04.17	2026.04.16	1 year
12	Test Cable (9KHz-30MHz)	N/A	R-01	N/A	2023.05.06	2026.05.05	3 year
13	Test Cable (30MHz-1GHz)	N/A	R-02	N/A	2023.05.06	2026.05.05	3 year
14	High Test Cable(1G-40GHz)	N/A	R-03	N/A	2023.06.17	2026.06.16	3 year
15	Filter	TRILTHIC	2400MHz	29	2024.04.26	2027.04.25	3 year
16	temporary antenna connector (Note)	NTS	R001	N/A	N/A	N/A	N/A

Note:
We will use the temporary antenna connector (soldered on the PCB board) When conducted test
And this temporary antenna connector is listed within the instrument list

AC Conduction Test equipment

Item	Kind of Equipment	Manufacturer	Type No.	Serial No.	Last calibration	Calibrated until	Calibration period
1	Test Receiver	R&S	ESCI	101160	2025.04.25	2026.04.24	1 year
2	LISN	R&S	ENV216	101313	2025.04.17	2026.04.16	1 year
3	LISN	SCHWARZBECK	NNLK 8129	8129245	2025.04.16	2026.04.15	1 year
4	50Ω Coaxial Switch	ANRITSU CORP	MP59B	6200983704	2024.04.26	2027.04.25	3 year
5	Test Cable (9KHz-30MHz)	N/A	C01	N/A	2023.05.06	2026.05.05	3 year
6	Test Cable (9KHz-30MHz)	N/A	C02	N/A	2023.05.06	2026.05.05	3 year
7	Test Cable (9KHz-30MHz)	N/A	C03	N/A	2023.05.06	2026.05.05	3 year

Note: Each piece of equipment is scheduled for calibration once a year except the Test Cable& Aux Equipment which is scheduled for calibration every 3 years.

Measurement Software

Item	Manufacturer	Software Name	Software Version	Description
1	MWRFtest	MTS 8310 2.4GHz/5GHz	2.0	RF Conducted Test
2	Farad	EZ-EMC_RE	AIT-03A	RadiatedTest
3	raditeq	RadiMation	2023.1.3	RadiatedTest
4	Farad	EZ-EMC_CE	AIT-03A	AC Conducted Test

3. EMC EMISSION TEST

3.1 **CONDUCTED EMISSION MEASUREMENT**

3.1.1 APPLICABLE STANDARD

According to FCC Part 15.207(a)

3.1.2 CONFORMANCE LIMIT

Frequency(MHz)	Conducted Emission Limit	
	Quasi-peak	Average
0.15-0.5	66-56*	56-46*
0.5-5.0	56	46
5.0-30.0	60	50

Note: 1. *Decreases with the logarithm of the frequency
2. The lower limit shall apply at the transition frequencies
3. The limit decreases in line with the logarithm of the frequency in the range of 0.15 to 0.50MHz.

3.1.3 TEST CONFIGURATION

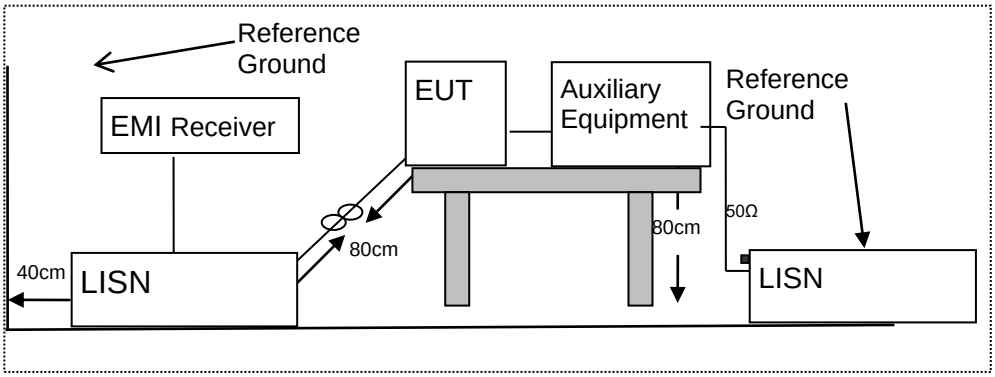

3.1.4 TEST PROCEDURE

According to the requirements in Section 13.1.4.1 of ANSI C63.10-2020 Conducted emissions the EUT measured in the frequency range between 0.15 MHz and 30 MHz using CISPR Quasi-Peak and average detector mode.

1. The EUT was placed 0.4 meter from the conducting wall of the shielding room.
2. The EUT was placed on a table which is 0.8m above ground plane.
3. Connect EUT to the power mains through a line impedance stabilization network (LISN). All other support equipments powered from additional LISN(s). The LISN provide 50 Ohm/ 50uH of coupling impedance for the measuring instrument.
4. Interconnecting cables that hang closer than 40 cm to the ground plane shall be folded back and forth in the center forming a bundle 30 to 40cm long.
5. I/O cables that are not connected to a peripheral shall be bundled in the center. The end of the cable may be terminated, if required, using the correct terminating impedance. The overall length shall not exceed 1 m.
6. LISN at least 80 cm from nearest part of EUT chassis.
7. The frequency range from 150KHz to 30MHz was searched.
8. Set the test-receiver system to Peak Detect Function and specified bandwidth(IF bandwidth=9KHz) with Maximum Hold Mode
9. For the actual test configuration, please refer to the related Item –EUT Test Photos.

3.1.5 TEST RESULTS

EUT：	LCD Smart Projector	Model Name. ：	XMM3106
Temperature：	27.4℃	Relative Humidity：	46.7%
Pressure：	1010hPa	Phase：	L
Test Voltage ：	DC 19V from Adapter AC 120V/60Hz	Test Mode：	Mode 1(5.2G)

Frequency (MHz)	Reading Level (dBμV)	Correct Factor (dB)	Measure-ment (dBμV)	Limits (dBμV)	Margin (dB)	Remark
0.1500	23.91	19.48	43.39	66.00	-22.61	QP
0.1500	9.05	19.48	28.53	56.00	-27.47	AVG
0.5820	23.13	19.50	42.63	56.00	-13.37	QP
0.5820	8.06	19.50	27.56	46.00	-18.44	AVG
0.7780	22.98	19.52	42.50	56.00	-13.50	QP
0.7780	10.04	19.52	29.56	46.00	-16.44	AVG
2.3220	22.29	19.54	41.83	56.00	-14.17	QP
2.3220	6.13	19.54	25.67	46.00	-20.33	AVG
4.4740	19.93	19.56	39.49	56.00	-16.51	QP
4.4740	7.28	19.56	26.84	46.00	-19.16	AVG
6.0220	19.85	19.59	39.44	60.00	-20.56	QP
6.0220	7.22	19.59	26.81	50.00	-23.19	AVG

Remark:
1. All readings are Quasi-Peak and Average values.
2. Factor = Insertion Loss + Cable Loss.

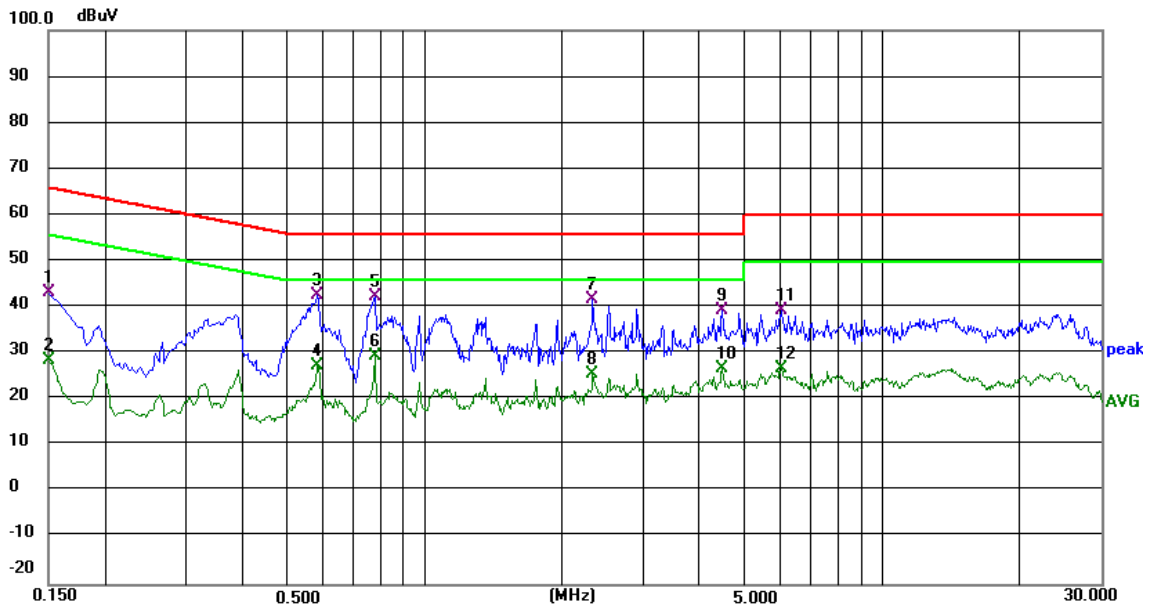

EUT：	LCD Smart Projector	Model Name. ：	XMM3106
Temperature：	27.4℃	Relative Humidity：	46.7%
Pressure：	1010hPa	Phase：	N
Test Voltage ：	DC 19V from Adapter AC 120V/60Hz	Test Mode：	Mode 1(5.2G)

Frequency (MHz)	Reading Level (dBμV)	Correct Factor (dB)	Measure-ment (dBμV)	Limits (dBμV)	Margin (dB)	Remark
0.1500	23.31	19.48	42.79	66.00	-23.21	QP
0.1500	9.66	19.48	29.14	56.00	-26.86	AVG
0.5780	23.19	19.50	42.69	56.00	-13.31	QP
0.5780	11.78	19.50	31.28	46.00	-14.72	AVG
0.7700	23.04	19.52	42.56	56.00	-13.44	QP
0.7700	11.55	19.52	31.07	46.00	-14.93	AVG
2.3100	22.24	19.54	41.78	56.00	-14.22	QP
2.3100	6.26	19.54	25.80	46.00	-20.20	AVG
2.8940	20.86	19.56	40.42	56.00	-15.58	QP
2.8940	6.43	19.56	25.99	46.00	-20.01	AVG
14.0460	19.47	19.87	39.34	60.00	-20.66	QP
14.0460	6.80	19.87	26.67	50.00	-23.33	AVG

Remark:
1. All readings are Quasi-Peak and Average values.
2. Factor = Insertion Loss + Cable Loss.

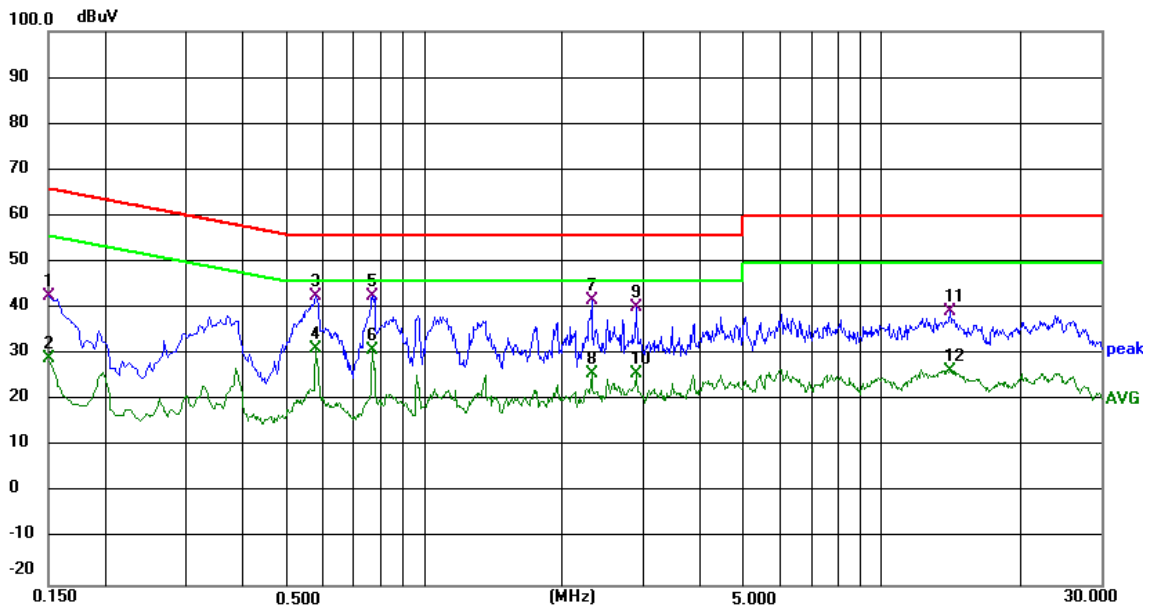

EUT：	LCD Smart Projector	Model Name. ：	XMM3106
Temperature：	27.4℃	Relative Humidity：	46.7%
Pressure：	1010hPa	Phase：	L
Test Voltage ：	DC 19V from Adapter AC 120V/60Hz	Test Mode：	Mode 1(5.3G)

Frequency (MHz)	Reading Level (dBμV)	Correct Factor (dB)	Measure-ment (dBμV)	Limits (dBμV)	Margin (dB)	Remark
0.1500	23.91	19.48	43.39	66.00	-22.61	QP
0.1500	9.05	19.48	28.53	56.00	-27.47	AVG
0.5820	23.13	19.50	42.63	56.00	-13.37	QP
0.5820	8.06	19.50	27.56	46.00	-18.44	AVG
0.7780	22.98	19.52	42.50	56.00	-13.50	QP
0.7780	10.04	19.52	29.56	46.00	-16.44	AVG
2.3220	22.29	19.54	41.83	56.00	-14.17	QP
2.3220	6.13	19.54	25.67	46.00	-20.33	AVG
4.4740	19.93	19.56	39.49	56.00	-16.51	QP
4.4740	7.28	19.56	26.84	46.00	-19.16	AVG
6.0220	19.85	19.59	39.44	60.00	-20.56	QP
6.0220	7.22	19.59	26.81	50.00	-23.19	AVG

Remark:
1. All readings are Quasi-Peak and Average values.
2. Factor = Insertion Loss + Cable Loss.

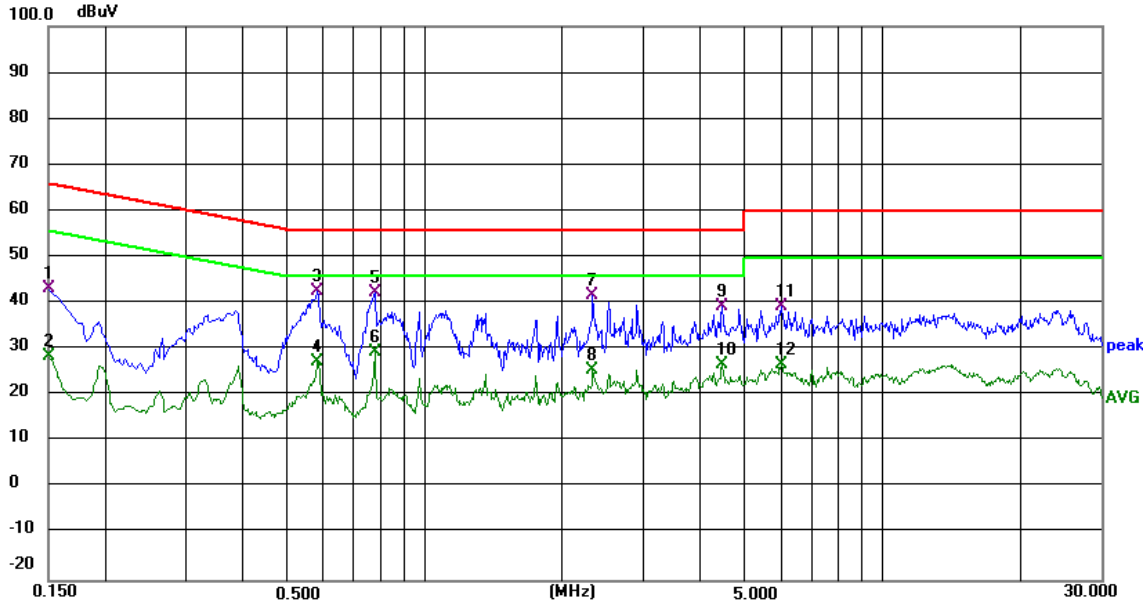

EUT：	LCD Smart Projector	Model Name. ：	XMM3106
Temperature：	27.4℃	Relative Humidity：	46.7%
Pressure：	1010hPa	Phase：	N
Test Voltage ：	DC 19V from Adapter AC 120V/60Hz	Test Mode：	Mode 1(5.3G)

Frequency (MHz)	Reading Level (dBμV)	Correct Factor (dB)	Measure-ment (dBμV)	Limits (dBμV)	Margin (dB)	Remark
0.1500	23.31	19.44	42.75	66.00	-23.25	QP
0.1500	9.66	19.44	29.10	56.00	-26.90	AVG
0.5780	23.19	19.53	42.72	56.00	-13.28	QP
0.5780	11.78	19.53	31.31	46.00	-14.69	AVG
0.7700	23.04	19.57	42.61	56.00	-13.39	QP
0.7700	11.55	19.57	31.12	46.00	-14.88	AVG
2.3100	22.24	19.53	41.77	56.00	-14.23	QP
2.3100	6.26	19.53	25.79	46.00	-20.21	AVG
2.8940	20.86	19.61	40.47	56.00	-15.53	QP
2.8940	6.43	19.61	26.04	46.00	-19.96	AVG
14.0460	19.47	19.90	39.37	60.00	-20.63	QP
14.0460	6.80	19.90	26.70	50.00	-23.30	AVG

Remark:
1. All readings are Quasi-Peak and Average values.
2. Factor = Insertion Loss + Cable Loss.

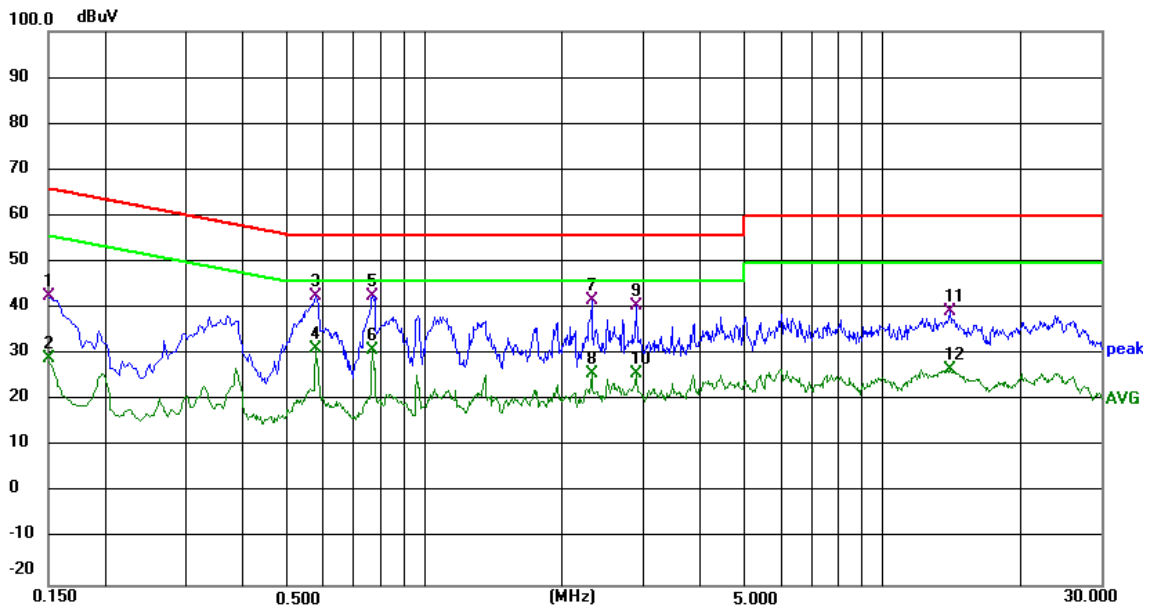

EUT：	LCD Smart Projector	Model Name. ：	XMM3106
Temperature：	27.4℃	Relative Humidity：	46.7%
Pressure：	1010hPa	Phase：	L
Test Voltage ：	DC 19V from Adapter AC 120V/60Hz	Test Mode：	Mode 1(5.6G)

Frequency (MHz)	Reading Level (dBμV)	Correct Factor (dB)	Measure-ment (dBμV)	Limits (dBμV)	Margin (dB)	Remark
0.1500	24.16	19.44	43.60	66.00	-22.40	QP
0.1500	2.18	19.44	21.62	56.00	-34.38	AVG
0.3980	20.82	19.52	40.34	57.90	-17.56	QP
0.3980	7.19	19.52	26.71	47.90	-21.19	AVG
0.6220	23.82	19.55	43.37	56.00	-12.63	QP
0.6220	12.43	19.55	31.98	46.00	-14.02	AVG
0.8300	22.82	19.56	42.38	56.00	-13.62	QP
0.8300	11.99	19.56	31.55	46.00	-14.45	AVG
2.4900	21.26	19.55	40.81	56.00	-15.19	QP
2.4900	5.23	19.55	24.78	46.00	-21.22	AVG
9.9620	18.11	19.63	37.74	60.00	-22.26	QP
9.9620	5.15	19.63	24.78	50.00	-25.22	AVG

Remark:
1. All readings are Quasi-Peak and Average values.
2. Factor = Insertion Loss + Cable Loss.

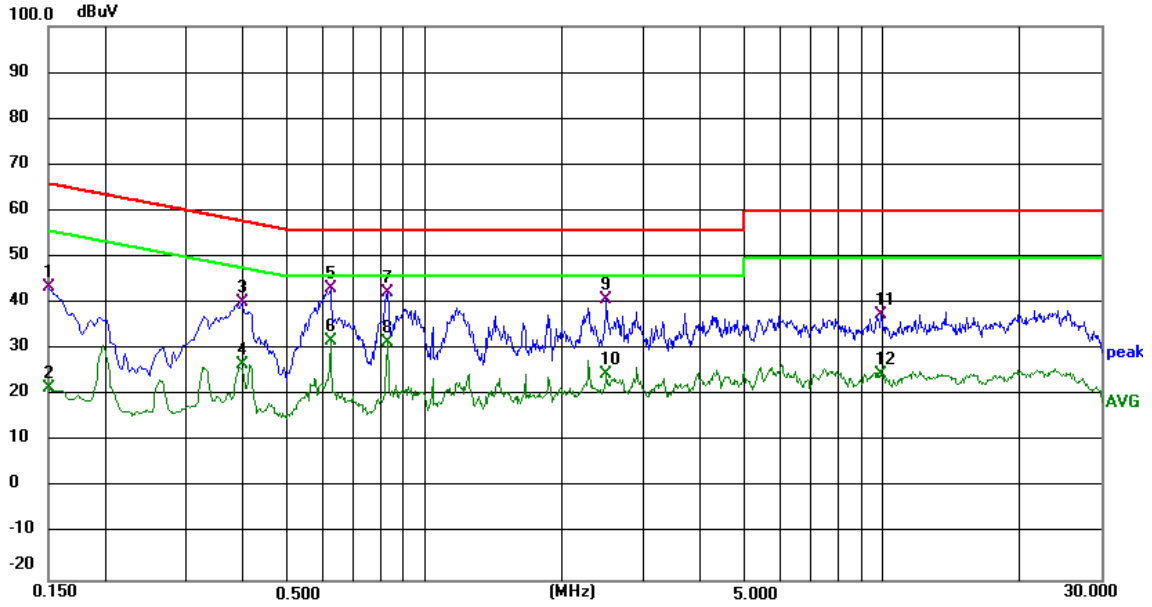

EUT：	LCD Smart Projector	Model Name. ：	XMM3106
Temperature：	27.4℃	Relative Humidity：	46.7%
Pressure：	1010hPa	Phase：	N
Test Voltage ：	DC 19V from Adapter AC 120V/60Hz	Test Mode：	Mode 1(5.6G)

Frequency (MHz)	Reading Level (dBμV)	Correct Factor (dB)	Measure-ment (dBμV)	Limits (dBμV)	Margin (dB)	Remark
0.1500	23.94	19.44	43.38	66.00	-22.62	QP
0.1500	3.04	19.44	22.48	56.00	-33.52	AVG
0.3980	20.84	19.52	40.36	57.90	-17.54	QP
0.3980	6.93	19.52	26.45	47.90	-21.45	AVG
0.6220	23.35	19.55	42.90	56.00	-13.10	QP
0.6220	10.68	19.55	30.23	46.00	-15.77	AVG
0.8300	23.14	19.56	42.70	56.00	-13.30	QP
0.8300	7.95	19.56	27.51	46.00	-18.49	AVG
2.2860	21.90	19.52	41.42	56.00	-14.58	QP
2.2860	7.46	19.52	26.98	46.00	-19.02	AVG
5.9580	19.14	19.59	38.73	60.00	-21.27	QP
5.9580	7.56	19.59	27.15	50.00	-22.85	AVG

Remark:
1. All readings are Quasi-Peak and Average values.
2. Factor = Insertion Loss + Cable Loss.

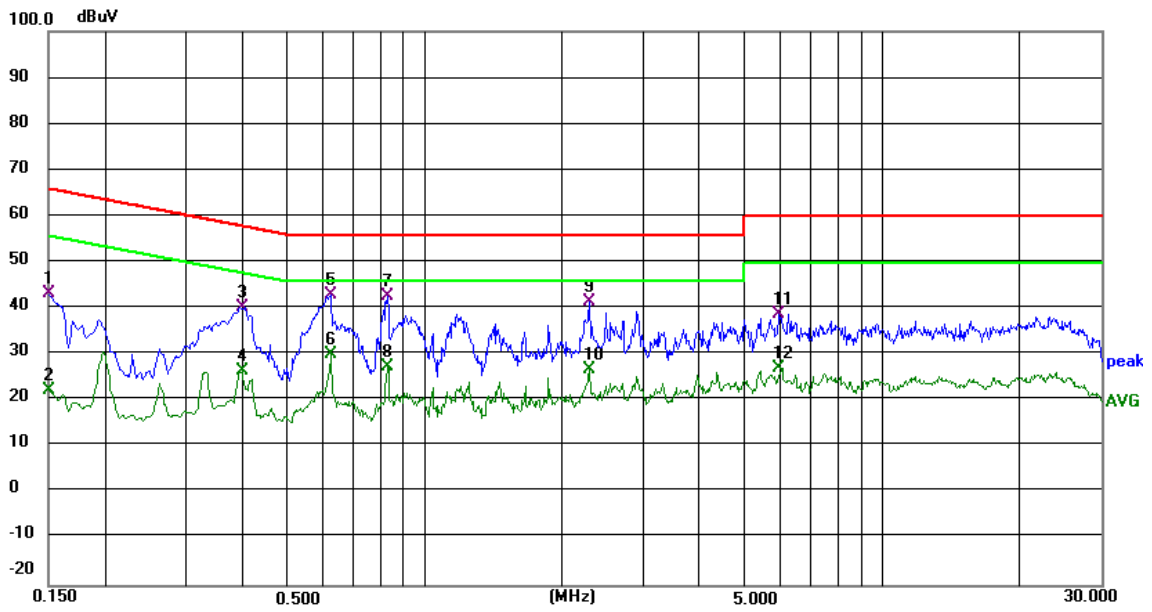

EUT：	LCD Smart Projector	Model Name. ：	XMM3106
Temperature：	27.4℃	Relative Humidity：	46.7%
Pressure：	1010hPa	Phase：	L
Test Voltage ：	DC 19V from Adapter AC 120V/60Hz	Test Mode：	Mode 1(5.8G)

Frequency (MHz)	Reading Level (dBμV)	Correct Factor (dB)	Measure-ment (dBμV)	Limits (dBμV)	Margin (dB)	Remark
0.1500	24.99	19.44	44.43	66.00	-21.57	QP
0.1500	4.76	19.44	24.20	56.00	-31.80	AVG
0.4020	20.99	19.53	40.52	57.81	-17.29	QP
0.4020	8.10	19.53	27.63	47.81	-20.18	AVG
0.6300	24.13	19.55	43.68	56.00	-12.32	QP
0.6300	10.32	19.55	29.87	46.00	-16.13	AVG
0.8420	22.93	19.56	42.49	56.00	-13.51	QP
0.8420	7.08	19.56	26.64	46.00	-19.36	AVG
2.3140	19.70	19.53	39.23	56.00	-16.77	QP
2.3140	6.23	19.53	25.76	46.00	-20.24	AVG
5.8859	18.40	19.59	37.99	60.00	-22.01	QP
5.8859	6.71	19.59	26.30	50.00	-23.70	AVG

Remark:
1. All readings are Quasi-Peak and Average values.
2. Factor = Insertion Loss + Cable Loss.

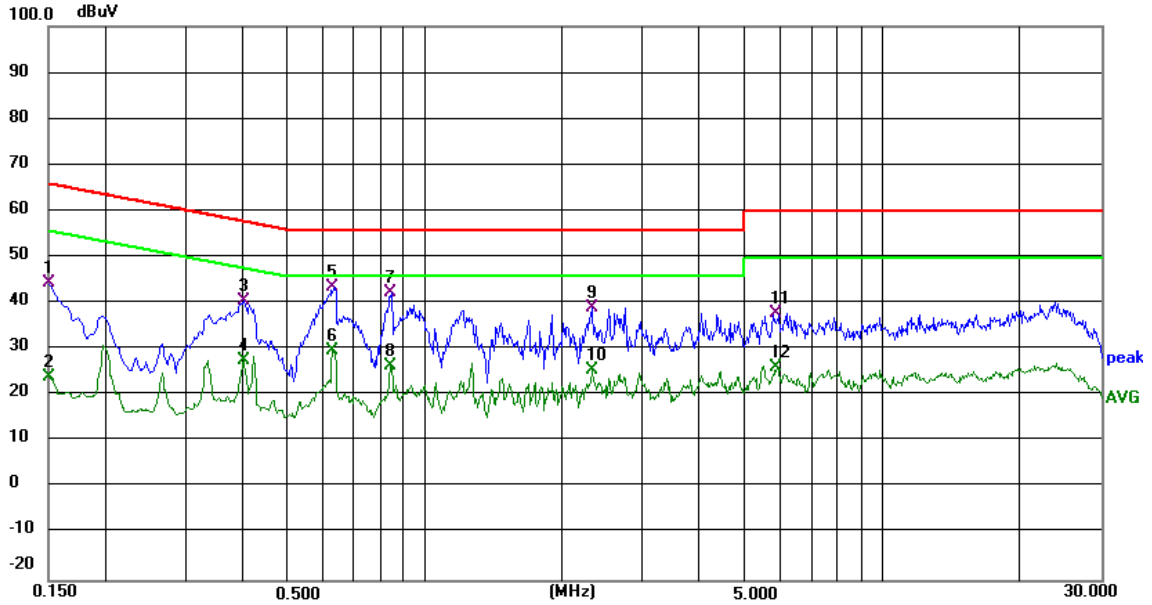

EUT：	LCD Smart Projector	Model Name. ：	XMM3106
Temperature：	27.4℃	Relative Humidity：	46.7%
Pressure：	1010hPa	Phase：	N
Test Voltage ：	DC 19V from Adapter AC 120V/60Hz	Test Mode：	Mode 1(5.8G)

Frequency (MHz)	Reading Level (dBμV)	Correct Factor (dB)	Measure-ment (dBμV)	Limits (dBμV)	Margin (dB)	Remark
0.1500	24.20	19.44	43.64	66.00	-22.36	QP
0.1500	4.41	19.44	23.85	56.00	-32.15	AVG
0.4020	21.04	19.53	40.57	57.81	-17.24	QP
0.4020	8.04	19.53	27.57	47.81	-20.24	AVG
0.6340	23.97	19.55	43.52	56.00	-12.48	QP
0.6340	10.04	19.55	29.59	46.00	-16.41	AVG
0.8420	22.99	19.56	42.55	56.00	-13.45	QP
0.8420	10.06	19.56	29.62	46.00	-16.38	AVG
1.2020	19.65	19.51	39.16	56.00	-16.84	QP
1.2020	4.12	19.51	23.63	46.00	-22.37	AVG
2.3179	21.15	19.53	40.68	56.00	-15.32	QP
2.3179	6.69	19.53	26.22	46.00	-19.78	AVG

Remark:
1. All readings are Quasi-Peak and Average values.
2. Factor = Insertion Loss + Cable Loss.

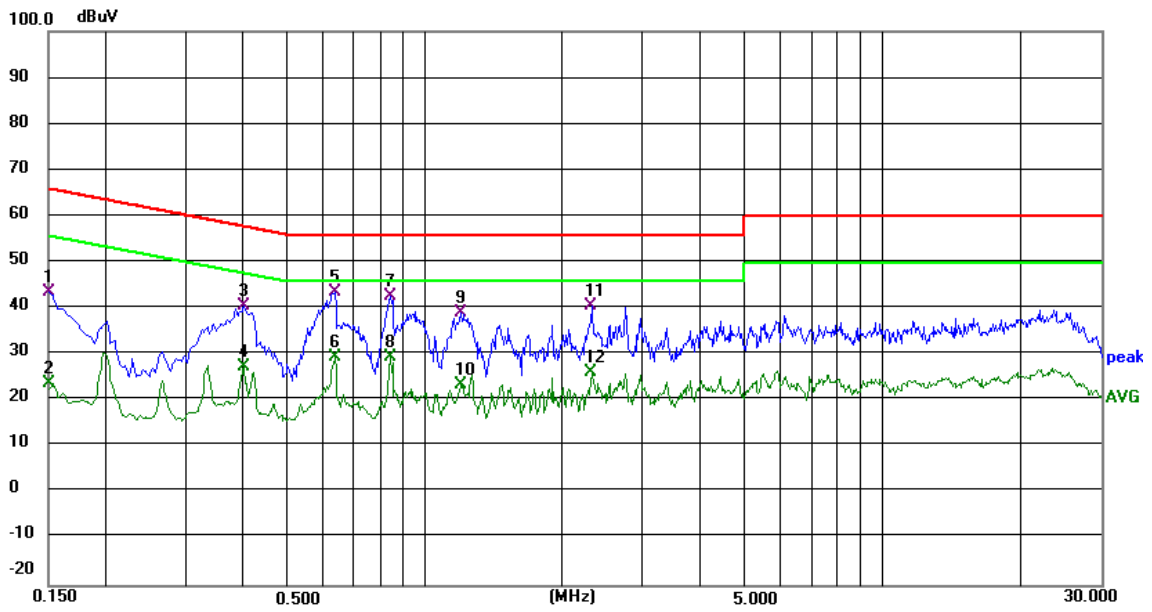

3.2 RADIATED EMISSION MEASUREMENT

3.2.1 APPLICABLE STANDARD

According to FCC Part 15.407(d) and 15.209

3.2.2 CONFORMANCE LIMIT

According to FCC Part 15.407(b)(7): radiated emissions which fall in the restricted bands, as defined in §15.205(a), must also comply with the radiated emission limits specified in §15.209(a) (see §15.205(c)).
According to FCC Part15.205, Restricted bands

MHz	MHz	MHz	GHz
0.090-0.110	16.42-16.423	399.9-410	4.5-5.15
0.495-0.505	16.69475-16.69525	608-614	5.35-5.46
2.1735-2.1905	16.80425-16.80475	960-1240	7.25-7.75
4.125-4.128	25.5-25.67	1300-1427	8.025-8.5
4.17725-4.17775	37.5-38.25	1435-1626.5	9.0-9.2
4.20725-4.20775	73-74.6	1645.5-1646.5	9.3-9.5
6.215-6.218	74.8-75.2	1660-1710	10.6-12.7
6.26775-6.26825	123-138	2200-2300	14.47-14.5
8.291-8.294	149.9-150.05	2310-2390	15.35-16.2
8.362-8.366	156.52475-156.52525	2483.5-2500	17.7-21.4
8.37625-8.38675	156.7-156.9	2690-2900	22.01-23.12
8.41425-8.41475	162.0125-167.17	3260-3267	23.6-24.0
12.29-12.293	167.72-173.2	3332-3339	31.2-31.8
12.51975-12.52025	240-285	3345.8-3358	36.43-36.5
12.57675-12.57725	322-335.4	3600-4400	(2)
13.36-13.41			

In case the emission fall within the restricted band specified on 15.205(a), then the 15.209(a) limit in the table below has to be followed.

Restricted Frequency(MHz)	Field Strength (μV/m)	Field Strength (dBμV/m)	Measurement Distance
0.009~0.490	2400/F(KHz)	20 log (uV/m)	300
0.490~1.705	24000/F(KHz)	20 log (uV/m)	30
1.705~30.0	30	29.5	30
30-88	100	40	3
88-216	150	43.5	3
216-960	200	46	3
Above 960	500	54	3

Limits of Radiated Emission Measurement(Above 1000MHz)

Frequency(MHz)	Class B (dBuV/m) (at 3M)	
	PEAK	AVERAGE
Above 1000	74	54

Remark :1. Emission level in dBuV/m=20 log (uV/m)
2. Measurement was performed at an antenna to the closed point of EUT distance of meters.
3. For Frequency 9kHz~30MHz:
Distance extrapolation factor =40log(Specific distance/ test distance)(dB);
Limit line=Specific limits(dBuV) + distance extrapolation factor.
For Frequency above 30MHz:
Distance extrapolation factor =20log(Specific distance/ test distance)(dB);
Limit line=Specific limits(dBuV) + distance extrapolation factor.

3.2.3 MEASURING INSTRUMENTS

The Measuring equipment is listed in the section 6.3 of this test report.

3.2.4 TEST CONFIGURATION

(a) For radiated emissions below 30MHz

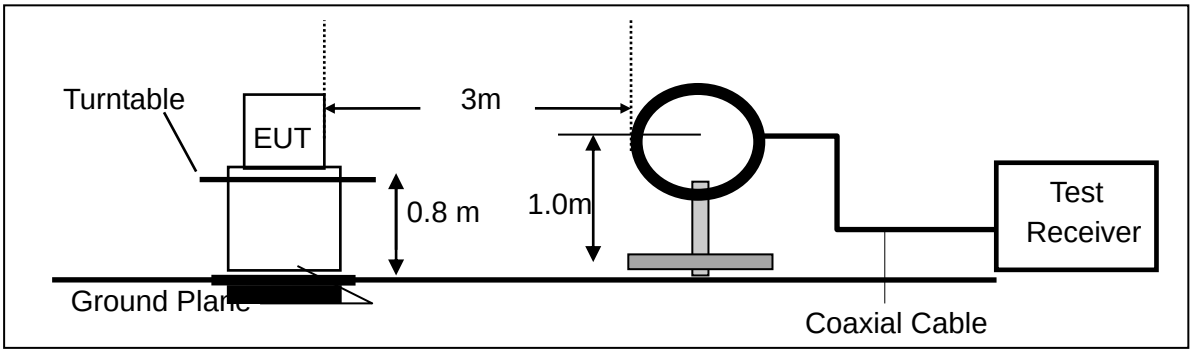

(b) For radiated emissions from 30MHz to 1000MHz

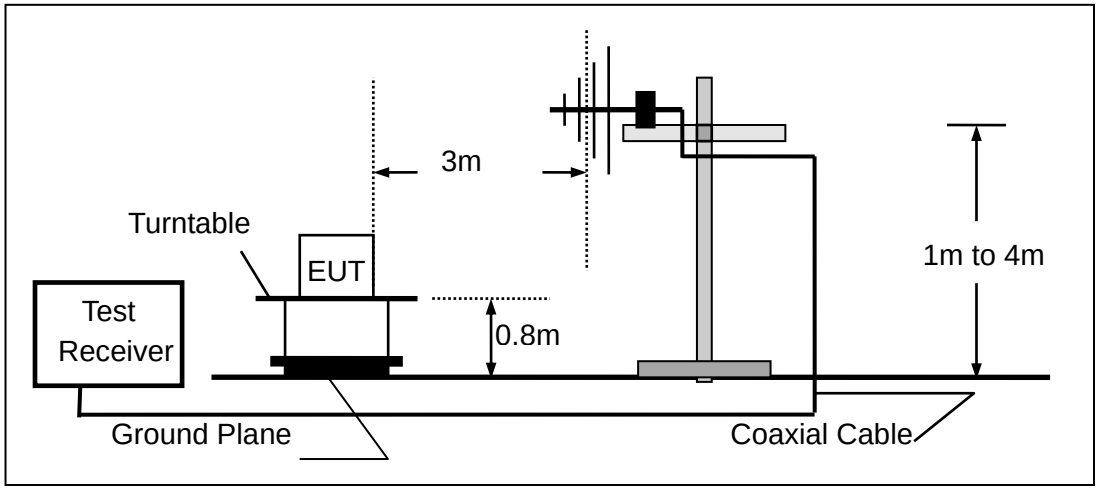

(c) For radiated emissions above 1000MHz

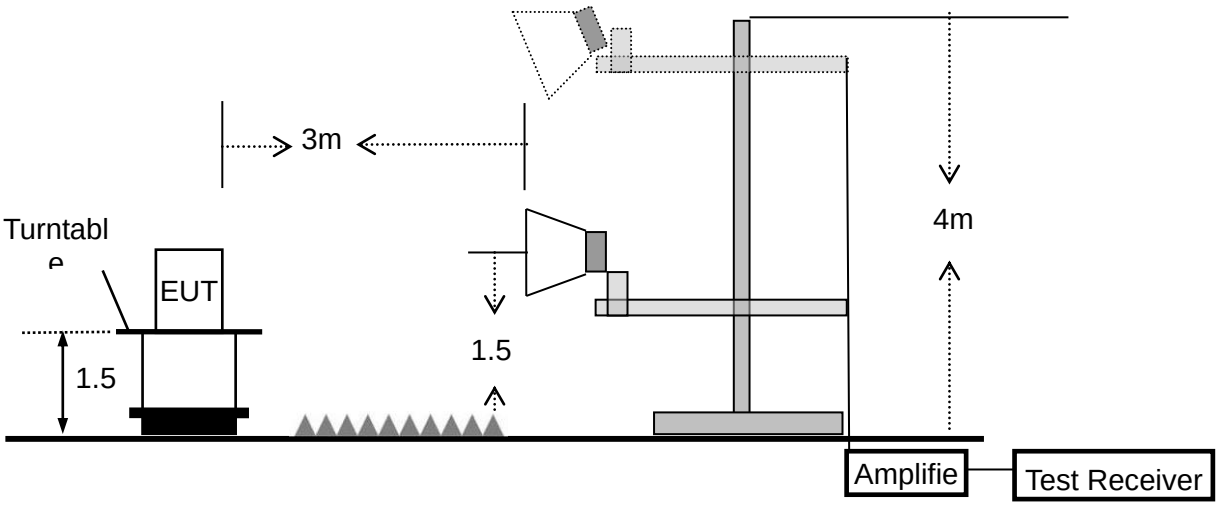

3.2.5 TEST PROCEDURE

The test site semi-anechoic chamber has met the requirement of NSA tolerance 4 dB according to the standards: ANSI C63.10-2020. The test distance is 3m.The setup is according to the requirements in Section 13.1.4.1 of ANSI C63.10-2020 and CAN/CSA-CEI/IEC CISPR 22.
This test is required for any spurious emission that falls in a Restricted Band, as defined in Section 15.205.
It must be performed with the highest gain of each type of antenna proposed for use with the EUT.
Use the following spectrum analyzer settings:

Spectrum Parameter	Setting
Attenuation	Auto
Start Frequency	1000 MHz
Stop Frequency	10th carrier harmonic
RB / VB (emission in restricted band)	1 MHz / 1 MHz for Peak, 1 MHz / 10Hz for Average

Receiver Parameter	Setting
Attenuation	Auto
Start ~ Stop Frequency	9kHz~150kHz / RB 200Hz for QP
Start ~ Stop Frequency	150kHz~30MHz / RB 9kHz for QP
Start ~ Stop Frequency	30MHz~1000MHz / RB 120kHz for QP

a. The measuring distance of at 3 m shall be used for measurements at frequency up to 1GHz. For frequencies above 1GHz, any suitable measuring distance may be used.
b. The EUT was placed on the top of a rotating table 0.8 m for below 1GHz and 1.5m for above 1GHz the ground at a 3 meter. The table was rotated 360 degrees to determine the position of the highest radiation.
c. The height of the equipment or of the substitution antenna shall be 0.8 m for below 1GHz and 1.5m for above 1GHz; the height of the test antenna shall vary between 1 m to 4 m. Both horizontal and vertical polarizations of the antenna are set to make the measurement.
d. The initial step in collecting conducted emission data is a spectrum analyzer peak detector mode pre-scanning the measurement frequency range. Significant peaks are then marked and then Quasi Peak detector mode re-measured.
e. If the Peak Mode measured value compliance with and lower than Quasi Peak Mode Limit, the EUT shall be deemed to meet QP Limits and then no additional QP Mode measurement performed.
f. For the actual test configuration, please refer to the related Item –EUT Test Photos.

Note:

Both horizontal and vertical antenna polarities were tested
and performed pretest to three orthogonal axis. The worst case emissions were reported

During the radiated emission test, the Spectrum Analyzer was set with the following configurations:

Frequency Band (MHz)	Function	Resolution bandwidth	Video Bandwidth
30 to 1000	QP	120 kHz	300 kHz
Above 1000	Peak	1 MHz	1 MHz
	Average	1 MHz	10 Hz

Note: for the frequency ranges below 30 MHz, a narrower RBW is used for these ranges but the measured value should add a RBW correction factor (RBWCF) where RBWCF [dB] =10*lg(100 [kHz]/narrower RBW [kHz]). , the narrower RBW is 1 kHz and RBWCF is 20 dB for the frequency 9 kHz to 150 kHz, and the narrower RBW is 10 kHz and RBWCF is 10 dB for the frequency 150 kHz to 30 MHz.

3.2.6 TEST RESULTS (9KHZ – 30 MHZ)

EUT：	LCD Smart Projector	Model Name ：	XMM3106
Temperature：	26 ℃	Relative Humidity：	54%
Pressure：	1010 hPa	Test Voltage ：	DC 19V
Test Mode ：	TX	Polarization :	--

Freq.	Reading	Limit	Margin	State
(MHz)	(dBuV/m)	(dBuV/m)	(dB)	P/F
--	--	--	--	N/A
--	--	--	--	N/A

NOTE:

The amplitude of spurious emissions which are attenuated by more than 20dB below the permissible value has no need to be reported.

3.2.7 TEST RESULTS (30MHZ – 1GHZ)

EUT :	LCD Smart Projector	Model Name :	XMM3106
Temperature :	25.6℃	Relative Humidity :	54%
Pressure :	1010 hPa	Test Voltage :	DC 19V
Test Mode :	TX(5.2G WIFI)		

Polar (H/V)	Frequency (MHz)	Meter Reading (dBuV)	Factor (dB)	Emission Level (dBuV/m)	Limits (dBuV/m)	Margin (dB)	Remark
V	36.8950	12.85	17.52	30.37	40.00	-9.63	QP
V	53.8820	11.17	19.40	30.57	40.00	-9.43	QP
V	148.4410	12.51	14.39	26.90	43.50	-16.60	QP
V	201.3930	10.95	17.62	28.57	43.50	-14.93	QP
V	287.9900	11.89	19.73	31.62	46.00	-14.38	QP
V	446.4140	11.36	22.87	34.23	46.00	-11.77	QP

Remark:

Emission Level= ReadingLevel+ Factor, Margin= Emission Level - Limit

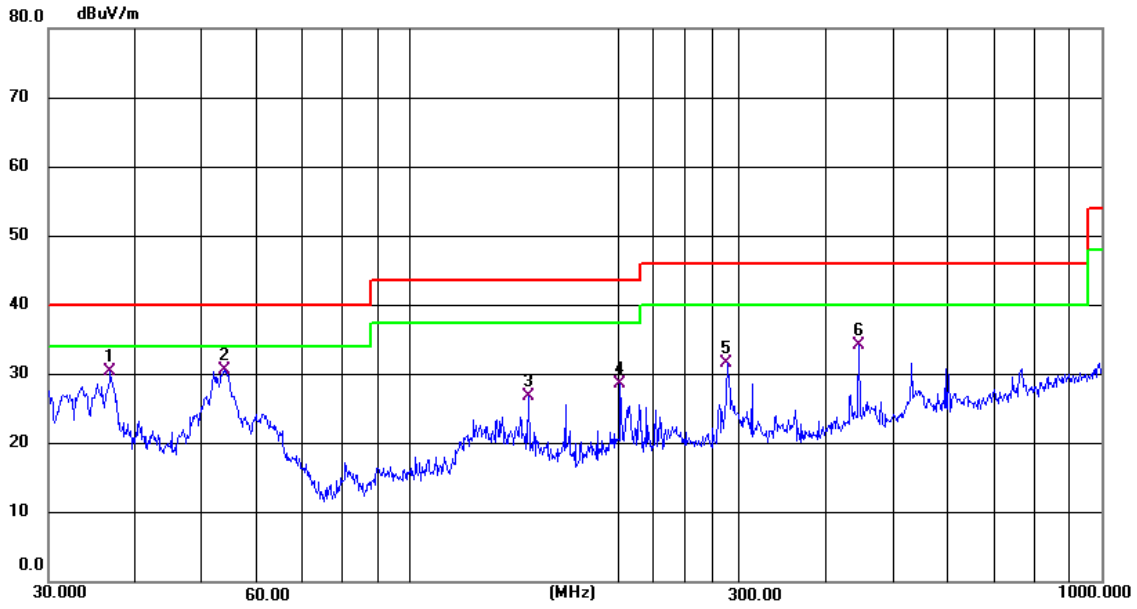

Polar (H/V)	Frequency (MHz)	Meter Reading (dBuV)	Factor (dB)	Emission Level (dBuV/m)	Limits (dBuV/m)	Margin (dB)	Remark
H	81.7830	7.99	14.15	22.14	40.00	-17.86	QP
H	201.3930	12.08	17.62	29.70	43.50	-13.80	QP
H	226.8940	11.62	18.51	30.13	46.00	-15.87	QP
H	287.9900	9.10	19.73	28.83	46.00	-17.17	QP
H	482.2160	7.24	23.62	30.86	46.00	-15.14	QP
H	595.1330	3.89	25.59	29.48	46.00	-16.52	QP

Remark:

Emission Level= ReadingLevel+ Factor, Margin= Emission Level - Limit

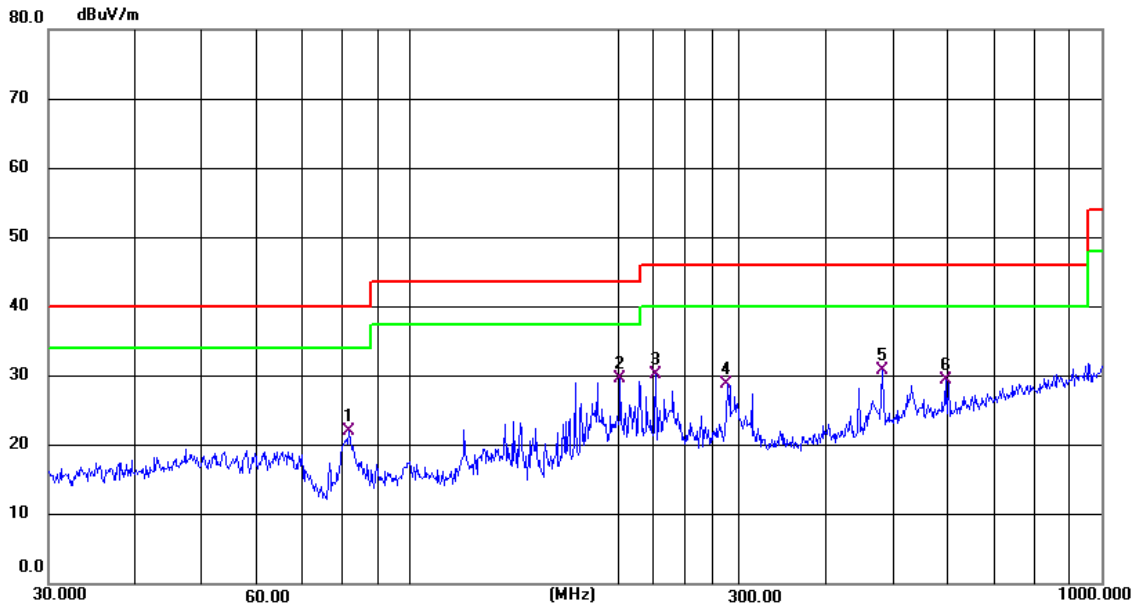

EUT：	LCD Smart Projector	Model Name ：	XMM3106
Temperature：	25.6℃	Relative Humidity：	54%
Pressure：	1010 hPa	Test Voltage ：	DC 19V
Test Mode ：	TX(5.3G WIFI)		

Polar (H/V)	Frequency (MHz)	Meter Reading (dBuV)	Factor (dB)	Emission Level (dBuV/m)	Limits (dBuV/m)	Margin (dB)	Remark
V	33.4450	9.31	17.20	26.51	40.00	-13.49	QP
V	53.8820	10.28	19.40	29.68	40.00	-10.32	QP
V	125.8860	8.18	15.45	23.63	43.50	-19.87	QP
V	201.3930	9.61	17.62	27.23	43.50	-16.27	QP
V	287.9900	10.88	19.73	30.61	46.00	-15.39	QP
V	601.4270	5.34	25.44	30.78	46.00	-15.22	QP

Remark:

Emission Level= ReadingLevel+ Factor, Margin= Emission Level - Limit

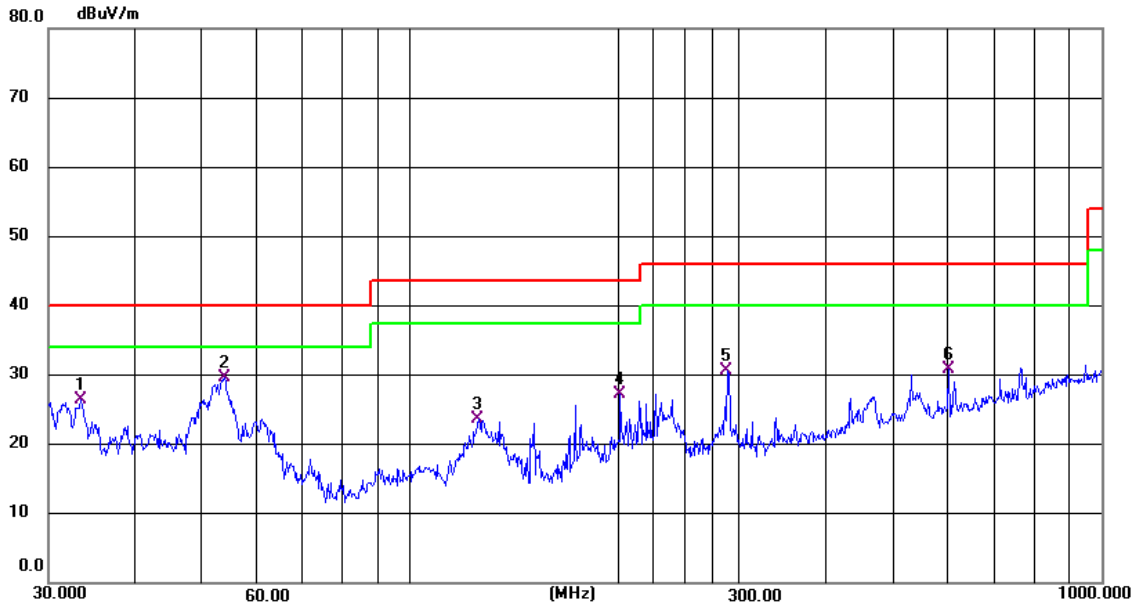

Polar (H/V)	Frequency (MHz)	Meter Reading (dBuV)	Factor (dB)	Emission Level (dBuV/m)	Limits (dBuV/m)	Margin (dB)	Remark
H	59.4410	0.22	18.92	19.14	40.00	-20.86	QP
H	79.5210	3.01	13.94	16.95	40.00	-23.05	QP
H	144.3350	8.53	14.66	23.19	43.50	-20.31	QP
H	173.2050	15.48	15.34	30.82	43.50	-12.68	QP
H	226.8940	12.12	18.51	30.63	46.00	-15.37	QP
H	601.4270	3.85	25.44	29.29	46.00	-16.71	QP

Remark:

Emission Level= ReadingLevel+ Factor, Margin= Emission Level - Limit

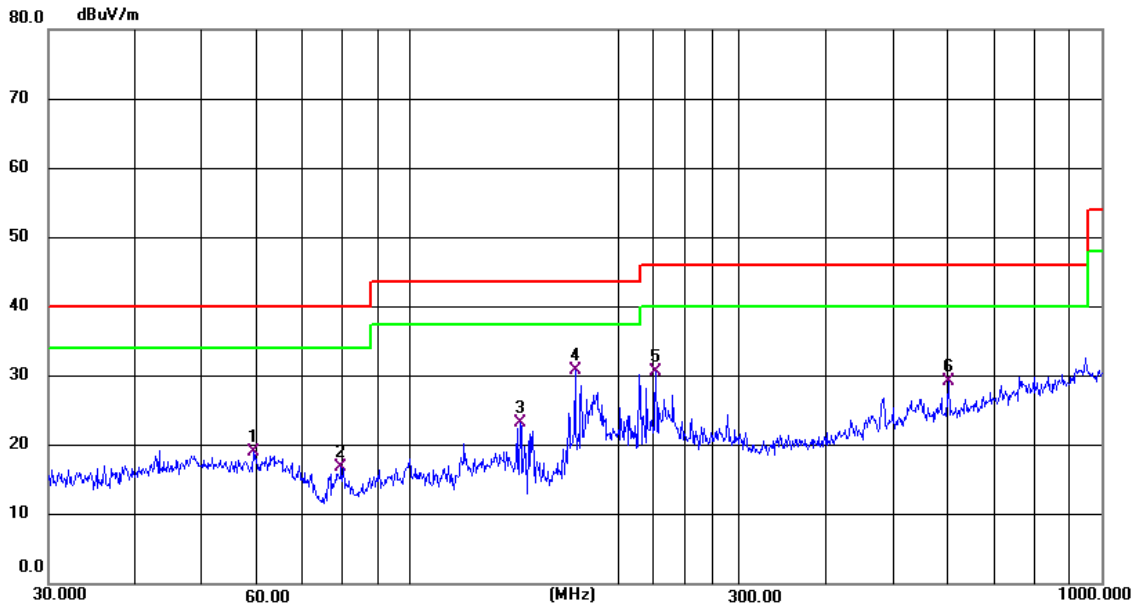

EUT：	LCD Smart Projector	Model Name ：	XMM3106
Temperature：	25.6℃	Relative Humidity：	54%
Pressure：	1010 hPa	Test Voltage ：	DC 19V
Test Mode ：	TX(5.6G WIFI)		

Polar (H/V)	Frequency (MHz)	Meter Reading (dBuV)	Factor (dB)	Emission Level (dBuV/m)	Limits (dBuV/m)	Margin (dB)	Remark
V	31.6200	10.64	16.92	27.56	40.00	-12.44	QP
V	53.6930	10.65	19.44	30.09	40.00	-9.91	QP
V	120.6990	8.03	16.02	24.05	43.50	-19.45	QP
V	226.8940	10.72	18.51	29.23	46.00	-16.77	QP
V	290.0169	10.99	19.94	30.93	46.00	-15.07	QP
V	601.4270	5.28	25.44	30.72	46.00	-15.28	QP

Remark:

Emission Level= ReadingLevel+ Factor, Margin= Emission Level - Limit

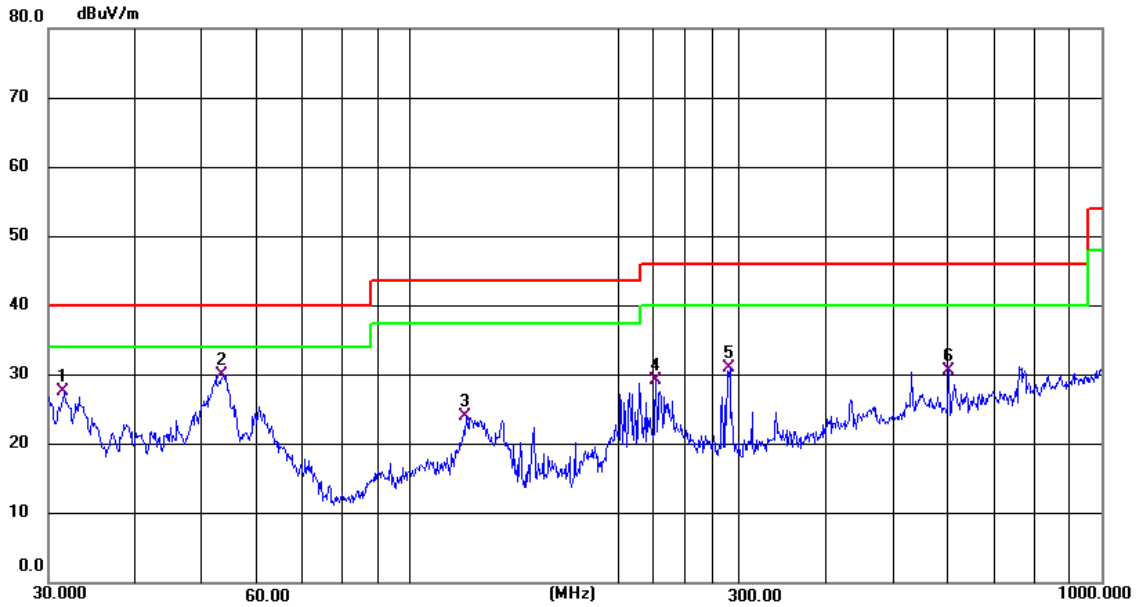

Polar (H/V)	Frequency (MHz)	Meter Reading (dBuV)	Factor (dB)	Emission Level (dBuV/m)	Limits (dBuV/m)	Margin (dB)	Remark
H	98.8330	-0.08	17.54	17.46	43.50	-26.04	QP
H	144.8420	9.20	14.71	23.91	43.50	-19.59	QP
H	173.2050	13.06	15.34	28.40	43.50	-15.10	QP
H	226.8940	13.95	18.51	32.46	46.00	-13.54	QP
H	460.7270	2.82	23.36	26.18	46.00	-19.82	QP
H	545.1830	4.98	24.85	29.83	46.00	-16.17	QP

Remark:

Emission Level= ReadingLevel+ Factor, Margin= Emission Level - Limit

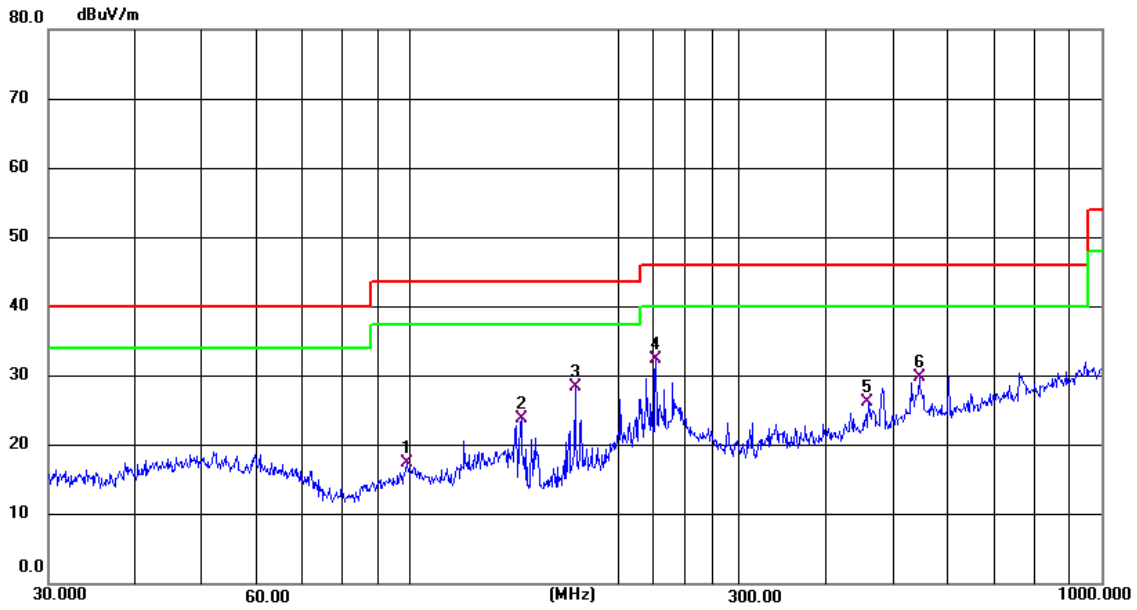

EUT：	LCD Smart Projector	Model Name ：	XMM3106
Temperature：	25.6℃	Relative Humidity：	54%
Pressure：	1010 hPa	Test Voltage ：	DC 19V
Test Mode ：	TX(5.8G WIFI)		

Polar (H/V)	Frequency (MHz)	Meter Reading (dBuV)	Factor (dB)	Emission Level (dBuV/m)	Limits (dBuV/m)	Margin (dB)	Remark
V	39.0240	6.16	18.65	24.81	40.00	-15.19	QP
V	54.4520	2.00	19.30	21.30	40.00	-18.70	QP
V	70.5840	11.93	15.66	27.59	40.00	-12.41	QP
V	173.2050	14.30	15.34	29.64	43.50	-13.86	QP
V	312.1790	5.08	20.45	25.53	46.00	-20.47	QP
V	774.1579	2.73	28.26	30.99	46.00	-15.01	QP

Remark:

Emission Level= ReadingLevel+ Factor, Margin= Emission Level - Limit

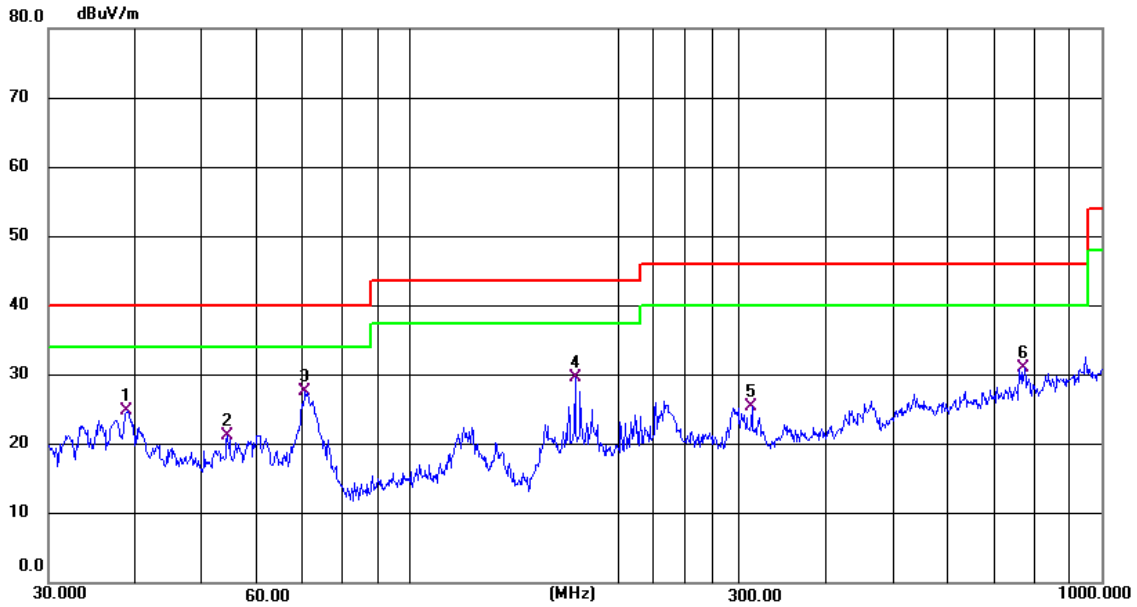

Polar (H/V)	Frequency (MHz)	Meter Reading (dBuV)	Factor (dB)	Emission Level (dBuV/m)	Limits (dBuV/m)	Margin (dB)	Remark
H	51.8430	-0.85	19.63	18.78	40.00	-21.22	QP
H	70.8320	5.58	15.56	21.14	40.00	-18.86	QP
H	133.6190	4.19	14.75	18.94	43.50	-24.56	QP
H	173.2050	17.18	15.34	32.52	43.50	-10.98	QP
H	226.0990	12.46	18.53	30.99	46.00	-15.01	QP
H	556.7740	2.00	25.00	27.00	46.00	-19.00	QP

Remark:

Emission Level= ReadingLevel+ Factor, Margin= Emission Level - Limit

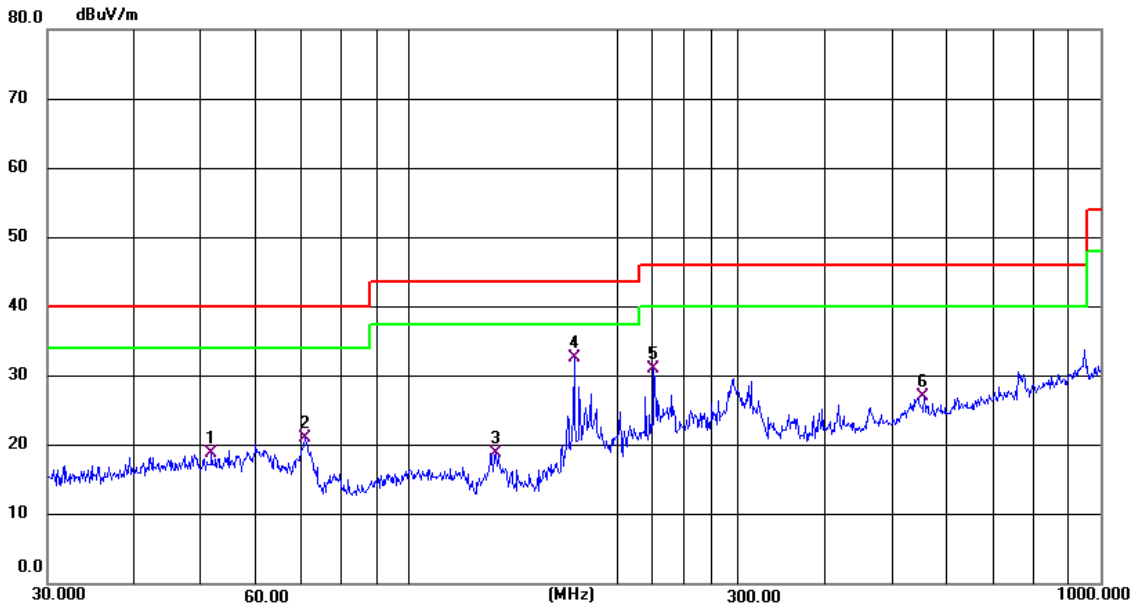

Note: All modes have been tested, just the worst mode has been recorded in the report.

3.2.8 TEST RESULTS (1GHz-18GHz)

EUT：	LCD Smart Projector	Model Name. ：	XMM3106
Temperature：	20 ℃	Relative Humidity：	48%
Pressure：	1010 hPa	Test Voltage ：	DC 19V
Test Mode ：	TX(5.2G) - 802.11n20-MIMO		

Polar	Frequency	Meter Reading	Cable loss	Antenna Factor	Preamp Factor	Emission Level	Limits	Margin	Detector Type
(H/V)	(MHz)	(dBuV)	(dB)	dB/m	(dB)	(dBuV/m)	(dBuV/m)	(dB)	
Low Channel (5180 MHz)-Above 1G									
Vertical	3015	58.33	5.94	35.40	44.00	55.67	68.2	-12.53	Pk
Vertical	10360	49.35	8.46	39.75	44.50	53.06	68.2	-15.14	Pk
Vertical	15540	53.67	10.12	38.80	44.10	58.49	74	-15.51	Pk
Vertical	15540	42.90	10.12	38.80	42.70	49.12	54	-4.88	AV
Horizontal	2981	50.68	5.94	35.18	44.00	47.80	68.2	-20.40	Pk
Horizontal	10360	60.06	8.46	38.71	44.50	62.73	68.2	-5.47	Pk
Horizontal	15540	56.12	10.12	38.38	44.10	60.52	74	-13.48	Pk
Horizontal	15540	41.36	10.12	38.38	44.10	45.76	54	-8.24	AV
middle Channel (5200 MHz)-Above 1G									
Vertical	3561	53.27	6.48	36.35	44.05	52.05	68.2	-16.15	Pk
Vertical	10400	45.26	8.47	37.88	44.51	47.10	68.2	-21.10	Pk
Vertical	15600	58.26	10.12	38.8	44.1	63.08	74	-10.92	Pk
Vertical	15600	41.50	10.12	38.8	42.7	47.72	54	-6.28	AV
Horizontal	3363	56.83	6.48	36.37	44.05	55.63	68.2	-12.57	Pk
Horizontal	10400	41.34	8.47	38.64	44.5	43.95	68.2	-24.25	Pk
Horizontal	15600	54.31	10.12	38.38	44.1	58.71	74	-15.29	Pk
Horizontal	15600	44.52	10.12	38.38	44.1	48.92	54	-5.08	AV
High Channel (5240 MHz)-Above 1G									
Vertical	3926	50.14	7.1	37.24	43.5	50.98	74	-23.02	Pk
Vertical	3926	41.04	7.1	37.24	43.5	41.88	54	-12.12	AV
Vertical	10480	48.43	8.46	37.68	44.5	50.07	68.2	-18.13	Pk
Vertical	15720	48.34	10.12	38.8	44.1	53.16	74	-20.84	Pk
Vertical	15720	44.66	10.12	38.8	42.7	50.88	54	-3.12	AV
Horizontal	3885	41.08	7.1	37.24	43.5	41.92	74	-32.08	Pk
Horizontal	3885	44.53	7.1	37.24	43.5	45.37	54	-8.63	AV
Horizontal	10480	48.53	8.46	38.57	44.5	51.06	68.2	-17.14	Pk
Horizontal	15720	48.28	10.12	38.38	44.1	52.68	74	-21.32	Pk
Horizontal	15720	40.39	10.12	38.38	44.1	44.79	54	-9.21	AV

Note:"802.11n20-MIMO (5.2G)" mode is the worst mode. PK value is lower than the Average value limit, So average didn't record.
The amplitude of spurious emissions that are attenuated by more than 20dB below the permissible value has no need to be reported.
Emission level (dBuV/m) = 20 log Emission level (uV/m).
Corrected Reading: Antenna Factor + Cable Loss + Read Level - Preamp Factor = Level.

EUT :	LCD Smart Projector	Model Name. :	XMM3106
Temperature :	20 ℃	Relative Humidity :	48%
Pressure :	1010 hPa	Test Voltage :	DC 19V
Test Mode :	TX(5.3G) - 802.11ac20-MIMO		

Polar	Frequency	Meter Reading	Cable loss	Antenna Factor	Preamp Factor	Emission Level	Limits	Margin	Detector Type
(H/V)	(MHz)	(dBuV)	(dB)	dB/m	(dB)	(dBuV/m)	(dBuV/m)	(dB)	
Low Channel (5260 MHz)-Above 1G									
Vertical	4633.53	50.69	5.44	35.40	44.00	47.53	74.00	-26.47	Pk
Vertical	4633.53	50.89	5.74	35.40	44.00	48.03	54.00	-5.97	AV
Vertical	10520.40	45.22	8.26	39.75	44.50	48.73	68.20	-19.47	Pk
Vertical	15780.62	58.68	10.12	38.80	44.10	63.50	74.00	-10.50	Pk
Vertical	15780.62	40.57	9.62	38.80	42.70	46.29	54.00	-7.71	AV
Horizontal	4366.43	50.54	5.57	35.18	44.00	47.29	74.00	-26.71	Pk
Horizontal	4366.43	45.74	5.74	35.18	44.00	42.66	54.00	-11.34	AV
Horizontal	10520.54	56.97	8.38	38.71	44.50	59.56	68.20	-8.64	Pk
Horizontal	15780.62	54.57	9.88	38.38	44.10	58.73	74.00	-15.27	Pk
Horizontal	15780.62	44.26	9.94	38.38	44.10	48.48	54.00	-5.52	AV
middle Channel (5280 MHz)-Above 1G									
Vertical	4122.62	49.93	6.08	36.35	44.05	48.31	74.00	-25.69	Pk
Vertical	4122.62	39.74	6.39	36.35	44.05	38.43	54.00	-15.57	AV
Vertical	10560.47	43.29	8.28	37.88	44.51	44.94	68.20	-23.26	Pk
Vertical	15840.64	55.25	9.79	38.8	44.10	59.74	74.00	-14.26	Pk
Vertical	15840.64	43.64	9.70	38.8	42.70	49.44	54.00	-4.56	AV
Horizontal	3869.76	49.70	6.11	36.37	44.05	48.13	74.00	-25.87	Pk
Horizontal	3869.76	46.09	6.27	36.37	44.05	44.68	54.00	-9.32	AV
Horizontal	10561.02	55.18	8.33	38.64	44.50	57.65	68.20	-10.55	Pk
Horizontal	15840.65	53.79	9.99	38.38	44.10	58.06	74.00	-15.94	Pk
Horizontal	15840.65	41.75	9.81	38.38	44.10	45.84	54.00	-8.16	AV
High Channel (5320 MHz)-Above 1G									
Vertical	5366.80	50.05	6.96	37.24	43.50	50.75	74.00	-23.25	Pk
Vertical	5366.80	40.83	7.07	37.24	43.50	41.64	54.00	-12.36	AV
Vertical	10640.86	53.19	8.14	37.68	44.50	54.51	74.00	-19.49	Pk
Vertical	10640.86	45.87	8.35	37.68	44.50	47.40	54.00	-6.60	AV
Vertical	15960.69	57.28	10.11	38.8	44.10	62.09	74.00	-11.91	Pk
Vertical	15960.69	41.83	9.64	38.8	42.70	47.57	54.00	-6.43	AV
Horizontal	5436.87	57.77	7.05	37.24	43.50	58.56	74.00	-15.44	Pk
Horizontal	5436.87	50.02	7.05	37.24	43.50	50.81	54.00	-3.19	AV
Horizontal	10640.52	51.98	8.20	38.57	44.50	54.25	74.00	-19.75	Pk
Horizontal	10640.52	41.55	8.03	38.57	44.50	43.65	54.00	-10.35	AV
Horizontal	15961.16	58.29	9.81	38.38	44.10	62.38	74.00	-11.62	Pk
Horizontal	15961.16	46.16	9.96	38.38	44.10	50.40	54.00	-3.60	AV

Note: 802.11ac20-MIMO (5.3G) mode is the worst mode. PK value is lower than the Average value limit, So average didn't record.
The amplitude of spurious emissions that are attenuated by more than 20dB below the permissible value
has no need to be reported.
Emission level (dBuV/m) = 20 log Emission level (uV/m).
Corrected Reading: Antenna Factor + Cable Loss + Read Level - Preamp Factor = Level.

EUT :	LCD Smart Projector	Model Name. :	XMM3106
Temperature :	20 ℃	Relative Humidity :	48%
Pressure :	1010 hPa	Test Voltage :	DC 19V
Test Mode :	TX(5.6G) - 802.11n20-MIMO		

Polar	Frequency	Meter Reading	Cable loss	Antenna Factor	Preamp Factor	Emission Level	Limits	Margin	Detector Type
(H/V)	(MHz)	(dBuV)	(dB)	dB/m	(dB)	(dBuV/m)	(dBuV/m)	(dB)	
Low Channel (5500 MHz)-Above 1G									
Vertical	5433.30	53.94	5.61	35.40	44.00	50.95	74.00	-23.05	Pk
Vertical	5433.30	43.84	5.61	35.40	44.00	40.85	54.00	-13.15	AV
Vertical	11020.32	54.25	8.24	39.75	44.50	57.74	74.00	-16.26	Pk
Vertical	11020.32	45.18	8.35	39.75	44.50	48.78	54.00	-5.22	AV
Vertical	16530.12	43.87	10.05	38.80	44.10	48.62	68.20	-19.58	Pk
Horizontal	5126.75	51.25	5.78	35.18	44.00	48.21	74.00	-25.79	Pk
Horizontal	5126.75	43.70	5.66	35.18	44.00	40.54	54.00	-13.46	AV
Horizontal	11020.32	57.69	8.22	38.71	44.50	60.12	74.00	-13.88	Pk
Horizontal	11020.32	42.34	8.14	38.71	44.50	44.69	54.00	-9.31	AV
Horizontal	16530.12	50.58	10.04	38.38	44.10	54.90	68.20	-13.30	Pk
Middle Channel (5600 MHz)-Above 1G									
Vertical	5647.61	57.87	6.79	37.24	43.50	58.40	68.20	-9.80	Pk
Vertical	11200.71	49.86	8.10	37.68	44.50	51.14	74.00	-22.86	Pk
Vertical	11200.71	49.97	8.23	37.68	44.50	51.38	54.00	-2.62	AV
Vertical	16770.00	48.46	9.70	38.80	44.10	52.86	68.20	-15.34	Pk
Horizontal	5433.54	58.65	6.74	37.24	43.50	59.13	74.00	-14.87	Pk
Horizontal	5433.54	48.69	6.74	37.24	43.50	49.17	54.00	-4.83	AV
Horizontal	11200.71	58.37	8.25	38.57	44.50	60.69	74.00	-13.31	Pk
Horizontal	11200.71	48.37	8.25	38.57	44.50	50.69	54.00	-3.31	AV
Horizontal	16770.00	48.54	10.09	38.38	44.10	52.91	68.20	-15.29	Pk
High Channel (5700 MHz)-Above 1G									
Vertical	5647.61	57.09	6.79	37.24	43.50	57.62	68.20	-10.58	Pk
Vertical	11340.54	58.54	8.10	37.68	44.50	59.82	74.00	-14.18	Pk
Vertical	11340.54	48.54	8.23	37.68	44.50	49.95	54.00	-4.05	AV
Vertical	17010.36	48.58	9.70	38.80	44.10	52.98	68.20	-15.22	Pk
Horizontal	5433.54	54.28	6.74	37.24	43.50	54.76	74.00	-19.24	Pk
Horizontal	5433.54	48.71	6.74	37.24	43.50	49.19	54.00	-4.81	AV
Horizontal	11340.54	57.82	8.25	38.57	44.50	60.14	74.00	-13.86	Pk
Horizontal	11340.54	49.17	8.25	38.57	44.50	51.49	54.00	-2.51	AV
Horizontal	17010.36	56.62	10.09	38.38	44.10	60.99	68.20	-7.21	Pk

Note:"802.11n20-MIMO(5.6G)" mode is the worst mode. PK value is lower than the Average value limit, So average didn't record.

The amplitude of spurious emissions that are attenuated by more than 20dB below the permissible value has no need to be reported.

Emission level (dBuV/m) = 20 log Emission level (uV/m).

Corrected Reading: Antenna Factor + Cable Loss + Read Level - Preamp Factor = Level.

EUT :	LCD Smart Projector	Model Name. :	XMM3106
Temperature :	20 ℃	Relative Humidity :	48%
Pressure :	1010 hPa	Test Voltage :	DC 19V
Test Mode :	TX (5.8G) -- 802.11ac20-MIMO		

Polar	Frequency	Meter Reading	Cable loss	Antenna Factor	Preamp Factor	Emission Level	Limits	Margin	Detector Type
(H/V)	(MHz)	(dBuV)	(dB)	dB/m	(dB)	(dBuV/m)	(dBuV/m)	(dB)	
Low Channel (5745 MHz)-Above 1G									
Vertical	2806.9	52.65	5.94	35.40	44.00	49.99	74.00	-24.01	Pk
Vertical	2806.9	50.39	5.94	35.40	44.00	47.73	54.00	-6.27	AV
Vertical	11490.56	55.20	8.46	39.75	44.50	58.91	74.00	-15.09	Pk
Vertical	11490.56	42.96	8.46	39.75	44.50	46.67	54.00	-7.33	AV
Vertical	17235.32	47.85	10.12	38.80	44.10	52.67	68.20	-15.53	Pk
Horizontal	2911.524	52.70	5.94	35.18	44.00	49.82	68.20	-18.38	Pk
Horizontal	11490.56	55.42	8.46	38.71	44.50	58.09	74.00	-15.91	AV
Horizontal	11490.56	39.64	8.46	38.71	44.50	42.31	54.00	-11.69	Pk
Horizontal	17235.56	48.47	10.12	38.38	44.10	52.87	68.20	-15.33	AV
middle Channel (5785 MHz)-Above 1G									
Vertical	3763.083	54.38	6.48	36.35	44.05	53.16	74.00	-20.84	Pk
Vertical	3763.083	44.18	6.48	36.35	44.05	42.96	54.00	-11.04	AV
Vertical	11570.56	53.75	8.47	37.88	44.51	55.59	74.00	-18.41	Pk
Vertical	11570.56	40.18	8.47	37.88	44.51	42.02	54.00	-11.98	AV
Vertical	17355.56	44.39	10.12	38.8	44.10	49.21	68.20	-18.99	Pk
Horizontal	3561.585	53.99	6.48	36.37	44.05	52.79	68.20	-15.41	Pk
Horizontal	11570.56	56.06	8.47	38.64	44.50	58.67	74.00	-15.33	AV
Horizontal	11570.56	41.16	8.47	38.64	44.50	43.77	54.00	-10.23	Pk
Horizontal	17355.56	55.32	10.12	38.38	44.10	59.72	74.00	-14.28	AV
Horizontal	17355.35	42.05	10.12	38.38	44.10	46.45	54.00	-7.55	Pk
High Channel (5825 MHz)-Above 1G									
Vertical	3907.168	52.12	7.10	37.24	43.50	52.96	74.00	-21.04	Pk
Vertical	3907.168	40.71	7.10	37.24	43.50	41.55	54.00	-12.45	AV
Vertical	11650.54	53.40	8.46	37.68	44.50	55.04	74.00	-18.96	Pk
Vertical	11650.54	45.21	8.46	37.68	44.50	46.85	54.00	-7.15	AV
Vertical	17475.54	45.18	10.12	38.8	44.10	50.00	68.20	-18.20	Pk
Horizontal	3912.779	56.53	7.10	37.24	43.50	57.37	74.00	-16.63	Pk
Horizontal	3912.779	45.78	7.10	37.24	43.50	46.62	54.00	-7.38	AV
Horizontal	11650.54	56.87	8.46	38.57	44.50	59.40	74.00	-14.60	Pk
Horizontal	11650.54	41.51	8.46	38.57	44.50	44.04	54.00	-9.96	AV
Horizontal	17475.54	49.01	10.12	38.38	44.10	53.41	68.20	-14.79	Pk

Note:"802.11ac20 MIMO (5.8G)" mode is the worst mode. PK value is lower than the Average value limit, So average didn't record.
The amplitude of spurious emissions that are attenuated by more than 20dB below the permissible value
has no need to be reported.
Emission level (dBuV/m) = 20 log Emission level (uV/m).
Corrected Reading: Antenna Factor + Cable Loss + Read Level - Preamp Factor = Level.

3.2.9 TEST RESULTS (18GHz-40GHz)

EUT：	LCD Smart Projector	Model Name. ：	XMM3106
Temperature：	20 ℃	Relative Humidity：	48%
Pressure：	1010 hPa	Test Voltage ：	DC 19V
Test Mode ：	TX (5.2G)-802.11n20-MIMO ;TX (5.3G)-802.11ac20-MIMO TX (5.6G)-802.11n20-MIMO;TX (5.8G)-802.11ac20-MIMO		

All the modulation modes have been tested, and the worst result was report as below:

Low Channel (5180 MHz)-Above 1G

Horizontal

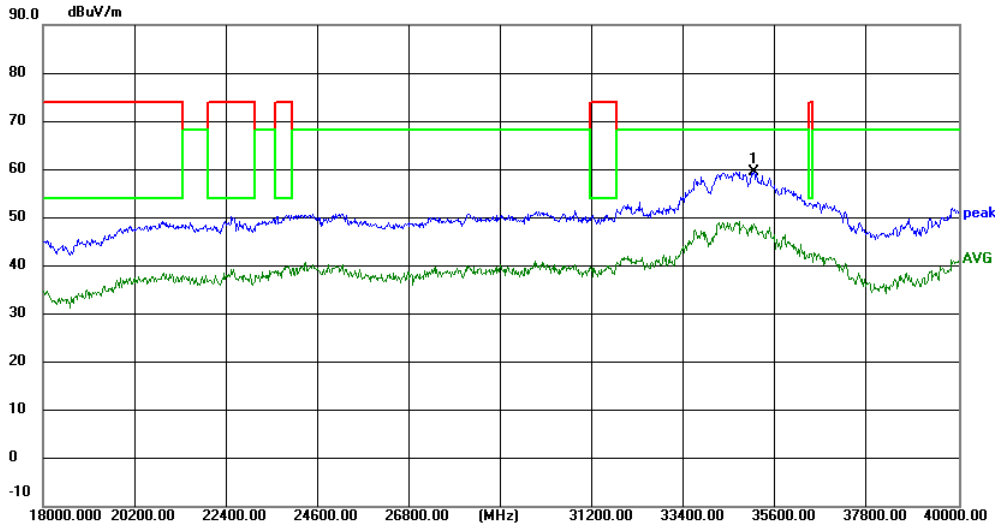

Frequency (MHz)	Reading (dBuV)	Factor (dB/m)	Level (dBuV/m)	Limit (dBuV/m)	Margin (dB)	Det.
35083.000	55.95	3.49	59.44	68.20	-8.76	peak

Vertical

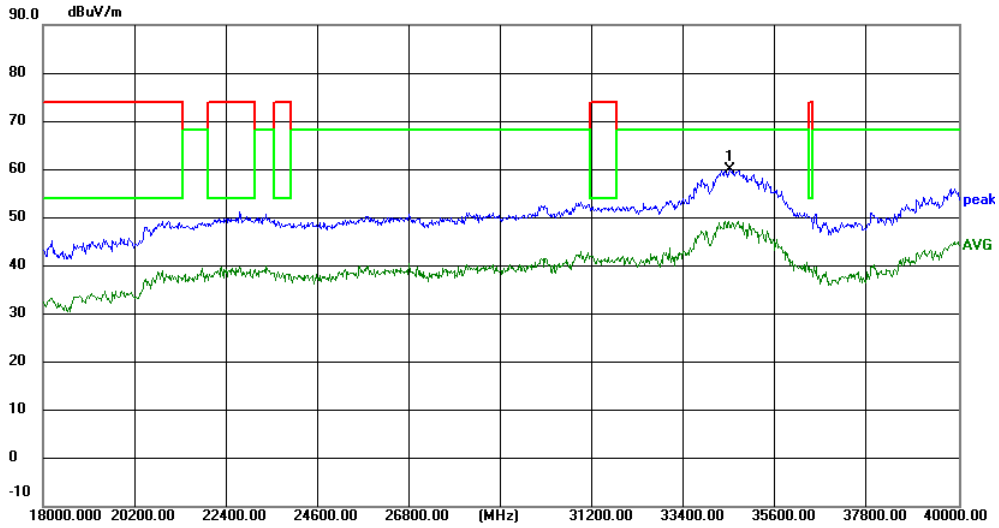

Frequency (MHz)	Reading (dBuV)	Factor (dB/m)	Level (dBuV/m)	Limit (dBuV/m)	Margin (dB)	Det.
34541.800	57.48	2.59	60.07	68.20	-8.13	peak

High Channel (5240 MHz)-Above 1G

Horizontal

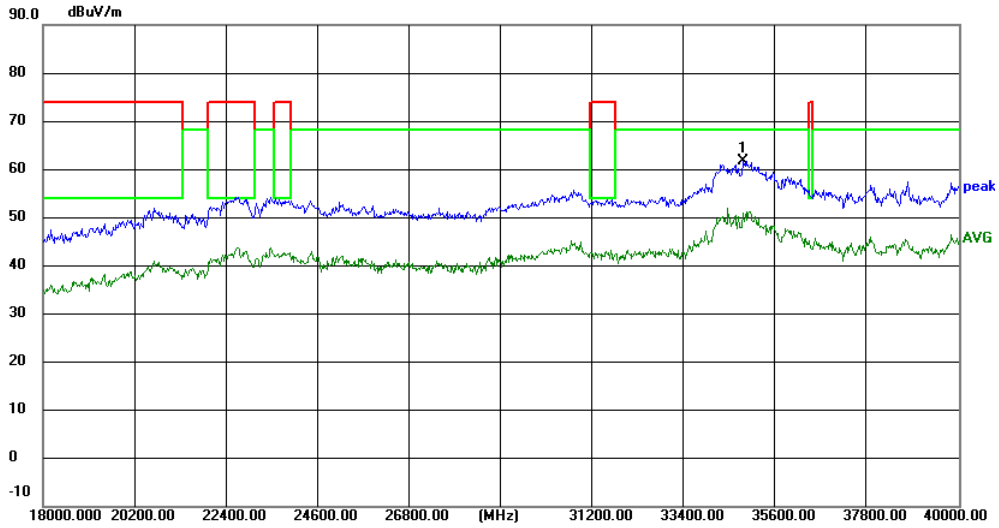

Frequency (MHz)	Reading (dBuV)	Factor (dB/m)	Level (dBuV/m)	Limit (dBuV/m)	Margin (dB)	Det.
34854.200	58.29	3.36	61.65	68.20	-6.55	peak

Vertical

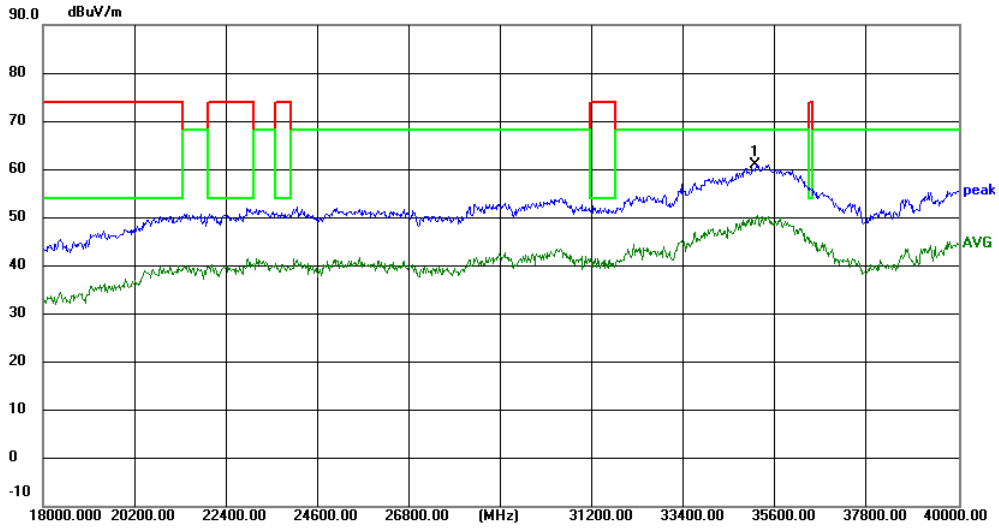

Frequency (MHz)	Reading (dBuV)	Factor (dB/m)	Level (dBuV/m)	Limit (dBuV/m)	Margin (dB)	Det.
35158.533	57.77	3.21	60.98	68.20	-7.22	peak

Note:802.11n20-MIMO mode is the worst mode.

Low Channel (5260 MHz)-Above 1G

Horizontal

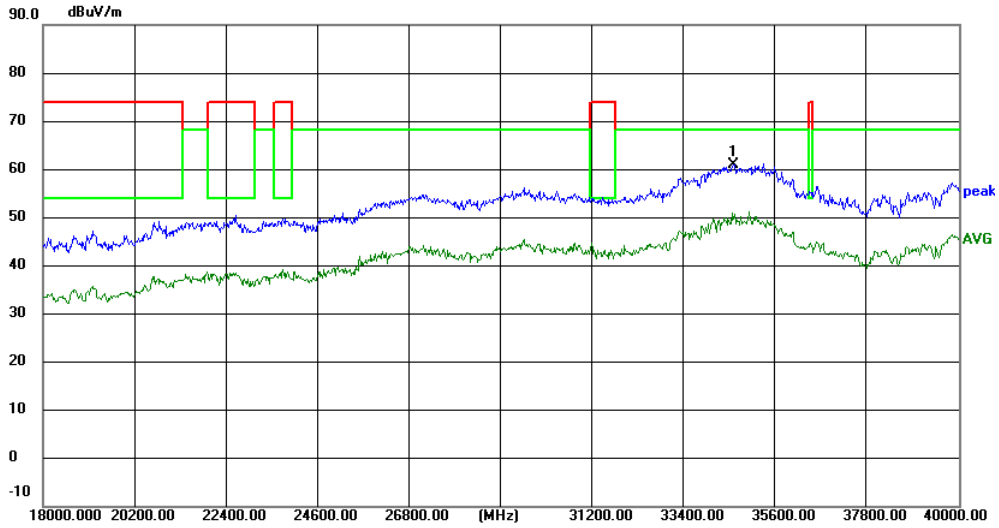

Frequency (MHz)	Reading (dBuV)	Factor (dB/m)	Level (dBuV/m)	Limit (dBuV/m)	Margin (dB)	Det.
34614.400	58.30	2.74	61.04	68.20	-7.16	peak

Vertical

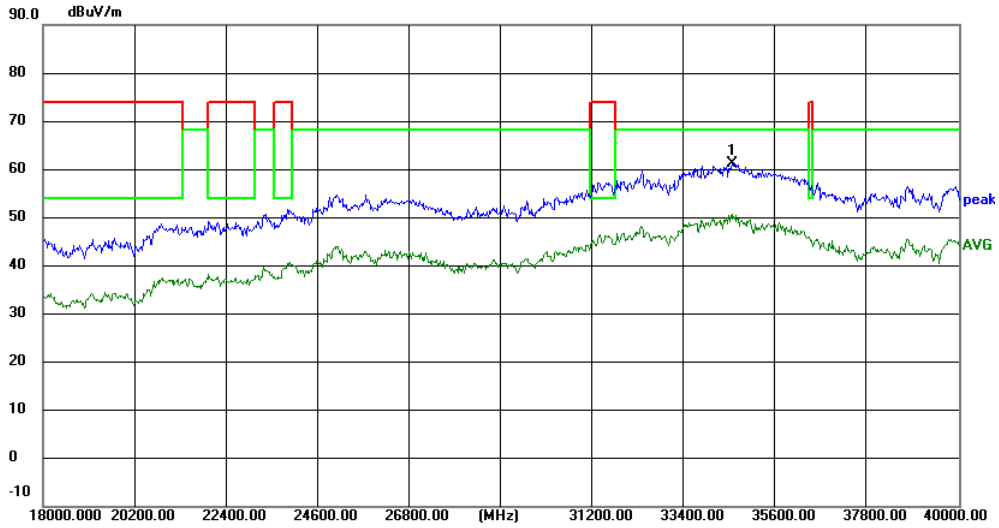

Frequency (MHz)	Reading (dBuV)	Factor (dB/m)	Level (dBuV/m)	Limit (dBuV/m)	Margin (dB)	Det.
34579.200	58.47	2.68	61.15	68.20	-7.05	peak

High Channel (5320 MHz)-Above 1G

Horizontal

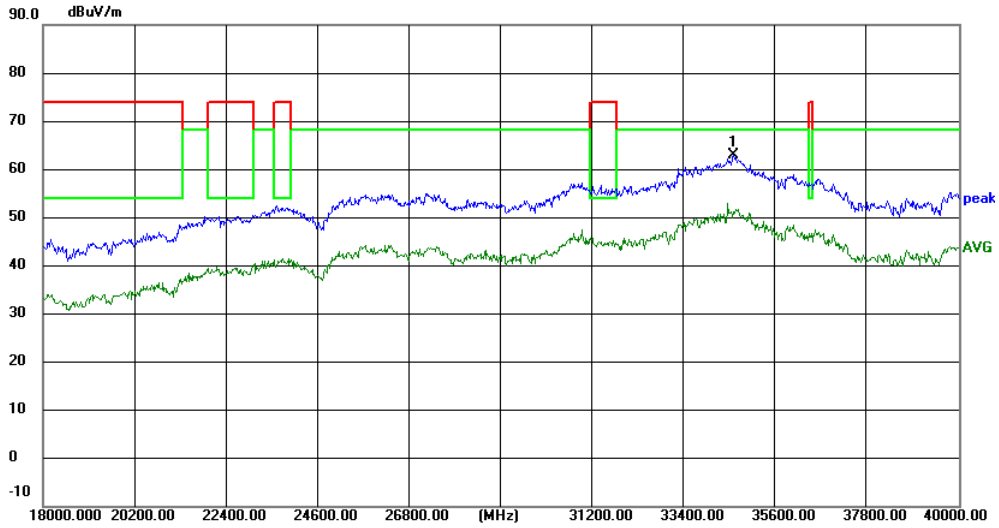

Frequency (MHz)	Reading (dBuV)	Factor (dB/m)	Level (dBuV/m)	Limit (dBuV/m)	Margin (dB)	Det.
34609.267	60.13	2.74	62.87	68.20	-5.33	peak

Vertical

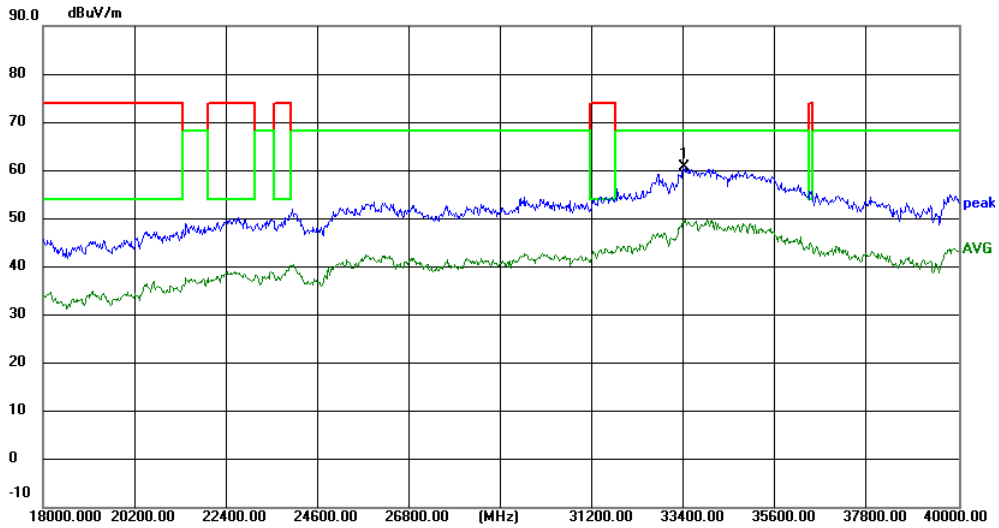

Frequency (MHz)	Reading (dBuV)	Factor (dB/m)	Level (dBuV/m)	Limit (dBuV/m)	Margin (dB)	Det.
33433.733	61.66	-0.93	60.73	68.20	-7.47	peak

Note:802.11ac20-MIMO mode is the worst mode.

Low Channel (5500 MHz)-Above 1G

Horizontal

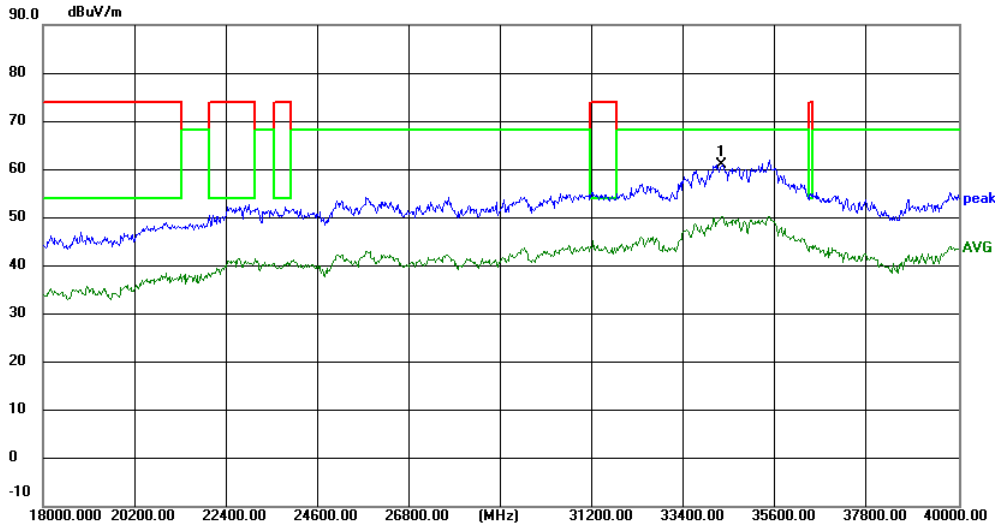

Frequency (MHz)	Reading (dBuV)	Factor (dB/m)	Level (dBuV/m)	Limit (dBuV/m)	Margin (dB)	Det.
34335.733	59.18	1.81	60.99	68.20	-7.21	peak

Vertical

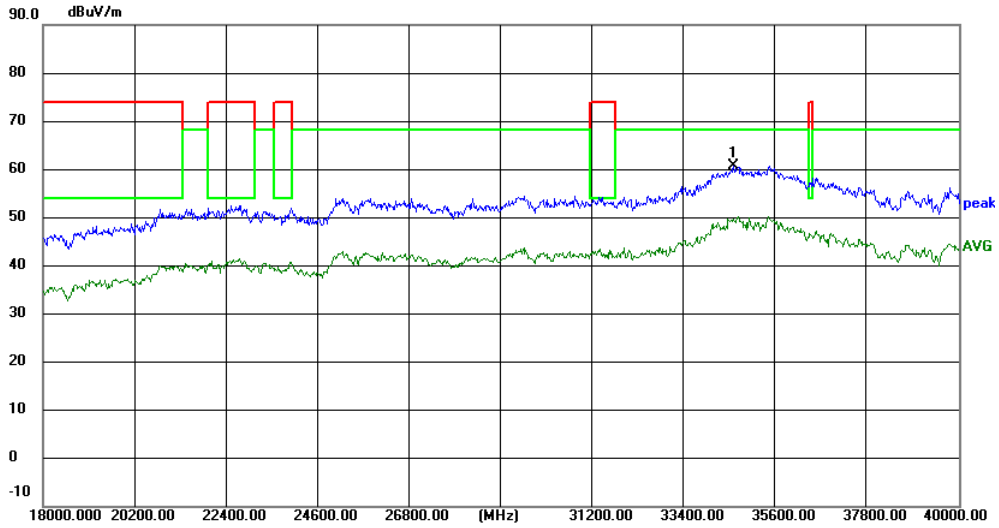

Frequency (MHz)	Reading (dBuV)	Factor (dB/m)	Level (dBuV/m)	Limit (dBuV/m)	Margin (dB)	Det.
34596.800	57.90	2.71	60.61	68.20	-7.59	peak

High Channel (5700 MHz)-Above 1G

Horizontal

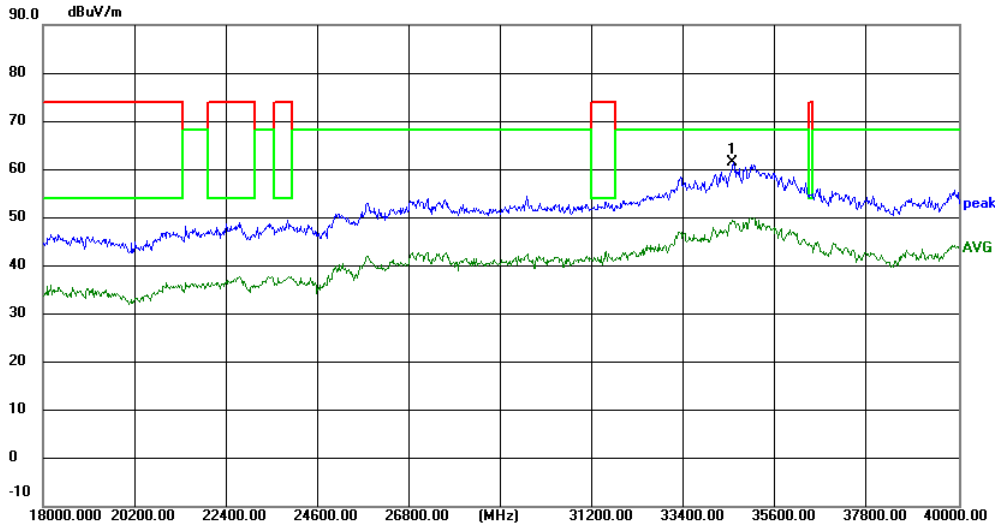

Frequency (MHz)	Reading (dBuV)	Factor (dB/m)	Level (dBuV/m)	Limit (dBuV/m)	Margin (dB)	Det.
34597.533	58.74	2.71	61.45	68.20	-6.75	peak

Vertical

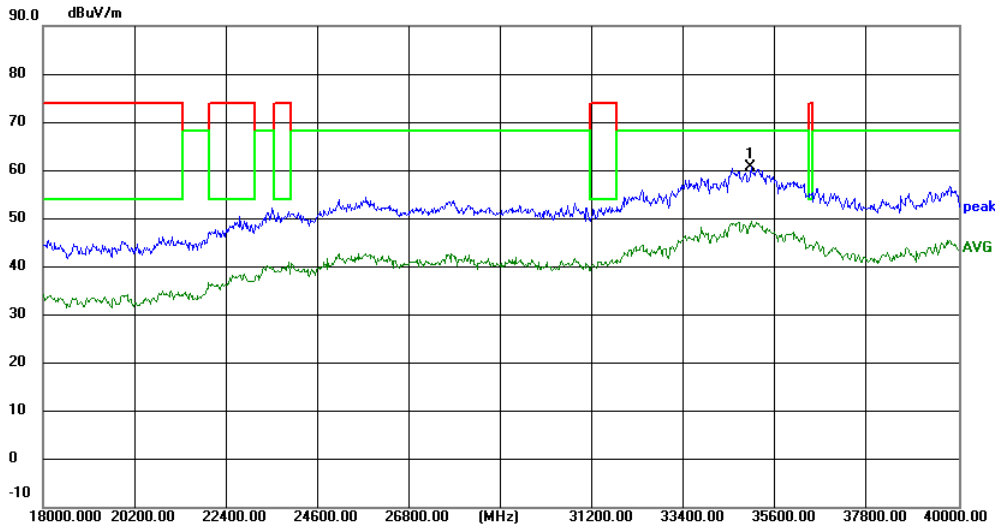

Frequency (MHz)	Reading (dBuV)	Factor (dB/m)	Level (dBuV/m)	Limit (dBuV/m)	Margin (dB)	Det.
35026.533	57.05	3.70	60.75	68.20	-7.45	peak

Note:802.11n20-MIMO mode is the worst mode.

Low Channel (5745 MHz)-Above 1G

Horizontal

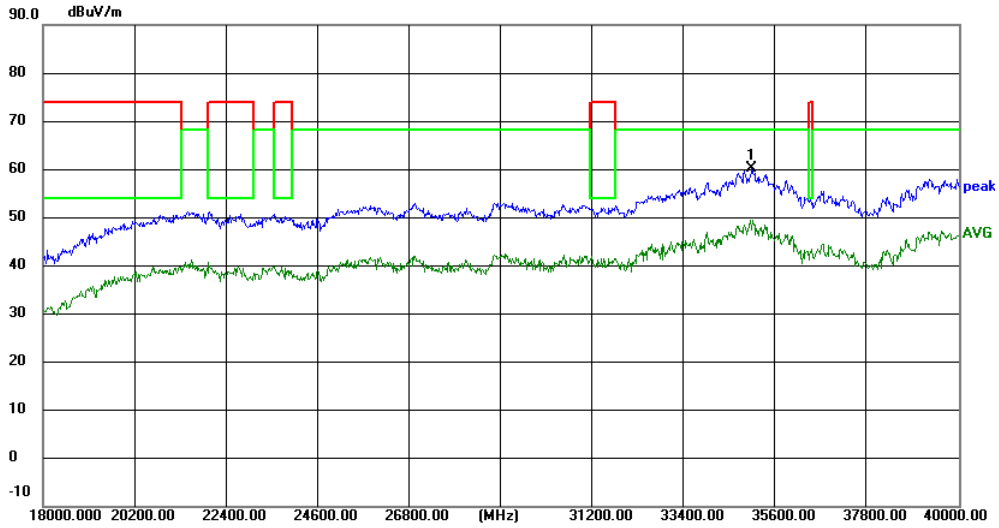

Frequency (MHz)	Reading (dBuV)	Factor (dB/m)	Level (dBuV/m)	Limit (dBuV/m)	Margin (dB)	Det.
35036.800	56.44	3.66	60.10	68.20	-8.10	peak

Vertical

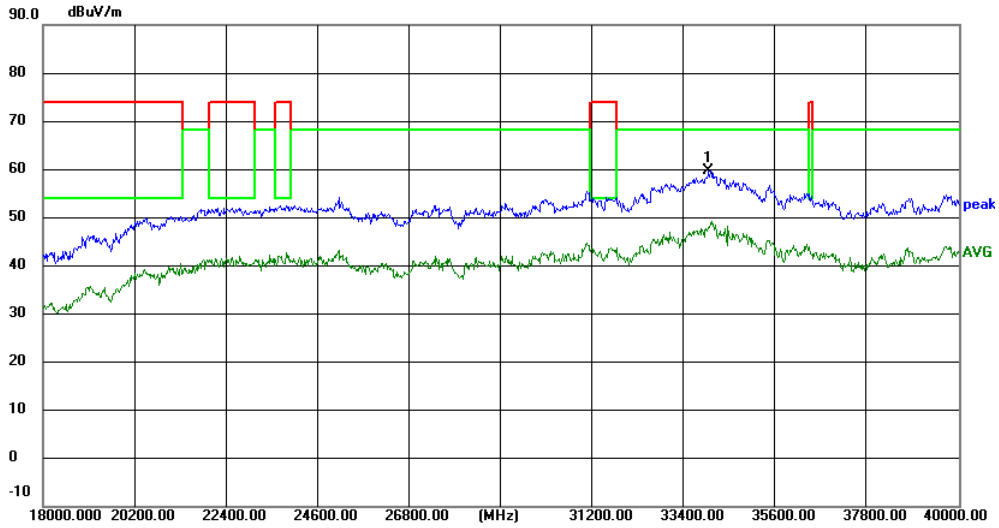

Frequency (MHz)	Reading (dBuV)	Factor (dB/m)	Level (dBuV/m)	Limit (dBuV/m)	Margin (dB)	Det.
33999.133	58.96	0.70	59.66	68.20	-8.54	peak

High Channel (5825 MHz)-Above 1G

Horizontal

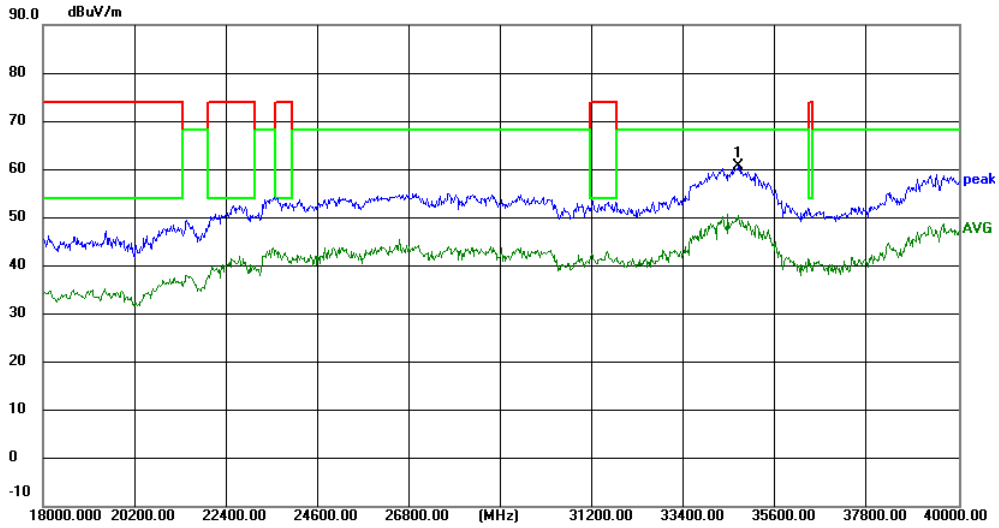

Frequency (MHz)	Reading (dBuV)	Factor (dB/m)	Level (dBuV/m)	Limit (dBuV/m)	Margin (dB)	Det.
34722.200	57.82	2.98	60.80	68.20	-7.40	peak

Vertical

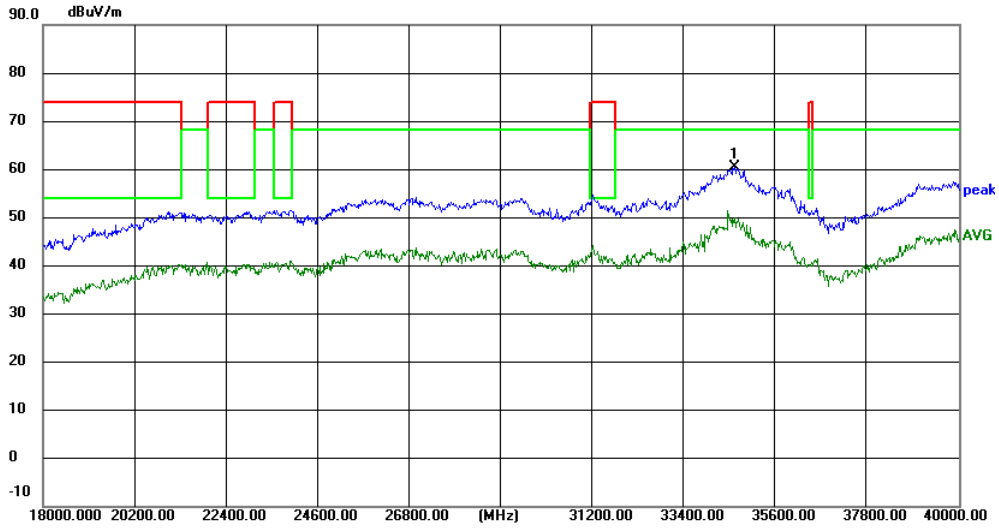

Frequency (MHz)	Reading (dBuV)	Factor (dB/m)	Level (dBuV/m)	Limit (dBuV/m)	Margin (dB)	Det.
34618.067	57.59	2.75	60.34	68.20	-7.86	peak

Note:802.11ac20-MIMO mode is the worst mode.

3.2.10 Spurious Emission in Restricted Band 4.5GHz~5.150 GHz& 5.350GHz~5460GHz

EUT：	LCD Smart Projector	Model Name. ：	XMM3106
Temperature：	20 ℃	Relative Humidity：	48%
Pressure：	1010 hPa	Test Voltage ：	DC 19V
Test Mode ：	TX (5.2G)-802.11n20-MIMO		

All the modulation modes have been tested, The report just record the worst data mode.

Frequency	Meter Reading	Cable Loss	Antenna Factor	Preamp Factor	Emission Level	Limits	Margin	Detector	Comment
(MHz)	(dBμV)	(dB)	dB/m	(dB)	(dBμV/m)	(dBμV/m)	(dB)	Type	
5.2G WIFI-802.11n20-MIMO Mode									
4500	64.83	5.2	35.6	44.2	61.43	74	-12.57	Pk	Horizontal
4500	50.48	5.2	35.6	44.2	47.08	54	-6.92	AV	Horizontal
4500	60.85	5.2	35.6	44.2	57.45	74	-16.55	Pk	Horizontal
4500	53.26	5.2	35.6	44.2	49.86	54	-4.14	AV	Horizontal
5150	65.88	5.36	35.66	44.22	62.68	74	-11.32	Pk	Horizontal
5150	51.82	5.36	35.66	44.22	48.62	54	-5.38	AV	Horizontal
5150	61.21	5.36	35.66	44.22	58.01	74	-15.99	Pk	Vertical
5150	48.88	5.36	35.66	44.22	45.68	54	-8.32	AV	Vertical
5350	64.54	5.68	35.68	44.22	61.68	74	-12.32	Pk	Vertical
5350	52.49	5.68	35.68	44.22	49.63	54	-4.37	AV	Vertical
5350	61.28	5.68	35.68	44.22	58.42	74	-15.58	Pk	Horizontal
5350	47.31	5.68	35.68	44.22	44.45	54	-9.55	AV	Horizontal

Note: (1) Emission Level= Antenna Factor + Cable Loss + Read Level - Preamp Factor

(2) “802.11n20-MIMO ” mode is the worst mode. When PK value is lower than the Average value limit, average don't record.

EUT：	LCD Smart Projector	Model Name. ：	XMM3106
Temperature：	20 ℃	Relative Humidity：	48%
Pressure：	1010 hPa	Test Voltage ：	DC 19V
Test Mode ：	TX (5.3G)-802.11ac20-MIMO		

All the modulation modes have been tested, The report just record the worst data mode.

Frequency	Meter Reading	Cable Loss	Antenna Factor	Preamp Factor	Emission Level	Limits	Margin	Detector	Comment
(MHz)	(dBμV)	(dB)	dB/m	(dB)	(dBμV/m)	(dBμV/m)	(dB)	Type	
High Channel (5320 MHz)-Above 1G									
5350.00	62.53	6.96	37.24	43.50	63.23	74.00	-10.77	Pk	Vertical
5350.00	51.11	7.07	37.24	43.50	51.92	54.00	-2.08	AV	Vertical
5350.00	63.94	7.05	37.24	43.50	64.73	74.00	-9.27	Pk	Horizontal
5350.00	48.12	7.05	37.24	43.50	48.91	54.00	-5.09	AV	Horizontal

Note: (1) Emission Level= Antenna Factor + Cable Loss + Read Level - Preamp Factor

(2) “802.11ac20-MIMO ” mode is the worst mode. When PK value is lower than the Average value limit, average don't record.

EUT：	LCD Smart Projector	Model Name. ：	XMM3106
Temperature：	20 ℃	Relative Humidity：	48%
Pressure：	1010 hPa	Test Voltage ：	DC 19V
Test Mode ：	TX (5.6G)-802.11n20-MIMO		

All the modulation modes have been tested, The report just record the worst data mode.

Frequency	Meter Reading	Cable Loss	Antenna Factor	Preamp Factor	Emission Level	Limits	Margin	Detector	Comment
(MHz)	(dBμV)	(dB)	dB/m	(dB)	(dBμV/m)	(dBμV/m)	(dB)	Type	
Low Channel (5500 MHz)-Above 1G									
5460.00	63.92	5.61	35.40	44.00	60.93	74.00	-13.07	Pk	Vertical
5460.00	52.64	5.76	35.40	44.00	49.80	54.00	-4.20	AV	Vertical
5460.00	58.61	5.78	35.18	44.00	55.57	74.00	-18.43	Pk	Horizontal
5460.00	46.61	5.66	35.18	44.00	43.45	54.00	-10.55	AV	Horizontal

Note: (1) Emission Level= Antenna Factor + Cable Loss + Read Level - Preamp Factor

(2) “802.11n20-MIMO ” mode is the worst mode. When PK value is lower than the Average value limit, average don't record.

4 POWER SPECTRAL DENSITY TEST

4.1 APPLIED PROCEDURES / LIMIT

According to FCC §15.407(a)

For the band 5.15-5.25 GHz,

(i) For an outdoor access point operating in the band 5.15-5.25 GHz, the maximum power spectral density shall not exceed 17 dBm in any 1 megahertz band. If transmitting antennas of directional gain greater than 6 dBi are used, both the maximum conducted output power and the maximum power spectral density shall be reduced by the amount in dB that the directional gain of the antenna exceeds 6 dBi. The maximum e.i.r.p. at any elevation angle above 30 degrees as measured from the horizon must not exceed 125 mW (21 dBm).

(ii) For an indoor access point operating in the band 5.15-5.25 GHz, the maximum power spectral density shall not exceed 17 dBm in any 1 megahertz band. If transmitting antennas of directional gain greater than 6 dBi are used, both the maximum conducted output power and the maximum power spectral density shall be reduced by the amount in dB that the directional gain of the antenna exceeds 6 dBi.

(iii) For fixed point-to-point access points operating in the band 5.15-5.25 GHz, the maximum power spectral density shall not exceed 17 dBm in any 1 megahertz band. Fixed point-to-point U-NII devices may employ antennas with directional gain up to 23 dBi without any corresponding reduction in the maximum conducted output power or maximum power spectral density. For fixed point-to-point transmitters that employ a directional antenna gain greater than 23 dBi, a 1 dB reduction in maximum conducted output power and maximum power spectral density is required for each 1 dB of antenna gain in excess of 23 dBi. Fixed, point-to-point operations exclude the use of point-to-multipoint systems, omnidirectional applications, and multiple collocated transmitters transmitting the same information. The operator of the U-NII device, or if the equipment is professionally installed, the installer, is responsible for ensuring that systems employing high gain directional antennas are used exclusively for fixed, point-to-point operations.

(iv) For client devices in the 5.15-5.25 GHz band, the maximum power spectral density shall not exceed 11 dBm in any 1 megahertz band. If transmitting antennas of directional gain greater than 6 dBi are used, both the maximum conducted output power and the maximum power spectral density shall be reduced by the amount in dB that the directional gain of the antenna exceeds 6 dBi.

For the 5.25-5.35 GHz and 5.47-5.725 GHz bands, the maximum conducted output power over the frequency bands of operation shall not exceed the lesser of 250 mW or 11 dBm + 10 log B, where B is the 26 dB emission bandwidth in megahertz. In addition, the maximum power spectral density shall not exceed 11 dBm in any 1 megahertz band. If transmitting antennas of directional gain greater than 6 dBi are used, both the maximum conducted output power and the maximum power spectral density shall be reduced by the amount in dB that the directional gain of the antenna exceeds 6 dBi.

For the band 5.725-5.85 GHz

(3)For the band 5.725-5.85 GHz, the maximum power spectral density shall not exceed 30 dBm in any 500-kHz band. If transmitting antennas of directional gain greater than 6 dBi are used, both the maximum conducted output power and the maximum power spectral density shall be reduced by the amount in dB that the directional gain of the antenna exceeds 6 dBi.

,

4.2 TEST PROCEDURE

For devices operating in the bands 5.15-5.25 GHz, 5.25-5.35 GHz, and 5.47-5.725 GHz, the above procedures make use of 1 MHz RBW to satisfy directly the 1 MHz reference bandwidth specified in § 15.407(a)(5). For devices operating in the band 5.725-5.85 GHz, the rules specify a measurement bandwidth of 500 kHz. Many spectrum analyzers do not have 500 kHz RBW, thus a narrower RBW may need to be used. The rules permit the use of a RBWs less than 1 MHz, or 500 kHz, "provided that the measured power is integrated over the full reference bandwidth" to show the total power over the specified measurement bandwidth (i.e., 1 MHz, or 500 kHz). If measurements are performed using a reduced resolution bandwidth (< 1 MHz, or < 500 kHz) and integrated over 1 MHz, or 500 KHz bandwidth, the following adjustments to the procedures apply:

a) Set RBW ≥ 1/T, where T is defined in section II.B.I.a).

b) Set VBW ≥ 3 RBW.

c) If measurement bandwidth of Maximum PSD is specified in 500 kHz, add 10log(500kHz/RBW) to the measured result, whereas RBW (< 500 KHz) is the reduced resolution bandwidth of the spectrum analyzer set during measurement.

d) If measurement bandwidth of Maximum PSD is specified in 1 MHz, add 10log(1MHz/RBW) to the measured result, whereas RBW (< 1 MHz) is the reduced resolution bandwidth of spectrum analyzer set during measurement.

e) Care must be taken to ensure that the measurements are performed during a period of continuous transmission or are corrected upward for duty cycle.

Note: As a practical matter, it is recommended to use reduced RBW of 100 KHz for the sections 5.c) and 5.d) above, since RBW=100 KHZ is available on nearly all spectrum analyzers.

4.3 DEVIATION FROM STANDARD

No deviation.

4.4 TEST SETUP

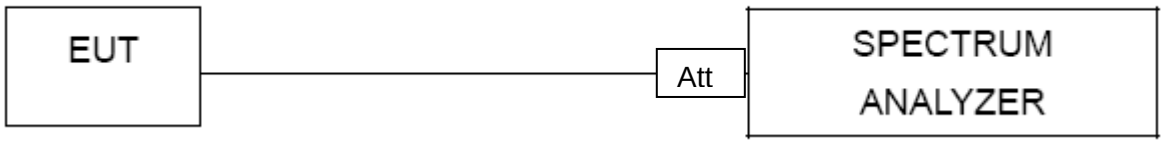

4.5 EUT OPERATION CONDITIONS

The EUT tested system was configured as the statements of 2.1 Unless otherwise a special operating condition is specified in the follows during the testing.

4.6 TEST RESULTS

EUT：	LCD Smart Projector	Model Name ：	XMM3106
Temperature：	26 ℃	Relative Humidity：	54%
Pressure：	1015 hPa	Test Voltage ：	DC 19V
Test Mode ：	TX Frequency Band 1 (5150-5250MHz), Band 2A (5250-5350MHz), Band 2C (5470-5725MHz), Band 3 (5745-5825MHz)		

Note: Band1& Band 2A & Band 2C&Band3 For 802.11n/ac 5GHz has MIMO mode.Directional gain=5.27dbi
5.27dbi＜6.0dbi so power limit don't need to change

Test data reference attachment.

5. 26DB & 99% EMISSION BANDWIDTH

5.1 APPLIED PROCEDURES / LIMIT

The maximum power spectral density is measured as a conducted emission by direct connection of a calibrated test instrument to the equipment under test. If the device cannot be connected directly, alternative techniques acceptable to the Commission may be used. Measurements in the 5.725-5.85 GHz band are made over a reference bandwidth of 500 kHz or the 26 dB emission bandwidth of the device, whichever is less. Measurements in the 5.15-5.25 GHz, 5.25-5.35 GHz, and the 5.47-5.725 GHz bands are made over a bandwidth of 1 MHz or the 26 dB emission bandwidth of the device, whichever is less. A narrower resolution bandwidth can be used, provided that the measured power is integrated over the full reference bandwidth.

5.2 TEST PROCEDURE

a) Set RBW = approximately 1% of the emission bandwidth.
b) Set the VBW > RBW.
c) Detector = Peak.
d) Trace mode = max hold.
e) Measure the maximum width of the emission that is 26 dB down from the maximum of the emission. Compare this with the RBW setting of the analyzer. Readjust RBW and repeat measurement as needed until the RBW/EBW ratio is approximately 1%.

The following procedure shall be used for measuring (99 %) power bandwidth:

1. Set center frequency to the nominal EUT channel center frequency.
2. Set span = 1.5 times to 5.0 times the OBW.
3. Set RBW = 1 % to 5 % of the OBW
4. Set VBW ≥ 3 · RBW
5. Video averaging is not permitted. Where practical, a sample detection and single sweep mode shall be used. Otherwise, peak detection and max hold mode (until the trace stabilizes) shall be used.
6. Use the 99 % power bandwidth function of the instrument (if available).
7. If the instrument does not have a 99 % power bandwidth function, the trace data points are recovered and directly summed in power units. The recovered amplitude data points, beginning at the lowest frequency, are placed in a running sum until 0.5 % of the total is reached; that frequency is recorded as the lower frequency. The process is repeated until 99.5 % of the total is reached; that frequency is recorded as the upper frequency. The 99% occupied bandwidth is the difference between these two frequencies.

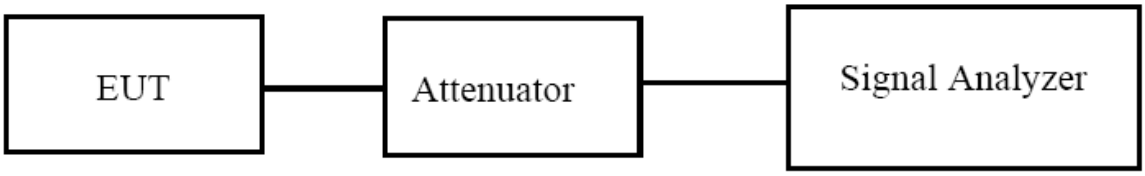

5.3 EUT OPERATION CONDITIONS

The EUT tested system was configured as the statements of 2.4 Unless otherwise a special operating condition is specified in the follows during the testing.

5.4 TEST RESULTS

EUT：	LCD Smart Projector	Model Name ：	XMM3106
Temperature：	26 ℃	Relative Humidity：	54%
Pressure：	1012 hPa	Test Voltage ：	DC 19V
Test Mode ：	TX Frequency Band 1 (5150-5250MHz), Band 2A (5250-5350MHz), Band 2C(5470-5725MHz), Band 3(5725-5850MHz)		

Test data reference attachment.

6. MINIMUM 6 DB BANDWIDTH

6.1 APPLIED PROCEDURES / LIMIT

According to FCC §15.407(e)
(e) Within the 5.725-5.85 GHz band, the minimum 6 dB bandwidth of U-NII devices shall be at least 500 kHz.

6.2 EST PROCEDURE

Section 15.407(e) specifies the minimum 6 dB emission bandwidth of at least 500 KHz for the band 5.715-5.85 GHz. The following procedure shall be used for measuring this bandwidth:

a) Set RBW = 100 kHz.

b) Set the video bandwidth (VBW) ≥ 3 × RBW.

c) Detector = Peak.

d) Trace mode = max hold.

e) Sweep = auto couple.

f) Allow the trace to stabilize.

g) Measure the maximum width of the emission that is constrained by the frequencies associated with the two outermost amplitude points (upper and lower frequencies) that are attenuated by 6 dB relative to the maximum level measured in the fundamental emission.

6.3 DEVIATION FROM STANDARD

No deviation.

6.4 TEST SETUP

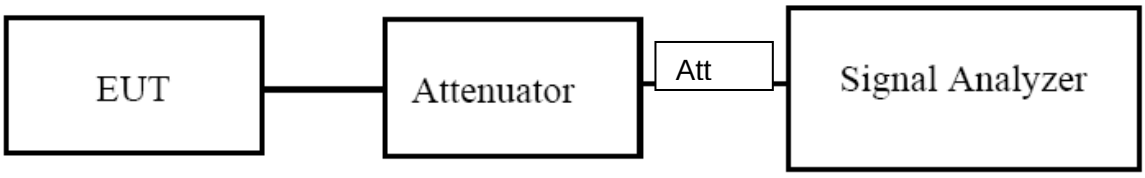

6.5 EUT OPERATION CONDITIONS

The EUT tested system was configured as the statements of 2.4 Unless otherwise a special operating condition is specified in the follows during the testing.

6.6 TEST RESULTS

EUT：	LCD Smart Projector	Model Name ：	XMM3106
Temperature：	26 ℃	Relative Humidity：	54%
Pressure：	1012 hPa	Test Voltage ：	DC 19V
Test Mode ：	TX (5G) Mode Frequency Band 3 (5725-5850MHz)		

Test data reference attachment.

7. MAXIMUM CONDUCTED OUTPUT POWER

7.1 PPLIED PROCEDURES / LIMIT

According to FCC §15.407

The maximum conduced output power should not exceed:

Frequency Band(MHz)	Limit
5150~5250	250mW
5250~5350	250 mW or 11 dBm + 10 log B Note: The limit is the smaller of the two, "B" represents -26dB bandwidth.
5470~5725	250 mW or 11 dBm + 10 log B Note: The limit is the smaller of the two, "B" represents -26dB bandwidth.
5725~5850	1W

7.2 TEST PROCEDURE

· Method PM is Measurement using an RF average power meter. The procedure for this method is as follows:

a) Measurements may be performed using a wideband RF power meter with a thermocouple detector or equivalent if all of the following conditions are satisfied:

1) The EUT is configured to transmit continuously, or to transmit with a constant duty cycle.

2) At all times when the EUT is transmitting, it shall be transmitting at its maximum power control level.

3) The integration period of the power meter exceeds the repetition period of the transmitted signal by at least a factor of five.

b) If the transmitter does not transmit continuously, measure the duty cycle D of the transmitter output signal as described in 12.2.

c) Measure the average power of the transmitter. This measurement is an average over both the ON and OFF periods of the transmitter.

d) Adjust the measurement in dBm by adding [10 log (1 / D)], where D is the duty cycle {e.g., [10 log (1 / 0.25)], if the duty cycle is 25%}.

7.3 DEVIATION FROM STANDARD

No deviation.

7.4 TEST SETUP

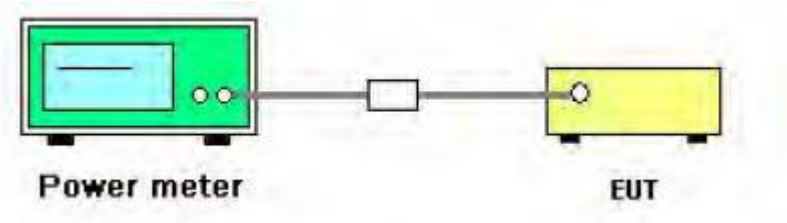

7.5 EUT OPERATION CONDITIONS

The EUT tested system was configured as the statements of 2.4 Unless otherwise a special operating condition is specified in the follows during the testing.

7.6 TEST RESULTS

EUT：	LCD Smart Projector	Model Name ：	XMM3106
Temperature：	26 ℃	Relative Humidity：	54%
Pressure：	1012 hPa	Test Voltage ：	DC 19V
Test Mode ：	TX (5G) Mode Frequency Band 1 (5150-5250MHz), Band 2A (5250-5350MHz) Band 2C, (5470-5725MHz), Band 3 (5725-5850MHz)		

Note: Band1&Band2A&Band2C&Band3 For 802.11n/ac 5GHz has MIMO mode.Directional gain=5.27dbi

5.27dbi < 6.0dbi so power limit don't need to change

Test data reference attachment.

8. OUT OF BAND EMISSIONS

8.1 APPLICABLE STANDARD

According to FCC §15.407(b)

Undesirable emission limits. Except as shown in paragraph (b)(7) of this section, the maximum emissions outside of the frequency bands of operation shall be attenuated in accordance with the following limits:

(1) For transmitters operating in the 5.15-5.25 GHz band: All emissions outside of the 5.15-5.35 GHz band shall not exceed an e.i.r.p. of −27 dBm/MHz.

(2) For transmitters operating in the 5.25-5.35 GHz band: All emissions outside of the 5.15-5.35 GHz band shall not exceed an e.i.r.p. of −27 dBm/MHz.

(3) For transmitters operating in the 5.47-5.725 GHz band: All emissions outside of the 5.47-5.725 GHz band shall not exceed an e.i.r.p. of −27 dBm/MHz.

(4) For transmitters operating in the 5.725-5.85 GHz band:
(i) All emissions shall be limited to a level of −27 dBm/MHz at 75 MHz or more above or below the band edge increasing linearly to 10 dBm/MHz at 25 MHz above or below the band edge, and from 25 MHz above or below the band edge increasing linearly to a level of 15.6 dBm/MHz at 5 MHz above or below the band edge, and from 5 MHz above or below the band edge increasing linearly to a level of 27 dBm/MHz at the band edge.

(ii) Devices certified before March 2, 2017 with antenna gain greater than 10 dBi may demonstrate compliance with the emission limits in §15.247(d), but manufacturing, marketing and importing of devices certified under this alternative must cease by March 2, 2018. Devices certified before March 2, 2018 with antenna gain of 10 dBi or less may demonstrate compliance with the emission limits in §15.247(d), but manufacturing, marketing and importing of devices certified under this alternative must cease before March 2, 2020.

8.2 TEST PROCEDURE

1. Check the calibration of the measuring instrument using either an internal calibrator or a known signal from an external generator.
2. Position the EUT without connection to measurement instrument. Turn on the EUT and connect its antenna terminal to measurement instrument via a low loss cable. Then set it to any one measured frequency within its operating range, and make sure the instrument is operated in its linear range.

3. Set RBW of spectrum analyzer to 1 MHz with a convenient frequency span.
4. Measure the highest amplitude appearing on spectral display and set it as a reference level. Plot the graph with marking the highest point and edge frequency.
5. Repeat above procedures until all measured frequencies were complete.

8.3 DEVIATION FROM STANDARD

No deviation.

8.4 TEST SETUP

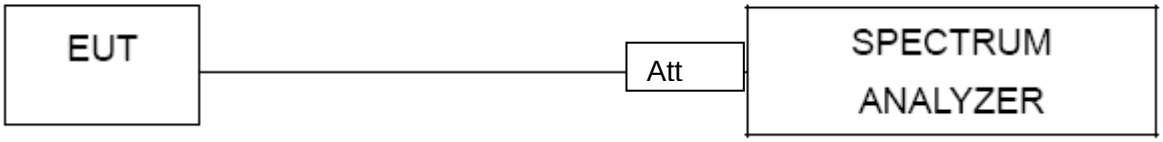

8.5 EUT OPERATION CONDITIONS

The EUT tested system was configured as the statements of 2.4 Unless otherwise a special operating condition is specified in the follows during the testing.

8.6 TEST RESULTS

EUT：	LCD Smart Projector	Model Name ：	XMM3106
Temperature：	26 ℃	Relative Humidity：	54%
Pressure：	1012 hPa	Test Voltage ：	DC 19V

Test data reference attachment.

9. Frequency Stability Measurement

9.1 LIMIT

Manufactures of U-NII devices are responsible for ensuring frequency stability such that an emission is maintained within the band of operation under all conditions of normal operation as specified in the user's manual.

9.2 TEST PROCEDURES

1. The transmitter output (antenna port) was connected to the spectrum analyzer.
2. EUT have transmitted absence of modulation signal and fixed channelize.
3. Set the spectrum analyzer span to view the entire absence of modulation emissions bandwidth.
4. Set RBW = 10 kHz, VBW = 10 kHz with peak detector and maxhold settings.
5. fc is declaring of channel frequency. Then the frequency error formula is (fc-f)/fc × 10_6 ppm and the limit is less than ±20ppm (IEEE 802.11nspecification).
6. The test extreme voltage is to change the primary supply voltage from 85 to 115 percent of the nominal value
7. Extreme temperature is -20°C~70°C.

9.3 TEST SETUP LAYOUT

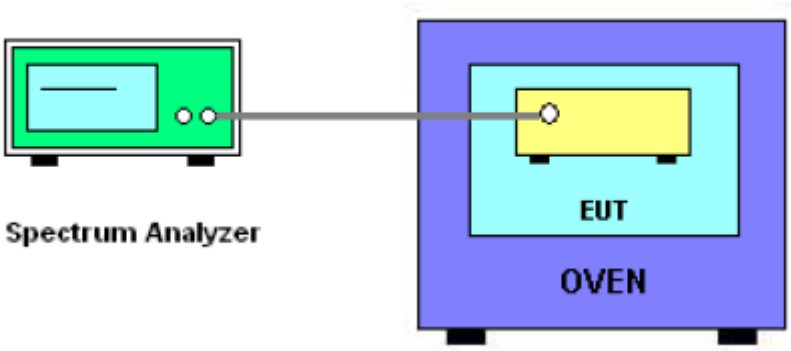

9.4 EUT OPERATION DURING TEST

1. The EUT was programmed to be in continuously un-modulation transmitting mode.
2. The module has two antennas, and the worst data is Antenna 1, only shown Antenna 1 Plot.

9.5 TEST RESULTS

EUT：	LCD Smart Projector	Model Name. ：	XMM3106
Temperature：	25 ℃	Relative Humidity：	56%
Pressure：	1012 hPa	Test Voltage ：	DC 19V
Test Mode ：	TX Frequency Band I (5150-5250MHz)		

Voltage vs. Frequency Stability

TEST CONDITIONS				Reference Frequency：5180MHz			
				f	fc	Max. Deviation (MHz)	Max. Deviation (ppm)
T nom (°C)	20	V nom (V)	19.00	5180.0002	5180	0.0002	0.0386
		V max (V)	20.90	5180.0016	5180	0.0016	0.3089
		V min (V)	17.10	5180.0014	5180	0.0014	0.2703
Limits				Within 5150-5250MHz			
Result				Complies			

Temperature vs. Frequency Stability

TEST CONDITIONS				Reference Frequency：5180MHz			
				f	fc	Max. Deviation (MHz)	Max. Deviation (ppm)
V nom (V)	19	T (°C)	-20	5180.0012	5180	0.0012	0.2317
		T (°C)	-10	5180.0009	5180	0.0009	0.1737
		T (°C)	0	5180.0001	5180	0.0001	0.0193
		T (°C)	10	5180.0018	5180	0.0018	0.3475
		T (°C)	20	5180.0014	5180	0.0014	0.2703
		T (°C)	30	5180.0015	5180	0.0015	0.2896
		T (°C)	40	5180.0011	5180	0.0011	0.2124
		T (°C)	50	5180.0009	5180	0.0009	0.1737
		T (°C)	60	5180.0014	5180	0.0014	0.2703
		T (°C)	70	5180.0019	5180	0.0019	0.3668
Limits				Within 5150-5250MHz			
Result				Complies			

Voltage vs. Frequency Stability

TEST CONDITIONS				Reference Frequency：5200MHz			
				f	fc	Max. Deviation (MHz)	Max. Deviation (ppm)
T nom (°C)	20	V nom (V)	19.00	5200.002	5200	0.0020	0.3846
		V max (V)	20.90	5200.006	5200	0.0060	1.1538
		V min (V)	17.10	5200.001	5200	0.0010	0.1923
Limits				Within 5150-5250MHz			
Result				Complies			

Temperature vs. Frequency Stability

TEST CONDITIONS				Reference Frequency：5200MHz			
				f	fc	Max. Deviation (MHz)	Max. Deviation (ppm)
V nom (V)	19	T (°C)	-20	5200.006	5200	0.0060	1.1538
		T (°C)	-10	5200.002	5200	0.0020	0.3846
		T (°C)	0	5200.0009	5200	0.0009	0.1731
		T (°C)	10	5200.0005	5200	0.0005	0.0962
		T (°C)	20	5200.0001	5200	0.0001	0.0192
		T (°C)	30	5200.0013	5200	0.0013	0.2500
		T (°C)	40	5200.0007	5200	0.0007	0.1346
		T (°C)	50	5200.0013	5200	0.0013	0.2500
		T (°C)	60	5200.0006	5200	0.0006	0.1154
		T (°C)	70	5200.0015	5200	0.0015	0.2885
Limits				Within 5150-5250MHz			
Result				Complies			

Voltage vs. Frequency Stability

TEST CONDITIONS				Reference Frequency：5240MHz			
				f	fc	Max. Deviation (MHz)	Max. Deviation (ppm)
T nom (°C)	20	V nom (V)	19.00	5240.0018	5240	0.0018	0.3435
		V max (V)	20.90	5240.0015	5240	0.0015	0.2863
		V min (V)	17.10	5240.0004	5240	0.0004	0.0763
Limits				Within 5150-5250MHz			
Result				Complies			

Temperature vs. Frequency Stability

TEST CONDITIONS				Reference Frequency：5240MHz			
				f	fc	Max. Deviation (MHz)	Max. Deviation (ppm)
V nom (V)	19	T (°C)	-20	5240.0009	5240	0.0009	0.1718
		T (°C)	-10	5240.0012	5240	0.0012	0.2290
		T (°C)	0	5240.0002	5240	0.0002	0.0382
		T (°C)	10	5240.0018	5240	0.0018	0.3435
		T (°C)	20	5240.0003	5240	0.0003	0.0573
		T (°C)	30	5240.0009	5240	0.0009	0.1718
		T (°C)	40	5240.0007	5240	0.0007	0.1336
		T (°C)	50	5240.0005	5240	0.0005	0.0954
		T (°C)	60	5240.0009	5240	0.0009	0.1718
		T (°C)	70	5240.0007	5240	0.0007	0.1336
Limits				Within 5150-5250MHz			
Result				Complies			

EUT：	LCD Smart Projector	Model Name. ：	XMM3106
Temperature：	25 ℃	Relative Humidity：	56%
Pressure：	1012 hPa	Test Voltage ：	DC 19V
Test Mode ：	TX Frequency Band 2A (5250-5350MHz)		

Voltage vs. Frequency Stability

TEST CONDITIONS				Reference Frequency：5260MHz			
				f	fc	Max. Deviation (MHz)	Max. Deviation (ppm)
T nom (°C)	20	V nom (V)	19.00	5260.0017	5260	0.0017	0.3232
		V max (V)	20.90	5260.0004	5260	0.0004	0.0760
		V min (V)	17.10	5260.0019	5260	0.0019	0.3612
Limits				Within 5250-5350MHz			
Result				Complies			

Temperature vs. Frequency Stability

TEST CONDITIONS				Reference Frequency：5260MHz			
				f	fc	Max. Deviation (MHz)	Max. Deviation (ppm)
V nom (V)	19	T (°C)	-20	5260.002	5260	0.0020	0.3802
		T (°C)	-10	5260.0007	5260	0.0007	0.1331
		T (°C)	0	5260.0017	5260	0.0017	0.3232
		T (°C)	10	5260.0018	5260	0.0018	0.3422
		T (°C)	20	5260.0003	5260	0.0003	0.0570
		T (°C)	30	5260.0002	5260	0.0002	0.0380
		T (°C)	40	5260.0013	5260	0.0013	0.2471
		T (°C)	50	5260.0012	5260	0.0012	0.2281
		T (°C)	60	5260.0003	5260	0.0003	0.0570
		T (°C)	70	5260.002	5260	0.0020	0.3802
Limits				Within 5250-5350MHz			
Result				Complies			

Voltage vs. Frequency Stability

TEST CONDITIONS				Reference Frequency：5280MHz			
				f	fc	Max. Deviation (MHz)	Max. Deviation (ppm)
T nom (°C)	20	V nom (V)	19.00	5280.0014	5280	0.00140	0.2652
		V max (V)	20.90	5280.0007	5280	0.00070	0.1326
		V min (V)	17.10	5280.001	5280	0.00100	0.1894
Limits				Within 5250-5350MHz			
Result				Complies			

Temperature vs. Frequency Stability

TEST CONDITIONS				Reference Frequency：5280MHz			
				f	fc	Max. Deviation (MHz)	Max. Deviation (ppm)
V nom (V)	19	T (°C)	-20	5280.0015	5280	0.0015	0.2841
		T (°C)	-10	5280.0016	5280	0.0016	0.3030
		T (°C)	0	5280.002	5280	0.0020	0.3788
		T (°C)	10	5280.0005	5280	0.0005	0.0947
		T (°C)	20	5280.0015	5280	0.0015	0.2841
		T (°C)	30	5280.0004	5280	0.0004	0.0758
		T (°C)	40	5280.0015	5280	0.0015	0.2841
		T (°C)	50	5280.0007	5280	0.0007	0.1326
		T (°C)	60	5280.0002	5280	0.0002	0.0379
		T (°C)	70	5280.0014	5280	0.0014	0.2652
Limits				Within 5250-5350MHz			
Result				Complies			

Voltage vs. Frequency Stability

TEST CONDITIONS				Reference Frequency：5320MHz			
				f	fc	Max. Deviation (MHz)	Max. Deviation (ppm)
T nom (°C)	20	V nom (V)	19.00	5320.0003	5320	0.0003	0.0564
		V max (V)	20.90	5320.0013	5320	0.0013	0.2444
		V min (V)	17.10	5320.0017	5320	0.0017	0.3195
Limits				Within 5250-5350MHz			
Result				Complies			

Temperature vs. Frequency Stability

TEST CONDITIONS				Reference Frequency：5320MHz			
				f	fc	Max. Deviation (MHz)	Max. Deviation (ppm)
V nom (V)	19	T (°C)	-20	5320.001	5320	0.0010	0.1880
		T (°C)	-10	5320.0009	5320	0.0009	0.1692
		T (°C)	0	5320.0016	5320	0.0016	0.3008
		T (°C)	10	5320.0011	5320	0.0011	0.2068
		T (°C)	20	5320.0014	5320	0.0014	0.2632
		T (°C)	30	5320.0001	5320	0.0001	0.0188
		T (°C)	40	5320.0005	5320	0.0005	0.0940
		T (°C)	50	5320.0015	5320	0.0015	0.2820
		T (°C)	60	5320.002	5320	0.0020	0.3759
		T (°C)	70	5320.0003	5320	0.0003	0.0564
Limits				Within 5250-5350MHz			
Result				Complies			

EUT：	LCD Smart Projector	Model Name. ：	XMM3106
Temperature：	25 ℃	Relative Humidity：	56%
Pressure：	1012 hPa	Test Voltage ：	DC 19V
Test Mode ：	TX Frequency Band 2C (5470-5725MHz)		

Voltage vs. Frequency Stability

TEST CONDITIONS				Reference Frequency：5500MHz			
				f	fc	Max. Deviation (MHz)	Max. Deviation (ppm)
T nom (°C)	20	V nom (V)	19.00	5500.0008	5500	0.0008	0.1455
		V max (V)	20.90	5500.0007	5500	0.0007	0.1273
		V min (V)	17.10	5500.0017	5500	0.0017	0.3091
Limits				Within 5470-5725MHz			
Result				Complies			

Temperature vs. Frequency Stability

TEST CONDITIONS				Reference Frequency：5500MHz			
				f	fc	Max. Deviation (MHz)	Max. Deviation (ppm)
V nom (V)	19	T (°C)	-20	5500.0019	5500	0.0019	0.3455
		T (°C)	-10	5500.0018	5500	0.0018	0.3273
		T (°C)	0	5500.0012	5500	0.0012	0.2182
		T (°C)	10	5500.0014	5500	0.0014	0.2545
		T (°C)	20	5500.0001	5500	0.0001	0.0182
		T (°C)	30	5500.0013	5500	0.0013	0.2364
		T (°C)	40	5500.0014	5500	0.0014	0.2545
		T (°C)	50	5500.0016	5500	0.0016	0.2909
		T (°C)	60	5500.0019	5500	0.0019	0.3455
		T (°C)	70	5500.0014	5500	0.0014	0.2545
Limits				Within 5470-5725MHz			
Result				Complies			

Voltage vs. Frequency Stability

TEST CONDITIONS				Reference Frequency：5600MHz			
				f	fc	Max. Deviation (MHz)	Max. Deviation (ppm)
T nom (°C)	20	V nom (V)	19.00	5600.0013	5600	0.0013	0.2321
		V max (V)	20.90	5600.0001	5600	0.0001	0.0179
		V min (V)	17.10	5600.0011	5600	0.0011	0.1964
Limits				Within 5470-5725MHz			
Result				Complies			

Temperature vs. Frequency Stability

TEST CONDITIONS				Reference Frequency：5600MHz			
				f	fc	Max. Deviation (MHz)	Max. Deviation (ppm)
V nom (V)	19	T (°C)	-20	5600.0018	5600	0.0018	0.3214
		T (°C)	-10	5600.0011	5600	0.0011	0.1964
		T (°C)	0	5600.0019	5600	0.0019	0.3393
		T (°C)	10	5600.0017	5600	0.0017	0.3036
		T (°C)	20	5600.001	5600	0.0010	0.1786
		T (°C)	30	5600.0017	5600	0.0017	0.3036
		T (°C)	40	5600.0015	5600	0.0015	0.2679
		T (°C)	50	5600.0003	5600	0.0003	0.0536
		T (°C)	60	5600.0005	5600	0.0005	0.0893
		T (°C)	70	5600.001	5600	0.0010	0.1786
Limits				Within 5470-5725MHz			
Result				Complies			

Voltage vs. Frequency Stability

TEST CONDITIONS				Reference Frequency：5700MHz			
				f	fc	Max. Deviation (MHz)	Max. Deviation (ppm)
T nom (°C)	20	V nom (V)	19.00	5700.0011	5700	0.0011	0.1930
		V max (V)	20.90	5700.0009	5700	0.0009	0.1579
		V min (V)	17.10	5700.0019	5700	0.0019	0.3333
Limits				Within 5470-5725MHz			
Result				Complies			

Temperature vs. Frequency Stability

TEST CONDITIONS				Reference Frequency：5700MHz			
				f	fc	Max. Deviation (MHz)	Max. Deviation (ppm)
V nom (V)	19	T (°C)	-20	5700.001	5700	0.0010	0.1754
		T (°C)	-10	5700.0015	5700	0.0015	0.2632
		T (°C)	0	5700.0019	5700	0.0019	0.3333
		T (°C)	10	5700.0007	5700	0.0007	0.1228
		T (°C)	20	5700.0006	5700	0.0006	0.1053
		T (°C)	30	5700.0014	5700	0.0014	0.2456
		T (°C)	40	5700.0012	5700	0.0012	0.2105
		T (°C)	50	5700.0006	5700	0.0006	0.1053
		T (°C)	60	5700.001	5700	0.0010	0.1754
		T (°C)	70	5700.0003	5700	0.0003	0.0526
Limits				Within 5470-5725MHz			
Result				Complies			

EUT：	LCD Smart Projector	Model Name. ：	XMM3106
Temperature：	25 ℃	Relative Humidity：	56%
Pressure：	1012 hPa	Test Voltage ：	DC 19V
Test Mode ：	TX Frequency(5745-5850MHz)		

Voltage vs. Frequency Stability

TEST CONDITIONS				Reference Frequency：5745MHz			
				f	fc	Max. Deviation (MHz)	Max. Deviation (ppm)
T nom (°C)	20	V nom (V)	19.00	5745.0012	5745	0.0012	0.2089
		V max (V)	20.90	5745.0019	5745	0.0019	0.3307
		V min (V)	17.10	5745.001	5745	0.0010	0.1741
Limits				Within 5745-5850MHz			
Result				Complies			

Temperature vs. Frequency Stability

TEST CONDITIONS				Reference Frequency：5745MHz			
				f	fc	Max. Deviation (MHz)	Max. Deviation (ppm)
V nom (V)	19	T (°C)	-20	5745.0012	5745	0.0012	0.2089
		T (°C)	-10	5745.0016	5745	0.0016	0.2785
		T (°C)	0	5745.0002	5745	0.0002	0.0348
		T (°C)	10	5745.0012	5745	0.0012	0.2089
		T (°C)	20	5745.0019	5745	0.0019	0.3307
		T (°C)	30	5745.0014	5745	0.0014	0.2437
		T (°C)	40	5745.0014	5745	0.0014	0.2437
		T (°C)	50	5745.0014	5745	0.0014	0.2437
		T (°C)	60	5745.0015	5745	0.0015	0.2611
		T (°C)	70	5745.0013	5745	0.0013	0.2263
Limits				Within 5745-5850MHz			
Result				Complies			

Voltage vs. Frequency Stability

TEST CONDITIONS				Reference Frequency：5785MHz			
				f	fc	Max. Deviation (MHz)	Max. Deviation (ppm)
T nom (°C)	20	V nom (V)	19.00	5785.0015	5785	0.00150	-0.2593
		V max (V)	20.90	5785.0001	5785	0.00010	-0.0173
		V min (V)	17.10	5785.0004	5785	0.00040	-0.0691
Limits				Within 5745-5850MHz			
Result				Complies			

Temperature vs. Frequency Stability

TEST CONDITIONS				Reference Frequency：5785MHz			
				f	fc	Max. Deviation (MHz)	Max. Deviation (ppm)
V nom (V)	19	T (°C)	-20	5785.0002	5785	0.0002	0.0346
		T (°C)	-10	5785.0001	5785	0.0001	0.0173
		T (°C)	0	5785.001	5785	0.0010	0.1729
		T (°C)	10	5785.0019	5785	0.0019	0.3284
		T (°C)	20	5785.0013	5785	0.0013	0.2247
		T (°C)	30	5785.0003	5785	0.0003	0.0519
		T (°C)	40	5785.0009	5785	0.0009	0.1556
		T (°C)	50	5785.0001	5785	0.0001	0.0173
		T (°C)	60	5785.0011	5785	0.0011	0.1901
		T (°C)	70	5785.0016	5785	0.0016	0.2766
Limits				Within 5745-5850MHz			
Result				Complies			

Voltage vs. Frequency Stability

TEST CONDITIONS				Reference Frequency：5825MHz			
				f	fc	Max. Deviation (MHz)	Max. Deviation (ppm)
T nom (°C)	20	V nom (V)	19.00	5825.0001	5825	0.0001	0.0172
		V max (V)	20.90	5825.0019	5825	0.0019	0.3262
		V min (V)	17.10	5825.0014	5825	0.0014	0.2403
Limits				Within 5745-5850MHz			
Result				Complies			

Temperature vs. Frequency Stability

TEST CONDITIONS				Reference Frequency：5825MHz			
				f	fc	Max. Deviation (MHz)	Max. Deviation (ppm)
V nom (V)	19	T (°C)	-20	5825.0002	5825	0.0002	0.0343
		T (°C)	-10	5825.0011	5825	0.0011	0.1888
		T (°C)	0	5825.0017	5825	0.0017	0.2918
		T (°C)	10	5825.0005	5825	0.0005	0.0858
		T (°C)	20	5825.0014	5825	0.0014	0.2403
		T (°C)	30	5825.0017	5825	0.0017	0.2918
		T (°C)	40	5825.002	5825	0.0020	0.3433
		T (°C)	50	5825.0018	5825	0.0018	0.3090
		T (°C)	60	5825.0017	5825	0.0017	0.2918
		T (°C)	70	5825.0003	5825	0.0003	0.0515
Limits				Within 5745-5850MHz			
Result				Complies			

10. DYNAMIC FREQUENCY SELECTION(DFS)

10.1 APPLICABILITY OF DFS REQUIREMENTS

EUT is client and operates as client without radar detection function.

Table 1: Applicability of DFS Requirements Prior to Use of a Channel

Requirement	Operational Mode		
	Master	Client Without Radar Detection	Client With Radar Detection
Non-Occupancy Period	Yes	Not required	Yes
DFS Detection Threshold	Yes	Not required	Yes
Channel Availability Check Time	Yes	Not required	Not required
U-NII Detection Bandwidth	Yes	Not required	Yes

Table 2: Applicability of DFS requirements during normal operation

Requirement	Operational Mode		
	Master	Client Without Radar Detection	Client With Radar Detection
DFS Detection Threshold	Yes	Not required	Yes
Channel Closing Transmission Time	Yes	Yes	Yes
Channel Move Time	Yes	Yes	Yes
U-NII Detection Bandwidth	Yes	Not required	Yes
Client Beacon Test	N/A	Yes	Yes

Additional requirements for devices with multiple bandwidth modes	Operational Mode	
	Master or Client With Radar Detection	Client Without Radar Detection
U-NII Detection Bandwidth and Statistical Performance Check	All BW modes must be tested	Not required
Channel Move Time and Channel Closing Transmission Time	Test using widest BW mode available	Test using the widest BW mode available for the link
All other tests	Any single BW mode	Not required

Note
Frequencies selected for statistical performance check (Section 7.8.4) should include several frequencies within the radar detection bandwidth and frequencies near the edge of the radar detection bandwidth. For 802.11 devices it is suggested to select frequencies in each of the bonded 20 MHz channels and the channel center frequency.

10.2 INTERFERENCE THRESHOLD VALUES, MASTER OR CLIENT INCORPORATING IN-SERVICE MONITORING

Maximum Transmit Power	Value (see notes 1, 2, and 3)
EIRP ≥ 200 milliwatt	-64 dBm
EIRP < 200 milliwatt and power spectral density < 10 dBm/MHz	-62 dBm
EIRP < 200 milliwatt that do not meet the power spectral density requirement	-64 dBm

Note 1: This is the level at the input of the receiver assuming a 0 dBi receive antenna.
Note 2: Throughout these test procedures an additional 1 dB has been added to the amplitude of the test transmission waveforms to account for variations in measurement equipment. This will ensure that the test signal is at or above the detection threshold level to trigger a DFS response.
Note 3: EIRP is based on the highest antenna gain.

10.3 DFS RESPONSE REQUIREMENT VALUES

Parameter	Value
Non-occupancy period	Minimum 30 minutes
Channel Availability Check Time	60 seconds
Channel Move Time	10 seconds See Note 1.
Channel Closing Transmission Time	200 milliseconds + an aggregate of 60 milliseconds over remaining 10 second period. See Notes 1 and 2.
U-NII Detection Bandwidth	Minimum 100% of the 99% power bandwidth See Note 3.

Note 1: The instant that the Channel Move Time and the Channel Closing Transmission Time begins is as follows:
• For the Short pulse radar Test Signals this instant is the end of the Burst.
• For the Frequency Hopping radar Test Signal, this instant is the end of the last radar Burst generated.
• For the Long Pulse radar Test Signal this instant is the end of the 12 second period defining the radar transmission.
Note 2: The Channel Closing Transmission Time is comprised of 200 milliseconds starting at the beginning of the Channel Move Time plus any additional intermittent control signals required to facilitate Channel changes (an aggregate of 60 milliseconds) during the remainder of the 10 second period. The aggregate duration of control signals will not count quiet periods in between transmissions.
Note 3: During the U-NII Detection Bandwidth detection test, radar type 0 is used and for each frequency step the minimum percentage of detection is 90%. Measurements are performed with no data traffic.

10.4 SHORT PULSE RADAR TEST WAVEFORMS

As the EUT is a Client Device with no Radar Detection, only one type radar pulse is required for the testing. Radar Pulse type 0 was used in the evaluation of the Client device for the purpose of measuring the Channel Move Time and the Channel Closing Transmission Time.

Radar Type	Pulse Width (μsec)	PRI (μsec)	Number of Pulses	Minimum Percentage of Successful Detection	Minimum Trials
0	1	1428	18	60%	30
1	1	Test A Test B	$\mathrm{Roundup}\left\{\left(\frac{1}{360}\right)\cdot\left(\frac{19\cdot10^6}{\mathrm{PRI}_{\mu sec}}\right)\right\}$	60%	30
2	1-5	150-230	23-29	60%	30
3	6-10	200-500	16-18	60%	30
4	11-20	200-500	12-16	60%	30
Aggregate (Radar Types 1-4)				80%	120

Test A: 15 unique PRI values randomly selected from the list of 23 PRI values in Table 5a
Test B: 15 unique PRI values randomly selected within the range of 518-3066 μsec, with a minimum increment of 1 μsec, excluding PRI values selected in Test A

A minimum of 30 unique waveforms are required for each of the short pulse radar types 2 through 4. For short pulse radar type 1, the same waveform is used a minimum of 30 times. If more than 30 waveforms are used for short pulse radar types 2 through 4, then each additional waveform must also be unique and not repeated from the previous waveforms.
If more than 30 waveforms are used for Short Pulse Radar Type 1, then each additional waveform is generated with Test B and must also be unique and not repeated from the previous waveforms in Tests A or B. The aggregate is the average of the percentage of successful detections of short pulse radar types 1-4.

10.5 CALIBRATION SETUP AND DFS TEST RESULTS

Radar Waveform Calibration Procedure

1) A 50 ohm load is connected in place of the spectrum analyzer, and the spectrum analyzer is connected to place of the master

2) The interference Radar Detection Threshold Level is -62dBm+3.69dBi= -58.31dBm that had been taken into account the output power range and antenna gain.

3) The following equipment setup was used to calibrate the conducted radar waveform. A vector signal generator was utilized to establish the test signal level for radar type 0. During this process there were no transmissions by either the master or client device. The spectrum analyzer was switched to the zero spans (time domain) at the frequency of the radar waveform generator. Peak detection was used. The spectrum analyzer resolution bandwidth (RBW) and video bandwidth (VBW) were set to 3 MHz. The spectrum analyzer had offset -1.0dB to compensate RF cable loss 1.0dB.

4) The vector signal generator amplitude was set so that the power level measured at the spectrum analyzer was -62dBm+3.69dBi+1dB =-57.31dBm. Capture the spectrum analyzer plots on short pulse radar waveform.

10.6 CONDUCTED CALIBRATION SETUP

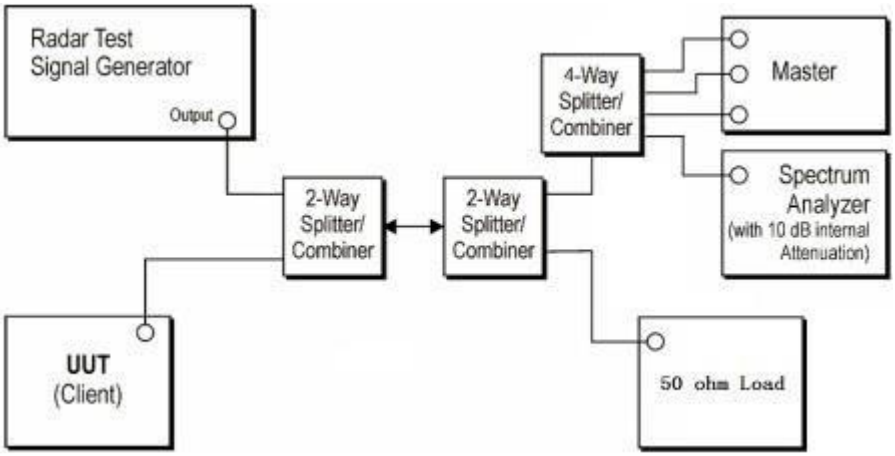

Wireless AP	Manufacturer	ASUSTek Computer Inc
	Model NO.	AX5400
	FCC ID	MSQ-RTAXJ300

Note:1. The Slave device associated with the EUT during these tests does not have radar detection capability.

2. WLAN traffic is generated by using the iperf software to send packets from the Master IP address to the Slave IP address.

3. The time required for the master and slave devices to fully start up is 120s.

4. EUT does not support TPC.

10.7 RADAR WAVEFORM CALIBRATION RESULT

Test data reference attachment.

10.8 IN-SERVICE MONITORING: CHANNEL MOVE TIME, CHANNEL CLOSING TRANSMISSION TIME AND NON-OCCUPANCY PERIOD

TEST CONFIGURATION:

Setup for Client with injection at the Master

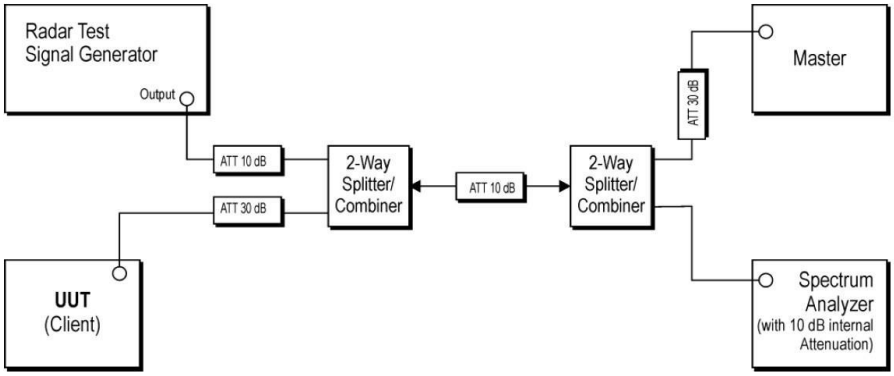

TEST PROCEDURE:

1. The radar pulse generator is setup to provide a pulse at frequency that the master and client are operating. A type 0 radar pulse with a 1us pulse width and a 1428us PRI is used for the testing.
2. The vector signal generator is adjusted to provide the radar burst (18 pulses) at the level of approximately -61dBm at the antenna port of the master device
3. A trigger is provided from the pulse generator to the DFS monitoring system in order to capture the traffic and the occurrence of the radar pulse.
4. EUT will associate with the master at channel. The file “iperf.exe” specified by the FCC is Streamed from the PC 2 through the master and the client device to the PC 1 and played in full motion video using Media Player Classic Ver. 6.4.8.6 in order to properly load the network for the entire period of the test.
5. When radar burst with a level equal to the DFS Detection Threshold +1dB is generated on the operating channel of the U-NII device. At time T0 the radar waveform generator sends a burst of pulse of the radar waveform at Detection Threshold +1dB.
6. Observe the transmissions of the EUT at the end of the radar Burst on the Operating Channel Measure and record the transmissions from the UUT during the observation time (Channel Move Time). One 15 seconds plot is reported for the Short Pulse Radar Type 0. The plot for the Short Pulse Radar Types start at the end of the radar burst. The Channel Move Time will be calculated based on the zoom In 600ms plot of the Short Pulse Radar Type
7. Measurement of the aggregate duration of the Channel Closed Transmission Time method. With the spectrum analyzer set to zero span tuned to the center frequency of the EUT operating channel at the radar simulated frequency, peak detection, and max hold, the dwell time per bin is given by: Dwell (0.3ms) =S (12000ms) / B (4000); where Dwell is the dwell time per spectrum analyzer sampling bin, S is sweep time and B is the number of spectrum analyzer sampling bins. An upper bound of the aggregate duration of the intermittent control signals of Channel Closing Transmission Time is calculated by: C (ms)= N X Dwell (0.3ms); where C is the Closing Time, N is the number of spectrum analyzer sampling bins (intermittent control signals) showing a U-NII transmission and Dwell is the dwell time per bin.
8. Measurement the EUT for more than 30 minutes following the channel move time to verify that no transmission or beacons occur on this channel.

TEST MODE:

Mode	Frequency (MHz)
ac80	5290
ac80	5530
n40	5310
n40	5510
a	5320
a	5500

10.9 RESULT OF CHANNEL MOVE TIME, CHANNEL CLOSING TRANSMISSION TIME AND NON-OCCUPANCY PERIOD FOR CLIENT BEACON TEST

Test data reference attachment.

11. ANTENNA REQUIREMENT

11.1 STANDARD REQUIREMENT

15.203 requirement: For intentional device, according to 15.203: an intentional radiator shall be designed to ensure that no antenna other than that furnished by the responsible party shall be used with the device.

11.2 EUT ANTENNA

The EUT antenna is FPC Antenna. It comply with the standard requirement.

END OF REPORT