# TONOR

WIRELESS MICROPHONE Instruction Manual

## TW3B

RoHS

# ABOUT THIS MANUAL

Thank you for purchasing TONOR wireless microphone. This manual is intended to help you understand all about this microphone and how to use it. TONOR always strives for the ultimate user experience. All our knowledge and passion for audio technology are incorporated into building microphones with high performance for you. The TONOR microphone is high quality and easy to use to achieve the best user experience.

Enjoy your microphone!

TONOR Team

## Package Including

TW3B

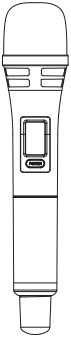

## OPERATING ENVIRONMENTS & NOTES

When using this device, keep it away from water.

Use the device in ventilated environment, keep it away from fire.

Since it's a wireless device, please keep it away from other interfering sources.

Don't take apart the device.

Please use the standard power supply, high voltage may damage the device.

Please place the used batteries into the recycle bin, don't litter them.

## SPECIFICATIONS

Frequency Response: 40Hz-18Khz
Operating Frequency: B/915.6 MHz -926.8 MHz
B: 915.6 MHz 916.4 MHz 917.2 MHz 918.0 MHz 918.8 MHz 919.6 MHz 920.4 MHz
921.2 MHz 922.0 MHz 922.8 MHz 923.6 MHz 924.4 MHz 925.2 MHz 926.0 MHz 926.8 MHz
Operating Range: Up to 60m
Frequency Stability: ±10ppm
SNR: ≥90dB
Sound Distortion: ≤0.5%
Mic Input Sensitivity: -52dB±3dB(0dB=1v/μ bar at 1KHz)
RF Sensitivity: -95dBm
Operating Temperature: 0˚C to +55˚C

# MICROPHONE OPERATION INSTRUCTION

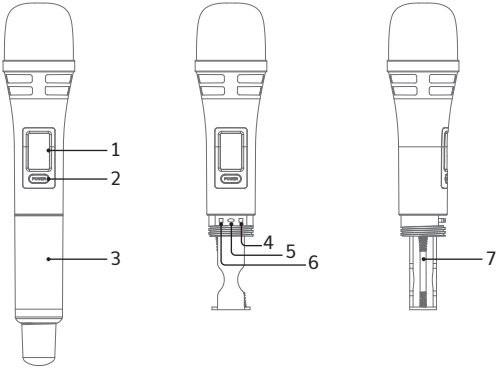


As shown in above pictures:

1. Display Screen
2. On/Off Switch
3. Tail Tube
4. Volume +
5. Setting Button
6. Volume -
7. Battery Compartment

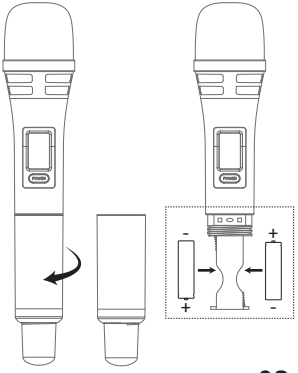


Install 2*AA batteries before using the wireless microphone and installing instruction is as follows:

1. Take down the tail tube of mic.
2. Install the batteries and tighten tail tube of mic.

Note: The positive and negative polarity of battery cannot be reversed.

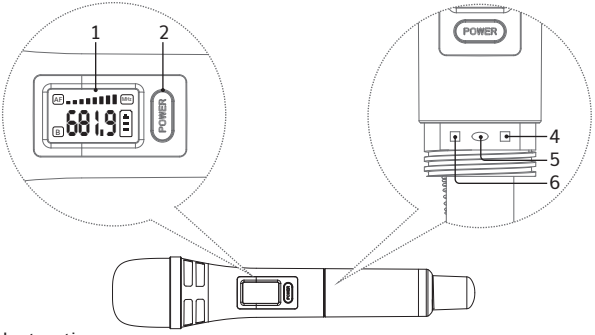


Instruction:
- Press button 2 for 2s to turn it on/off.
- Press the button 5, then the frequency on the screen will be changed.
- Press button 4 or 6 to adjust volume.

## WARRANTY

TONOR provides 2 years of after-sales service, free replacement to products that are NOT damaged resulting from accident, alteration, misuse, negligence, or abuse. If exceeding 30 days of Amazon return policy, you can still contact us through our Shopify TONORMIC. We will serve you with full sincerity!

US CA MX

FCC STATEMENT: This device complies with Part 15 of the FCC Rules. Operation is subject to the following two conditions: (1) this device may not cause harmful interference, and (2) this device must accept any interference received, including interference that may cause undesired operation.

FR

DÉCLARATION FCC: Cet appareil est conforme à la partie 15 de la réglementation du FCC. Son fonctionnement est soumis aux deux conditions suivantes: (1) cet appareil ne doit pas provoquer 'interférences nuisibles, et (2) cet appareil doit accepter toute interférence reçue, y compris les interférences pouvant entraîner un fonctionnement indésirable.

ES

DECLARACIÓN DE LA FCC: Este depositivo cumple con la Parte 15 de las Reglas de la FCC. La operación está sujeta a las siguientes dos condiciones: (1) el depositivo no debe causar interferencias perjudiciales, y (2) el depositivo debe aceptar cualquier interferencia recibida, incluida interferencia que pueda causar operación no deseado.

Vous êtes responsable de remettre tous les appareils électriques et électroniques usagés à des points de collecte correspondants.

Pour en savoir plus: www.quefairedemesdechets.fr

FR

**Les piles et batteries se recyclent**

À DÉPOSER EN MAGASIN OU À DÉPOSER EN DÉCHÈTTERIE

Points de collecte sur www.quefairedemesdechets.fr

EASTWEST ELECTRONIC COMMERCE CO., LIMITED | LEVEL 54 HOPEWELL CENTRE 183 QUEEN'S ROAD EAST HONG KONG

EASTWEST ELECTRONIC COMMERCE CO US LIMITED | 3500 SOUTH DUPONT HIGHWAY, SUITE G106 DOVER, DE 19901 UNITED STATES

LIFEWIT LIMITED | FLAT 237, 233 HIGH STREET CROYDON SURREY ENGLAND CR0 1FY UNITED KINGDOM

Lifewit GmbH | Friedenstraße 5 97072 Wuerzburg Germany

**https://www.tonormic.com**

**support@tonormic.com**

**MADE IN CHINA**

FCC Warnning:

This equipment has been tested and found to comply with the limits for a Class B digital device, pursuant to part 15 of the FCC Rules. These limits are designed to provide reasonable protection againstharmful interference in a residential installation. This equipment generates, uses and can radiateradio frequency energy and, if not installed and used in accordance with the instructions, maycause harmful interference to radio communications. However, there is no guarantee thatinterference will not occur in a particular installation. If this equipment does cause harmfulinterference to radio or television reception, which can be determined by turning the equipmentoff and on, the user is encouraged to try to correct the interference by one or more of thefollowing measures:

- Reorient or relocate the receiving antenna.
- Increase the separation between the equipment and receiver.
- Connect the equipment into an outlet on a circuit different from that to which the receiver is connected.
- Consult the dealer or an experienced radio/TV technician for help.

Caution: Any changes or modifications to this device not explicitly approved by manufacturer could void your authority to operate this equipment.

This device complies with part 15 of the FCC Rules. Operation is subject to the following two conditions:

(1)This device may not cause harmful interference, and (2) this device must accept any interference received, including interference that may cause undesired operation.

This equipment complies with FCC radiation exposure limits set forth for an uncontrolled environment. This equipment should be installed and operated with minimum distance 0cm between the radiator and your body.

## ISED Statement

- English: This device complies with Industry Canada license-exempt RSS standard(s). Operation is subject to the following two conditions: (1) This device may not cause interference, a nd (2) This device must accept any interference, including interference that may cause undesired operation of the device.

The digital apparatus complies with Canadian CAN ICES-3 (B)/NMB-3(B).

- French: Le présentappareilestconforme aux CNR d'Industrie Canada applicables aux appareils radio exempts de licence. L'exploitationestautorisée aux deux conditions suivantes: (1) l'appareil ne doit pas produire de brouillage, et (2) l'utilisateur de l'appareildoit accepter tout brouillageradi oélectriquesubi, mêmesi le brouillageest susceptible d'encompromettre le fonctionnement.

l'appareil numérique du ciem conforme canadien peut - 3 (b) / nmb - 3 (b).

This device meets the exemption from the routine evaluation limits in section 2.5 of RSS 102 and compliance with RSS 102 RF exposure, users can obtain Canadian information on RF exposure and compliance.

cet appareil est conforme à l'exemption des limites d'évaluation courante dans la section 2.5 du cnr - 102 et conformité avec rss 102 de l'exposition aux rf, les utilisateurs peuvent obtenir des données canadiennes sur l'exposition aux champs rf et la conformité.

This equipment complies with Canada radiation exposure limits set forth for an uncontrolled environment.

This equipment should be installed and operated with minimum distance 0cm between the radiator & your body.

Cet équipement est conforme Canada limites d'exposition aux radiations dans un environnement non contrôlé.

Cet équipement doit être installé et utilisé avec une distance minimale de 0 cm entre le radiateur et votre corps.