TONOR

Instruction Manual

TW380

UHF Wireless Microphone

ABOUT THIS MANUAL

Thank you for purchasing TONOR wireless microphone. This manual is intended to help you understand all about this microphone and how to use it. TONOR always strives for the ultimate user experience. All our knowledge and passion for audio technology are incorporated into building microphones with high performance for you. The TONOR microphone is high quality and easy to use to achieve the best user experience.

Enjoy your microphone!

TONOR Team

PACKAGE INCLUDING

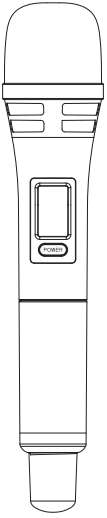

OPERATING ENVIRONMENTS & NOTES

When using this device, keep it away from water.

Use the device in ventilated environment, keep it away from fire.

Since it's a wireless device, please keep it away from other interfering sources.

Don't take apart the device.

Please use the standard power supply, high voltage may damage the device.

Please place the used batteries into the recycle bin, don't litter them.

SPECIFICATIONS

Frequency Response: 40hz-18khz
Maximum Radio-frequency Power Transmitted: 12.0 dBm
Operating Frequency: A MIC: 538.2-544.8MHz, B MIC: 545.4-552MHz, C MIC: 553.8-560.4MHz, D MIC: 561-567.6MHz, E MIC: 569.4-576MHz, F MIC: 576.6-583.2MHz, G MIC: 585-591.6MHz, H MIC: 592.2-598.8MHz
Operating Range: Up to 90m
Frequency Stability: ±10ppm
SNR: 96dB
Sound Distortion: 0.03%
Handheld Mic Input Sensitivity: -52dB±3dB
Bodypack Input Sensitivity: -40dB±3dB
RF Sensitivity: -95dBm
Operating Temperature: 0˚C to +55˚C

MICROPHONE OPERATION INSTRUCTION

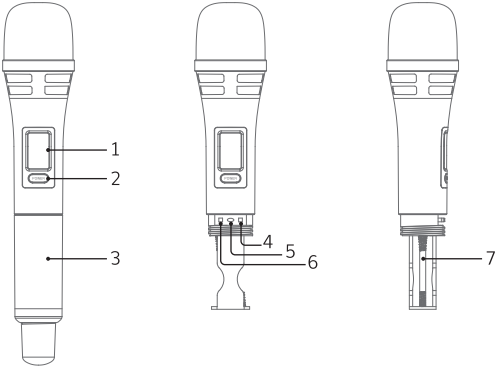

As shown in above pictures:

1. Display Screen

2. Power Button
- Click to turn on the mic. Long press for 2 seconds to turn off.

3. Tail Tube

4. Volume +
- Click to increase the volume, up to 15 levels.

5. Setting Button
- Click to change the frequency. When the microphone is on, long press for 5 seconds into pairing mode.

6. Volume -
- Click to decrease the volume, down to 0 level.

7. Battery Compartment

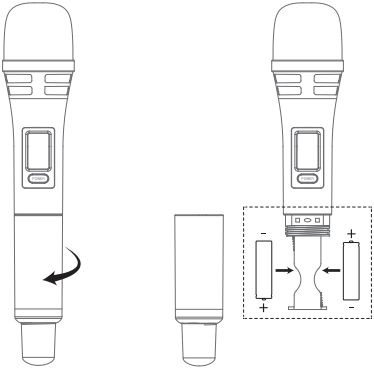

Install 2*AA batteries before using the wireless microphone and installing instruction is as follows:

1. Take down the tail tube of mic.
2. Install the batteries and tighten tail tube of mic.

Note: The positive and negative polarity of battery cannot be reversed.

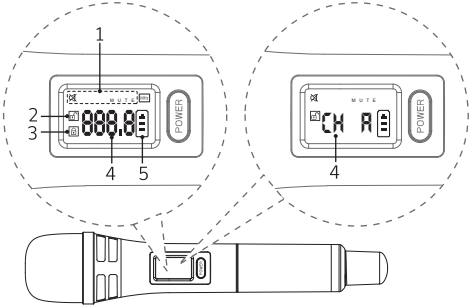

Click power button to turn on the mic. Display Screen Instruction:
1. Microphone mute indicator
- Click the power button to turn on the mute, and MUTE lights up. Click the power button again to turn off the mute, and MUTE goes out.
2. Unlocked indicator
- When the hand microphone is turned on, " " appears, which means that the microphone and receiver are not locked. Unlocking does not affect normal use. But there will be interruption when multiple sets are used. Re-pairing is required to lock the hand microphone and receiver to avoid mutual interference during use.
3. Locked indicator
- When the hand microphone is turned on, " " appears, indicating that the hand microphone and receiver are locked. When multiple sets are used, they will not interfere with each other.
4. Microphone frequency/number display
- The default frequency is displayed when the microphone is turned on. After 10 seconds, it switches to the corresponding microphone number CH A-CH F.
5. Microphone power display

TROUBLESHOOTING

-Turn on all the microphones or bodypacks, but one of them has on sound.
Reconnect the microphone or bodypack and receiver.

- Received signal with noise or interference
Change to other channels;
Check if receiving distance exceeds the maximum range.

- Microphone cannot be tumed on
Check if batteries are installed reversely;
Change to new batteries.

- The microphone number is repeated and cannot be used normally.
For handheld mic: Turn off the microphone with the problem. Then press and hold the power button for about 10 seconds, waiting for the screen to display "CH x" and then release the button. Click "+-" button to select A/B/C/D/E/F/G/H. Then short press the SET button to confirm the number and exit.
For bodypack: Turn off the bodypack with the problem. Long press the SET button and wait for the screen to display "CH-x" and then release the button. Short press the MUTE/VOL button to select A/B/C/D/E/F/G/H. Then short press the SET button to confirm the number and exit.

- Multiple sets used together.
Each set of products need to repaired according to "STEPS TO PAIR".
All are turned on, and press the SET button on the microphone to set all microphone frequencies to unique frequencies.

Conditions and restrictions for using frequencies

There may be special conditions and restrictions for using frequencies in your country.
Before putting the product into operation, find the information for your country at the following address:
https://www.tonormic.com/pages/permitted-frequency-bands

WARRANTY

TONOR provides 2 years of after-sales service, free replacement to products that are NOT damaged resulting from accident, alteration, misuse, negligence, or abuse. If exceeding 30 days of Amazon return policy, you can still contact us through our Shopify TONORMIC. We will serve you with full sincerity!

TW380 / TW388 FREQUENCY LIST							
CHA	CHB	CHC	CHD	CHE	CHF	CHG	CHH
538.2	545.4	553.8	561	569.4	576.6	585	592.2
538.8	546	554.4	561.6	570	577.2	585.6	592.8
539.4	546.6	555	562.2	570.6	577.8	586.2	593.4
540	547.2	555.6	562.8	571.2	578.4	586.8	594
540.6	547.8	556.2	563.4	571.8	579	587.4	594.6
541.2	548.4	556.8	564	572.4	579.6	588	595.2
541.8	549	557.4	564.6	573	580.2	588.6	595.8
542.4	549.6	558	565.2	573.6	580.8	589.2	596.4
543	550.2	558.6	565.8	574.2	581.4	589.8	597
543.6	550.8	559.2	566.4	574.8	582	590.4	597.6
544.2	551.4	559.8	567	575.4	582.6	591	598.2
544.8	552	560.4	567.6	576	583.2	591.6	598.8

	AT	BE	BG	CY	CZ	DE
	DK	EE	EL	ES	FI	FR
	HR	HU	IE	IT	LT	LU
	LV	MT	NL	PL	PT	RO
	SE	SI	SK	UK(NI)		

FCC Warning

This device complies with part 15 of the FCC rules. Operation is subject to the following two conditions: (1) this device may not cause harmful interference, and (2) this device must accept any inte rference received, including interference that may cause undesired operation.

Changes or modifications not expressly approved by the party responsible for compliance could void the user's authority to operate the equipment.

NOTE: This equipment has been tested and found to comply with the limits for a Class B digital device, pursuant to part 15 of the FCC Rules. These limits are designed to provide reasonable protection against harmful interference in a residential installation. This equipment generates uses and can radiate radio frequency energy and, if not installed and used in accordance with the instructions, may cause harmful interference to radio communications. However, there is no guarantee that interference will not occur in a particular installation. If this equipment does cause harmful interferenceto radio or television reception, which can be determined by turning the equipment off and on, the user is encouraged to try to correct the interference by one or more of the following measures:

- Reorient or relocate the receiving antenna.
- Increase the separation between the equipment and receiver.
- Connect the equipment into an outlet on a circuit different from that to which the receiver is connected.
- Consult the dealer or an experienced radio/TV technician for help.

Radiation Exposure Statement

The device has been evaluated to meet general RF exposure requirement. The device can be used in portable exposure condition without restriction.

www.tonormic.com
support@tonormic.com

MANUFACTURER: EASTWEST ELECTRONIC COMMERCE CO., LIMITED
ADDRESS: 6/F MANULIFE PLACE 348 KWUN TONG ROAD KL

US-REP: EASTWEST ELECTRONIC COMMERCE CO US LIMITED
ADDRESS: 3500 SOUTH DUPONT HIGHWAY, SUITE G106 DOVER, DE 19901 UNITE STATES

MADE IN CHINA