TONOR

UHF Wireless Microphone Instruction Manual

TW750

UK CA CE FC RoHS

ABOUT THIS MANUAL

Thank you for purchasing TONOR wireless microphone. This manual is intended to help you understand all about this microphone and how to use it. TONOR always strives for the ultimate user experience. All our knowledge and passion for audio technology are incorporated into building microphones with high performance for you. The TONOR microphone is high quality and easy to use to achieve the best user experience.

Enjoy your microphone!

TONOR Team

Package Including

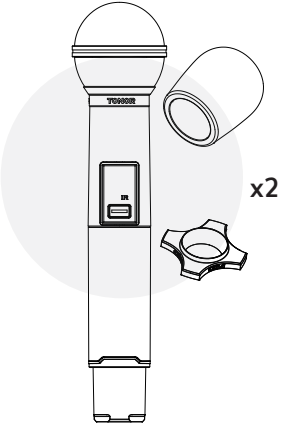

English

OPERATING ENVIRONMENTS & NOTES

- When using this device, keep it away from water.
- Use the device in ventilated environment, keep it away from fire.
- Since it's a wireless device, please keep it away from other interfering sources.
- Don't take apart the device.
- Please use the standard power supply, high voltage may damage the device.
- When the battery is low, the mic or receiver will automatically shut down. Please charge it.
- Recommended to use the original charging cable for all charging equipment. Or use a Type-A to Type-C charging cable.
- Not recommended to use equipment while charging.

SPECIFICATIONS

1. Frequency range: 530-595MHz
2. Channels: 100ch/each channel
3. RF power: 10dBm
4. Frequency response: 50Hz-18kHz
5. T.H.D: ≤0.5%
6. Mic Battery: Lithium battery 3.7V/1200mAh
7. Mic Charging Time: 2-3 hours
8. Mic Battery Life: 7-9 hours
9. Receiver powered: DC 13.5V, 800mA
10. Working distance: Up to 100m

MICROPHONE OPERATION INSTRUCTION

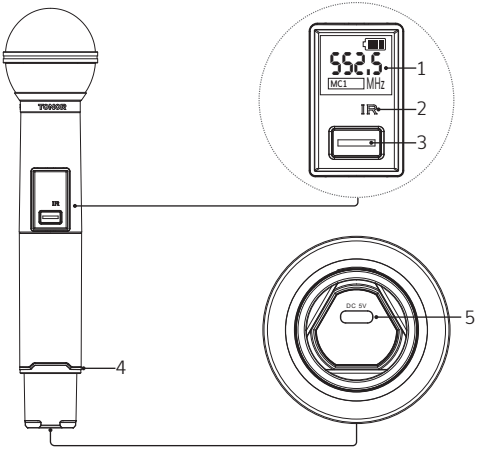

1. LCD Display
2. IR Infrared Pairing Window
3. Power Switch with LED Indicator
- Click to turn on. Long press for 2 seconds to turn off.
- Click to be mute when it is power on. And the LED light is red.
4. LED Indicator
- Power on state: Blue light means power on. Light off means mute.
- Power off state: Red light means charging and light off when completed.
- Power on state: Purple light means charging and red light means mute.
5. TYPE-C Charging Interface

EU Declaration of conformity
• RoHS Directive (2011/65/EU)

Hereby, Fujian EastWest Lifewit Technology Co.,LTD declares that the radio equipment type TW750 is in compliance with Directive 2014/53/EU.
The full text of the EU declaration of conformity is available at the following internet address:
https://www.tonormic.com/pages/eu-declaration-of-conformity

Conditions and restrictions for using frequencies

Conditions and restrictions for using frequencies
There may be special conditions and restrictions for using frequencies in your country.
Before putting the product into operation, find the information for your country at the following address:
https://www.tonormic.com/pages/permitted-frequency-bands

WARRANTY

TONOR provides 2 years of after-sales service, free replacement to products that are NOT damaged resulting from accident, alteration, misuse, negligence, or abuse. If exceeding 30 days of Amazon return policy, you can still contact us through our Shopify TONOR-MIC. We will serve you with full sincerity!

FCC Statement

US MX

This device complies with part 15 of the FCC Rules. Operation is subject to the following two conditions:
(1)This device may not cause harmful interference.
(2)This device must accept any interference received, including interference that may cause undesired operation.

ISED Statement

CA

This device contains licence-exempt transmitter(s)/receiver(s) that comply with Innovation, Science and Economic Development Canada's licence-exempt RSS(s). Operation is subject to the following two conditions:
(1) This device may not cause interference.
(2) This device must accept any interference, including interference that may cause undesired operation of the device.

FR

L'émetteur/récepteur exempt de licence contenu dans le présent appareil est conforme aux CNR d'Innovation, Sciences et Développement économique Canada applicables aux appareils radio exempts de licence. L'exploitation est autorisée aux deux conditions suivantes:
(1) L' appareil ne doit pas produire de brouillage;
(2) L' appareil doit accepter tout brouillage radioélectrique subi, même si le brouillage est susceptible d' en compromettre le fonctionnement.

Changes or modifications not expressly approved by the party responsible for compliance could void the user's authority to operate the equipment.

NOTE: This equipment has been tested and found to comply with the limits for a Class B digital device, pursuant to part 15 of the FCC Rules. These limits are designed to provide reasonable protection against harmful interference in a residential installation. This equipment generates uses and can radiate radio frequency energy and, if not installed and used in accordance with the instructions, may cause harmful interference to radio communications. However, there is no guarantee that interference will not occur in a particular installation. If this equipment does cause harmful interferenceto radio or television reception, which can be determined by turning the equipment off and on, the user is encouraged to try to correct the interference by one or more of the following measures:

- Reorient or relocate the receiving antenna.
- Increase the separation between the equipment and receiver.
- Connect the equipment into an outlet on a circuit different from that to which the receiver is connected.
- Consult the dealer or an experienced radio/TV technician for help.

FCC Radiation Exposure Statement

The device has been evaluated to meet general RF exposure requirement. The device can be used in portable exposure condition without restriction.

ISED Radiation Exposure Statement

The device has been evaluated to meet general RF exposure requirement. The device can be used installed and operated with minimum distance 0mm between the radiator and your body.

L'appareil a é t é é valu é pour r é pondre aux exigences g é n é rales d'exposition aux RF.Cet é quipement doit ê tre install é et utilis é avec une distance minimale de 0 mm entre le radiateur et votre corps.

Operating Frequency

MIC 1/CH							
0.1	536.57	2.6	542.82	5.1	549.07	7.6	555.32
0.2	536.82	2.7	543.07	5.2	549.32	7.7	555.57
0.3	537.07	2.8	543.32	5.3	549.57	7.8	555.82
0.4	537.32	2.9	543.57	5.4	549.82	7.9	556.07
0.5	537.57	3.0	543.82	5.5	550.07	8.0	556.32
0.6	537.82	3.1	544.07	5.6	550.32	8.1	556.57
0.7	538.07	3.2	544.32	5.7	550.57	8.2	556.82
0.8	538.32	3.3	544.57	5.8	550.82	8.3	557.07
0.9	538.57	3.4	544.82	5.9	551.07	8.4	557.32
1.0	538.82	3.5	545.07	6.0	551.32	8.5	557.57
1.1	539.07	3.6	545.32	6.1	551.57	8.6	557.82
1.2	539.32	3.7	545.57	6.2	551.82	8.7	558.07
1.3	539.57	3.8	545.82	6.3	552.07	8.8	558.32
1.4	539.82	3.9	546.07	6.4	552.32	8.9	558.57
1.5	540.07	4.0	546.32	6.5	552.57	9.0	558.82
1.6	540.32	4.1	546.57	6.6	552.82	9.1	559.07
1.7	540.57	4.2	546.82	6.7	553.07	9.2	559.32
1.8	540.82	4.3	547.07	6.8	553.32	9.3	559.57
1.9	541.07	4.4	547.32	6.9	553.57	9.4	559.82
2.0	541.32	4.5	547.57	7.0	553.82	9.5	560.07
2.1	541.57	4.6	547.82	7.1	554.07	9.6	560.32
2.2	541.82	4.7	548.07	7.2	554.32	9.7	560.57
2.3	542.07	4.8	548.32	7.3	554.57	9.8	560.82
2.4	542.32	4.9	548.57	7.4	554.82	9.9	561.07
2.5	542.57	5.0	548.82	7.5	555.07	10	561.32

MIC 2/CH							
10.1	562.37	12.6	568.62	15.1	574.87	17.6	581.12
10.2	562.62	12.7	568.87	15.2	575.12	17.7	581.37
10.3	562.87	12.8	569.12	15.3	575.37	17.8	581.62
10.4	563.12	12.9	569.37	15.4	575.62	17.9	581.87
10.5	563.37	13.0	569.62	15.5	575.87	18.0	582.12
10.6	563.62	13.1	569.87	15.6	576.12	18.1	582.37
10.7	563.87	13.2	570.12	15.7	576.37	18.2	582.62
10.8	564.12	13.3	570.37	15.8	576.62	18.3	582.87
10.9	564.37	13.4	570.62	15.9	576.87	18.4	583.12
11.0	564.62	13.5	570.87	16.0	577.12	18.5	583.37
11.1	564.87	13.6	571.12	16.1	577.37	18.6	583.62
11.2	565.12	13.7	571.37	16.2	577.62	18.7	583.87
11.3	565.37	13.8	571.62	16.3	577.87	18.8	584.12
11.4	565.62	13.9	571.87	16.4	578.12	18.9	584.37
11.5	565.87	14.0	572.12	16.5	578.37	19.0	584.62
11.6	566.12	14.1	572.37	16.6	578.62	19.1	584.87
11.7	566.37	14.2	572.62	16.7	578.87	19.2	585.12
11.8	566.62	14.3	572.87	16.8	579.12	19.3	585.37
11.9	566.87	14.4	573.12	16.9	579.37	19.4	585.62
12.0	567.12	14.5	573.37	17.0	579.62	19.5	585.87
12.1	567.37	14.6	573.62	17.1	579.87	19.6	586.12
12.2	567.62	14.7	573.87	17.2	580.12	19.7	586.37
12.3	567.87	14.8	574.12	17.3	580.37	19.8	586.62
12.4	568.12	14.9	574.37	17.4	580.62	19.9	586.87
12.5	568.37	15.0	574.62	17.5	580.87	20.0	587.12

	AT	BE	BG	CY	CZ	DE
	DK	EE	EL	ES	FI	FR
	HR	HU	IE	IT	LT	LU
	LV	MT	NL	PL	PT	RO
	SE	SI	SK	UK(NI)		

https://www.tonormic.com

support@tonormic.com

Vous êtes responsable de remettre tous les appareils électriques et électroniques usagés à des points de collecte correspondants.

Pour en savoir plus:
www.quefairedemesdechets.fr

FR

Les piles et batteries se recyclent

À DÉPOSER EN MAGASINA OU À DÉPOSER EN DÉCHÉTTERIE

Points de colllecte sur www.quefairedemesdechets.fr

FUJIAN EASTWEST LIFEWIT TECHNOLOGY CO.,LTD | RM 1201-1205, BLD 18, 2ND PHASE OF INNOVATION PARK, FUZHOU 350108, CHINA

EASTWEST ELECTRONIC COMMERCE CO US LIMITED | 3500 SOUTH DUPONT HIGHWAY, SUITE G106 DOVER, DE 19901 UNITED STATES

LIFEWIT LIMITED | UNIT 2, VINCENT HOUSE, FIRCROFT WAY, EDENBRIDGE UNITED KINGDOM

Lifewit GmbH | Friedenstraße 5 97072 Wuerzburg Germany

MADE IN CHINA