https://www.tonormic.com
support@tonormic.com

Vous êtes responsable de remettre tous les appareils électriques et électroniques usagés à des points de collecte correspondants.

Pour en savoir plus:
www.quefairedemesdechets.fr

MANUFACTURER: EASTWEST ELECTRONIC COMMERCE CO., LIMITED
ADDRESS: 6/F MANULIFE PLACE 348 KWUN TONG ROAD KL

EC-REP: Lifewit GmbH
ADDRESS: Friedenstraße 5 97072 Wuerzburg Germany

UK-REP: LIFEWIT LIMITED
ADDRESS: UNIT 2, VINCENT HOUSE, FIRCROFT WAY, EDENBRIDGE UNITED KINGDOM

US-REP: EASTWEST ELECTRONIC COMMERCE CO US LIMITED
ADDRESS: 3500 SOUTH DUPONT HIGHWAY, SUITE G106 DOVER, DE 19901 UNITE STATES

MADE IN CHINA

TONOR

Instruction Manual

TW880

UHF Wireless Microphone

ABOUT THIS MANUAL

Thank you for purchasing TONOR wireless microphone. This manual is intended to help you understand all about this microphone and how to use it. TONOR always strives for the ultimate user experience. All our knowledge and passion for audio technology are incorporated into building microphones with high performance for you. The TONOR microphone is high quality and easy to use to achieve the best user experience.

Enjoy your microphone!

TONOR Team

Package Including

TW880

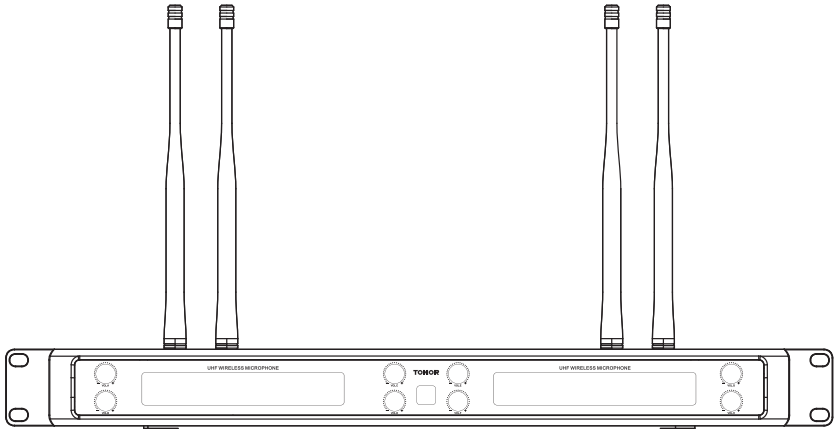

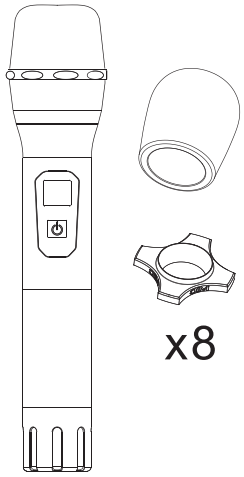

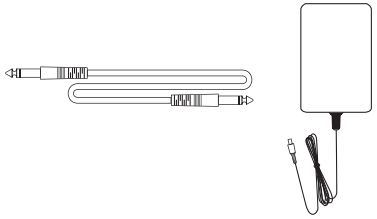

8 x microphone
1 x receiver
8 x anti-slip ring
8 x mic cover
1 x charging adapter
1 x 6.35mm cable
1 x manual

OPERATING ENVIRONMENTS & NOTES

When using this device, keep it away from water.

Use the device in ventilated environment, keep it away from fire.

Since it's a wireless device, please keep it away from other interfering sources.

Don't take apart the device.

Please use the standard power supply, high voltage may damage the device.

Please place the used batteries into the recycle bin, don't litter them.

SPECIFICATIONS

Frequency Response: 40hz-18khz
Maximum Radio-frequency Power Transmitted: 0.961dBm
Operating Frequency:
A MIC: 538.2-544.8MHz, B MIC: 545.4-552MHz,
C MIC: 553.8-560.4MHz, D MIC: 561-567.6MHz,
E MIC: 569.4-576MHz, F MIC: 576.6-583.2MHz,
G MIC: 585-591.6MHz, H MIC: 592.2-598.8MHz
Operating Range: Up to 90m
Frequency Stability: ±10ppm
SNR: 96dB
Sound Distortion: 0.03%
Mic Input Sensitivity: -52dB±3dB
RF Sensitivity: -95dBm
Operating Temperature: 0˚C to +55˚C
Antenna: monopole antenna
Antenna gain:3dBi

MICROPHONE OPERATION INSTRUCTION

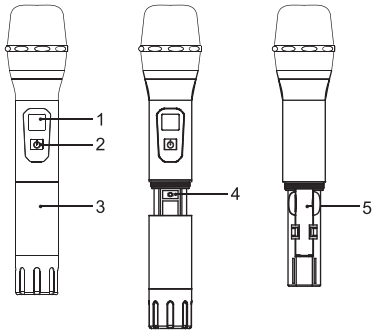

As shown in above pictures:

1. Display Screen
2. On/Off Switch
3. Tail Tube
4. HI-LO Button
5. Battery Compartment

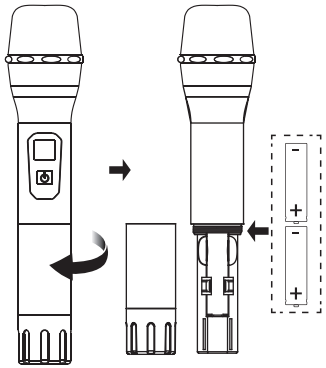

Install 2*AA batteries before using the wireless microphone and installing instruction is as follows:

1. Take down the tail tube of mic.
2. Install the batteries and tighten tail tube of mic.

Note: The positive and negative polarity of battery cannot be reversed.

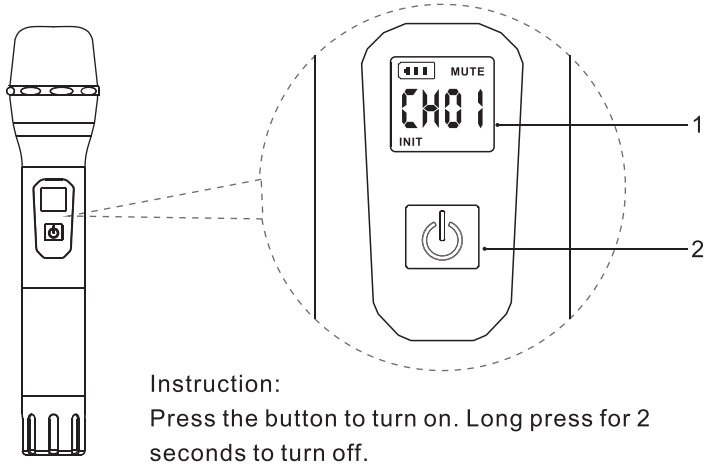

Instruction:
Press the button to turn on. Long press for 2 seconds to turn off.

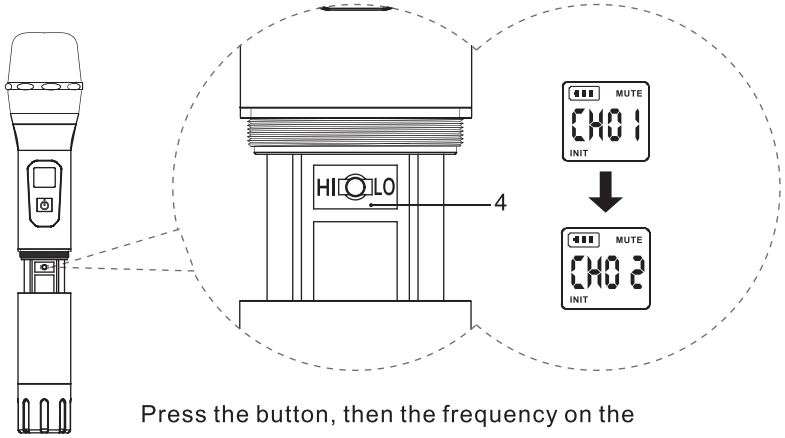

Press the button, then the frequency on the screen will be changed.

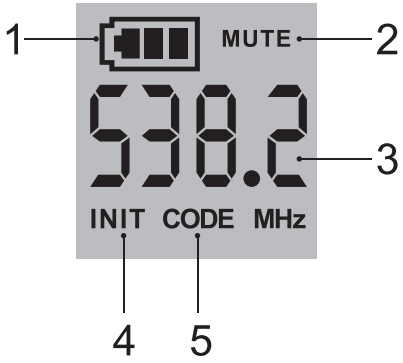

1. Microphone power display
2. Microphone mute indicator
-When the microphone is turned on, click the power button to turn on the mute, and MUTE lights up. Click the power button again to turn off the mute, and MUTE goes out.
3. Microphone frequency/number display
-The default frequency is displayed when the microphone is turned on. After 10 seconds, it switches to the corresponding microphone number CH A-CH F.
4. INIT indicator
-When the hand microphone is turned on, init appears, which means that the microphone and receiver are not locked. Unlocking does not affect normal use.
-When multiple sets are used, they will interfere with each other. Re-pairing is required to lock the hand microphone and receiver to avoid mutual interference during use.
5. CODE indicator
-When the hand microphone is turned on, code appears, indicating that the hand microphone and receiver are locked. When multiple sets are used, they will not interfere with each other.

RECEIVER INSTRUCTION

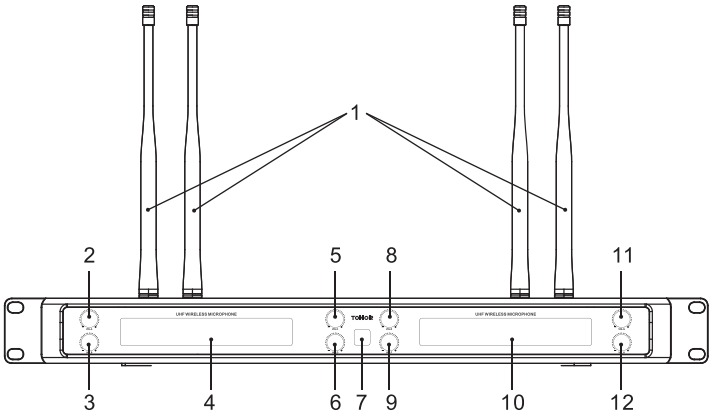

1. Receiving antenna
2. Volume adjusting button for microphone A
3. Volume adjusting button for microphone B
4. LCD display screen for microphone A/B/C/D
5. Volume adjusting button for microphone C
6. Volume adjusting button for microphone D
7. Power switch
-Long press for 2 seconds to turn on/off.
8. Volume adjusting button for microphone E
9. Volume adjusting button for microphone F
10. LCD display screen for microphone E/F/G/H
11. Volume adjusting button for microphone G
12. Volume adjusting button for microphone H

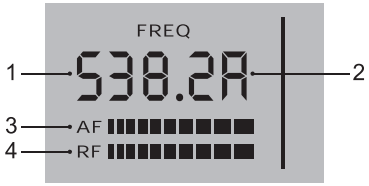

As shown in above pictures:
1. Current frequency of mic A
2. Microphone A number
3. Volume levels of mic A
4. Signal levels of mic A

The display contents of the other 7 channels are the same as A.

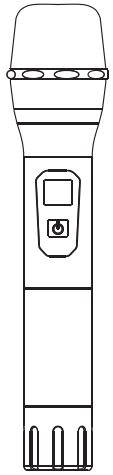

When the receiver is connected to power supply successfully, but the batteries of microphone are not installed, LCD screen will display as following pictures:

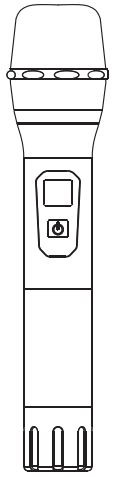

When the receiver is connected to power supply successfully, and the batteries of microphone are also installed, LCD screen will display as following pictures:

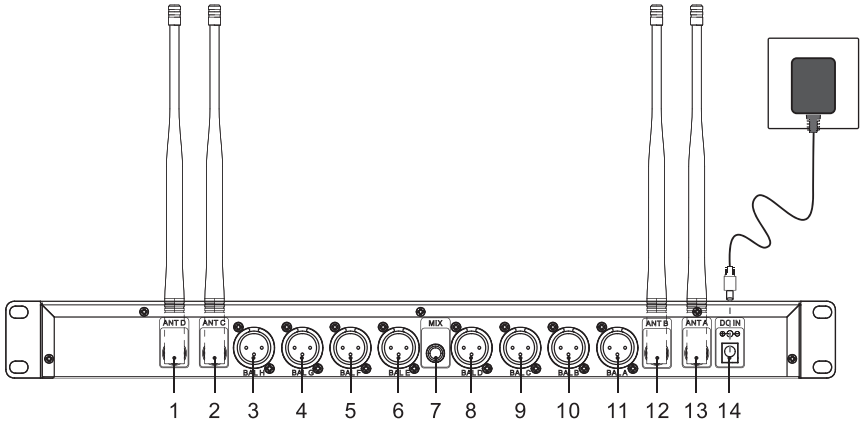

As shown in above pictures:

1. ANT D
2. ANT C
3. BAL H
4. BAL G
5. BAL F
6. BAL E
7. MIX
8. BAL D
9. BAL C
10. BAL B
11. BAL A
12. ANT B
13. ANT A
14. DC IN

Before using the device, take out the wireless receiver from the package, and connect the following cables: firstly use the 6.35 audio cable to connect the receivers MIX's port and other audio devices (speaker, amplifier, mixer, etc,). Secondly, erect the antenna, and connect the power cable. Thirdly, check if microphone is connected to the receiver successfully after turning on the
device.

STEPS TO PAIR

1. Make sure the receiver is off.
2. Turn off the microphone, then press the HI-LO Button and Power Button at the same time into the pairing mode. The handheld microphone screen flashes quickly, then release two buttons simultaneously.
3. Turn on the receiver, wait for 5 seconds, then click the HI/LO button on the handheld microphon, until the handheld microphone screen beco-mes steady and no longer flashes, the RF light on the receiver turns steady, indicating that the pairing is successful.
4. If there are more than one trouble mics, repeat 1-3 steps for others to finish pairing.

TROUBLESHOOTING

-Turn on all the microphones or bodypacks, but one of them has on sound.
Reconnect the microphone or bodypack and receiver.

-Received signal with noise or interference.
Change to other channels;
Check if receiving distance exceeds the maximum range.

-Microphone cannot be tumed on.
Check if batteries are installed reversely;
Change to new batteries.

-The microphone number is repeated and cannot be used normally.
First turn off the microphone with the problem.
Then press and hold the power button for about 8 seconds, wait for the screen to display "CH" and then release the button.
Short press the "HI-LO button" to select A/B/C/D/E/F/G/H, and then short press the power button to confirm and exit.
Note:Press and hold the power button for 8 seconds to enter the microphone sequence switching mode. If there is no operation, the screen flashes 10 times and automatically exits the settingmode.

-Multiple sets used together.
Each set of products is paired once according to "STEPS TO PAIR".
All are turned on, and press the HI-LO button on the microphone to set all microphone frequencies to unique frequencies.

EU Declaration of conformity

• RoHS Directive (2011/65/EU)

Hereby, Fujian EastWest Lifewit Technology Co.,LTD declares that the radio equipment type TW880 is in compliance with Directive 2014/53/EU. The full text of the EU declaration of conformity is available at the following internet address:
https://www.tonormic.com/pages/eu-declaration-of-conformity

Conditions and restrictions for using frequencies

There may be special conditions and restrictions for using frequencies in your country.Before putting the product into operation, find the information for your country at the following address:
https://www.tonormic.com/pages/permitted-frequency-bands

WARRANTY

TONOR provides 2 years of after-sales service, free replacement to products that are NOT damaged resulting from accident, alteration, misuse, negligence, or abuse. If exceeding 30 days of Amazon return policy, you can still contact us through our Shopify TONORMIC. We will serve you with full sincerity!
Shopify link: https://www.tonormic.com
Email: support@tonormic.com

FCC Statement

US MX

This device complies with part 15 of the FCC Rules. Operation is subject to the following two conditions:

(1)This device may not cause harmful interference.

(2)This device must accept any interference received, including interference that may cause undesired operation.

ISED Statement

CA

This device contains licence-exempt transmitter(s)/receiver(s) that comply with Innovation, Science and Economic Development Canada's licence-exempt RSS(s). Operation is subject to the following two conditions:

(1) This device may not cause interference.

(2) This device must accept any interference, including interference that may cause undesired operation of the device.

FR

L'émetteur/récepteur exempt de licence contenu dans le présent appareil est conforme aux CNR d'Innovation, Sciences et Développement économique Canada applicables aux appareils radio exempts de licence. L'exploitation est autorisée aux deux conditions suivantes :

(1) L' appareil ne doit pas produire de brouillage;

(2) L' appareil doit accepter tout brouillage radioélectrique subi, même si le brouillage est susceptible d' en compromettre le fonctionnement.

TW880 FREQUENCY LIST							
CHA	CHB	CHC	CHD	CHE	CHF	CHG	CHH
538.2	545.4	553.8	561	569.4	576.6	585	592.2
538.8	546	554.4	561.6	570	577.2	585.6	592.8
539.4	546.6	555	562.2	570.6	577.8	586.2	593.4
540	547.2	555.6	562.8	571.2	578.4	586.8	594
540.6	547.8	556.2	563.4	571.8	579	587.4	594.6
541.2	548.4	556.8	564	572.4	579.6	588	595.2
541.8	549	557.4	564.6	573	580.2	588.6	595.8
542.4	549.6	558	565.2	573.6	580.8	589.2	596.4
543	550.2	558.6	565.8	574.2	581.4	589.8	597
543.6	550.8	559.2	566.4	574.8	582	590.4	597.6
544.2	551.4	559.8	567	575.4	582.6	591	598.2
544.8	552	560.4	567.6	576	583.2	591.6	598.8

	AT	BE	BG	CY	CZ	DE
	DK	EE	EL	ES	FI	FR
	HR	HU	IE	IT	LT	LU
	LV	MT	NL	PL	PT	RO
	SE	SI	SK	UK(NI)		

FCC Requirement

changes or modifications not expressly approved by the party responsible for compliance could void the user’ s authority to operate the equipment.

This device complies with Part 15 of the FCC Rules. Operation is subject to the following two conditions:

(1) this device may not cause harmful interference, and

(2) this device must accept any interference received, including interference that may cause undesired operation.

Note: This equipment has been tested and found to comply with the limits for a Class B digital device, pursuant to Part 15 of the FCC Rules. These limits are designed to provide reasonable protection against harmful interference in a residential installation. This equipment generates, uses, and can radiate radio frequency energy, and if not installed and used in accordance with the instructions, may cause harmful interference to radio communications. However, there is no guarantee that interference will not occur in a particular installation. If this equipment does cause harmful interference to radio or television reception, which can be determined by turning the equipment off and on, the user is encouraged to try to correct the interference by one or more of the following measures:

– Reorient or relocate the receiving antenna.

– Increase the separation between the equipment and receiver.

– Connect the equipment into an outlet on a circuit different from that to which the receiver is connected.

– Consult the dealer or an experienced radio/TV technician for help.

RF warning for Portable device:

– The device has been evaluated to meet general RF exposure requirement. The de vice can be used in portable exposure condition without restriction.