by HFCL

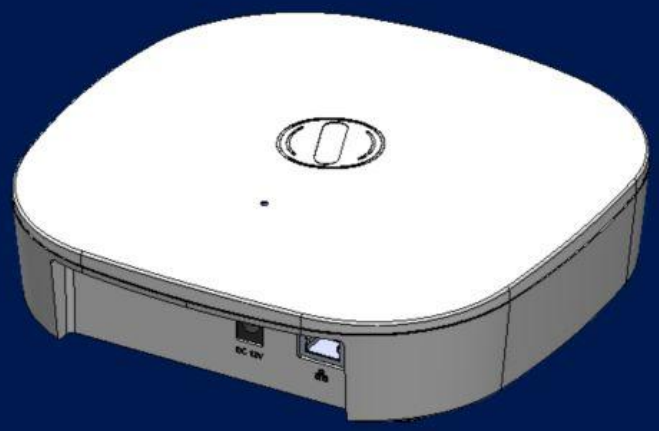

Quick Start Guide
ion4xi_w
Access Point

Introduction

Thank you for choosing ion4xi_w wireless Access Point with 2x2:2 Multi-User MIMO and 802.11ax Wave 2 compliance.

Packaging Content

ion4xi_w
Access point
(Qty:1)

DC Adaptor
(Varies by Region)
(Qty:1 set)

Mounting screws and
Plastic wall Anchors
(Qty - 4/4)

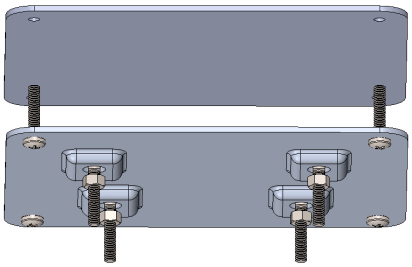

Mounting Bracket
(Qty - 1)

Quick Start Guide
(Qty - 1)

ion4xi_w Specification	
Peak throughput (aggregate)	Approx 2.1Gbps (2401 Mbps for 5GHz and 573 Mbps for 2.4 GHz
Wi-Fi Standard Support	802.11a/b/g/n/ac/ax
Interface	10/100/1000/2500BASE-T Ethernet
Radio Mode	2x2 MU-MIMO with 2 spatial streams
Mesh Support	Self-creating , Self -healing Mesh
maximum number of SSID (per radio)	4 SSID per radio and 8 combined
Maximum User Support	128 on 5GHz and 128 on 2.4 GHz
Power supply	IEEE 802.3at Adaptor
Power Comsumption (Max)	18 W (approx)
Max Transmit Power	25 dBm for 2.4 GHz , 24 dBm for 5GHz (will depend on country-specific guidelines)
Antenna Type	Integrated Omnidirectional Antennas
Antenna Gain	5 dBi gain for 2.4GHz and 7 dBi gain for 5GHz
Management	Standalone (via GUI) or through on premise based solution or cloud-based.
Enclosure Dimentions	180 x 180 x 47mm (7.08 x 7.08 x 1.85 inch)
Weight	Approx 0.8 Kg
Operating Temperature	0°C to 45°C
Certifications	FCC Class B, CE,RoHS 3.0,Passpoint 3.0, WPA3,IP67

Product Overview

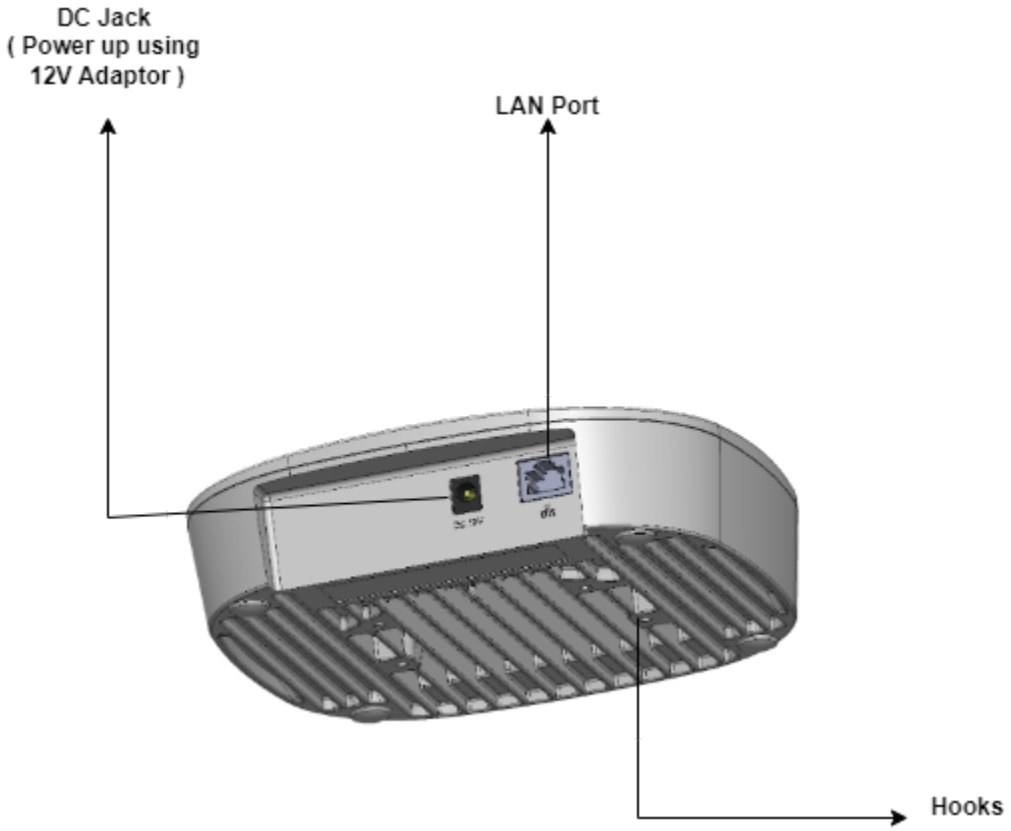

Mounting of ion4xi_w Access Point

1. Place the mounting bracket which came with the package on a wall or ceiling and mark holes with a marker where you will insert the screws.Drill holes in the marked points and insert the plastic wall anchors.

2. Use supplied screws and attach mounting brackets on the wall.

Note: Make sure that mounting bracket is tightly installed before mounting the access point on the wall or ceiling.

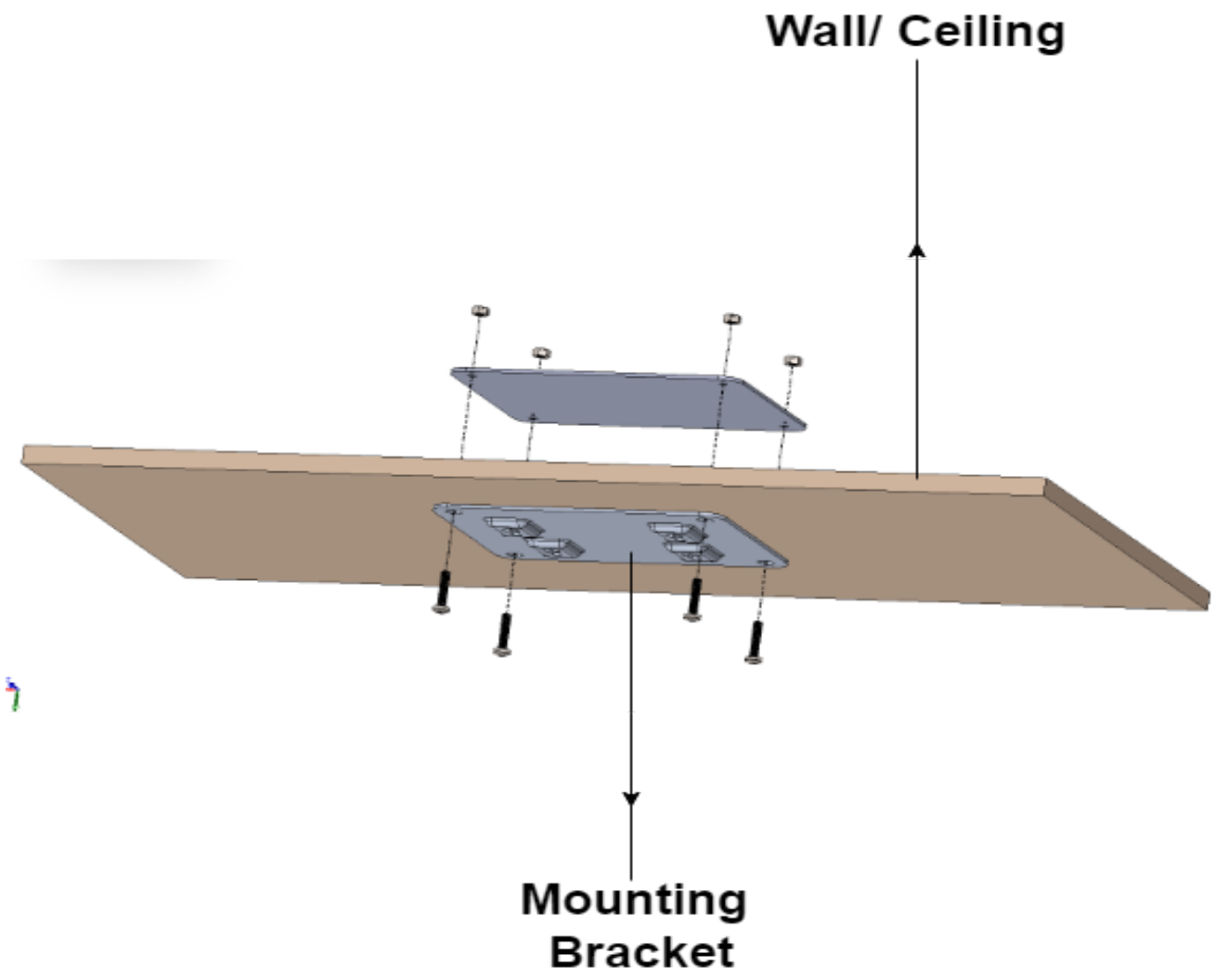

3. Align the mounting slots of Access Point with the hooks of the mounting bracket, ensure that it is properly hinged.

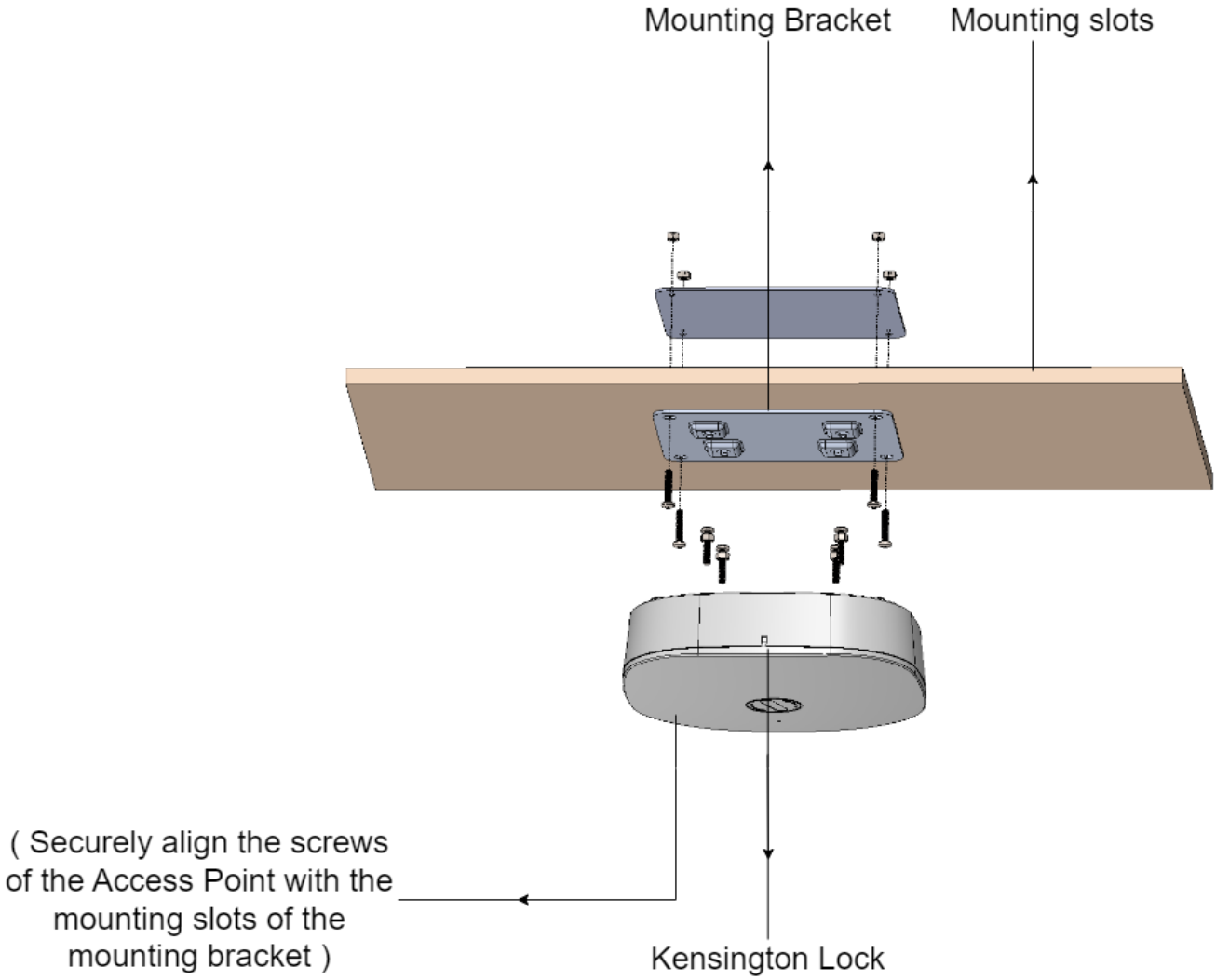

Unmounting of ion4xi_w Access Point

1. Open the screws of the Access Point out from the mounting slots of mounting brackets.

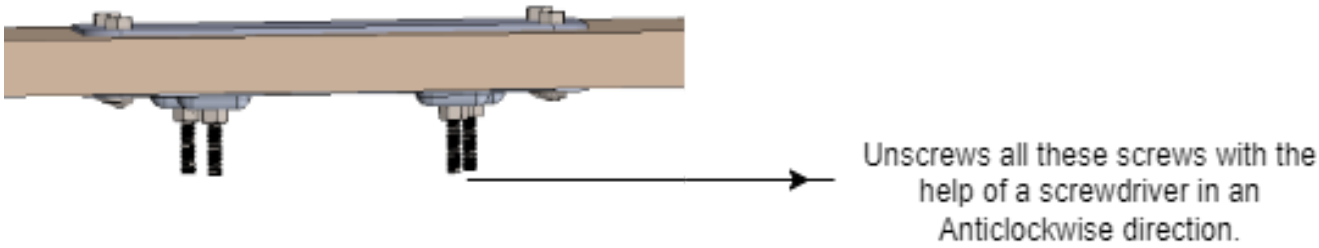

WARNING: HFCL is not held liable for any damages incurred during the process.

Getting the ion4xi_w Online

Step 1: power up

The Access Point can be powered up using 12V DC adaptor as shown below.

12V DC Power Adaptor

---------- Power up using DC Power Adaptor ----------

Note: Power Plug and Adaptor will vary by country / region

Step 2: Connect to the network

Section 1: Standalone AP

Follow the steps mentioned below and connect the Access Point to a network :

1. Connect an ethernet cable to the computer.

2. Connect the other end of the ethernet cable to the LAN Port on the ion4xi_w Access point

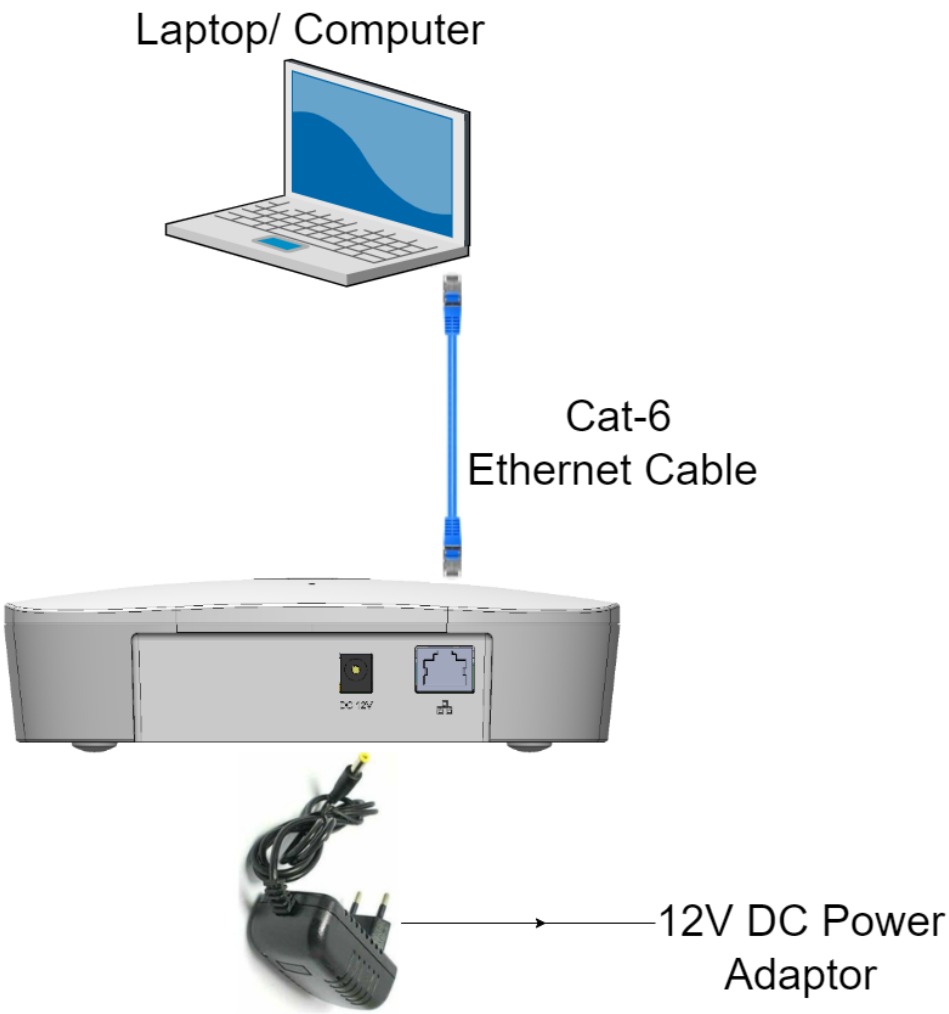

3. Open the web browser and enter the Access Point static IP address in the Address bar: 192.168.1.1

4. A login screen will appear.

5. Enter the default login credential details:
   User - root, Password- hfcl!@ion

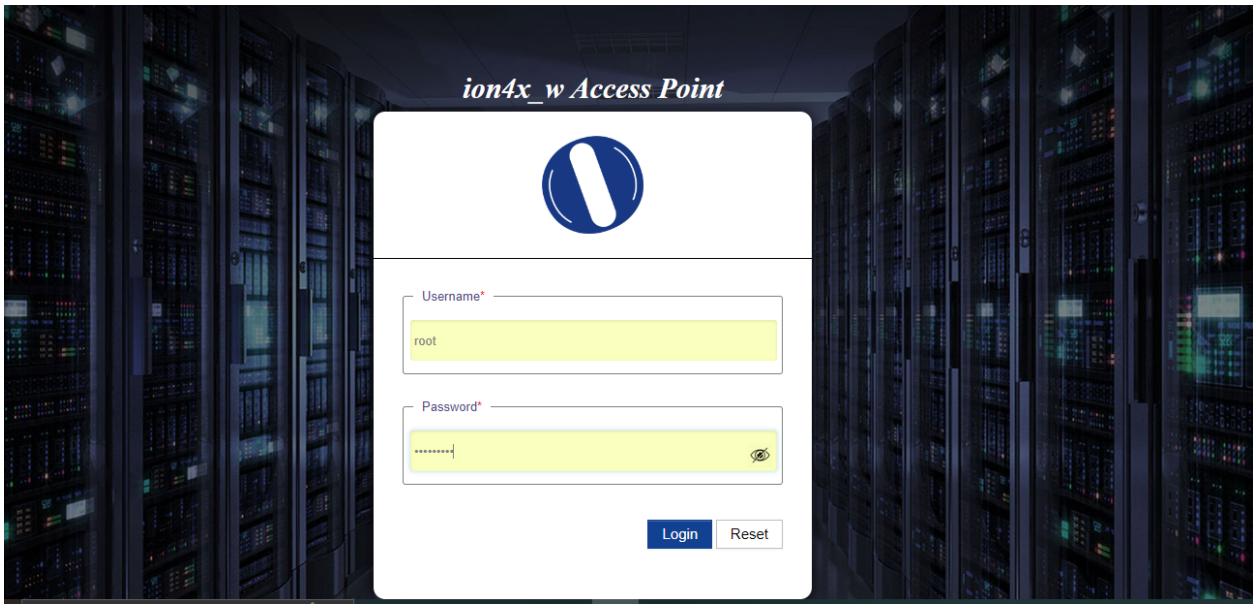

Section 2: Controller Managed AP

Follow the step mentioned to connect Access Point to a network:

1. Connect an Ethernet cable to the computer.

2. Power-up the AP through 12V DC adaptor

3. Connect the AP to DHCP network and internet.

4. Login to HFCL IO cloud controller (cNMS) iocloud.hfcl.com with credentials provided.

4a. To get cNMS login credentail, please send request email to iosupport@hfcl.com with below details

Customer Name	Customer email address	Customer address	Customer contact number	Distributor/ Retailer Name	No. of AP Purchased	Country

5. Add AP group under configuration

6. Add APs in the AP group

7. Create SSID in the AP Group

8. Refer our website io.hfcl.com for detailed information to configure AP through cNMs

Step 3: Check the LED status

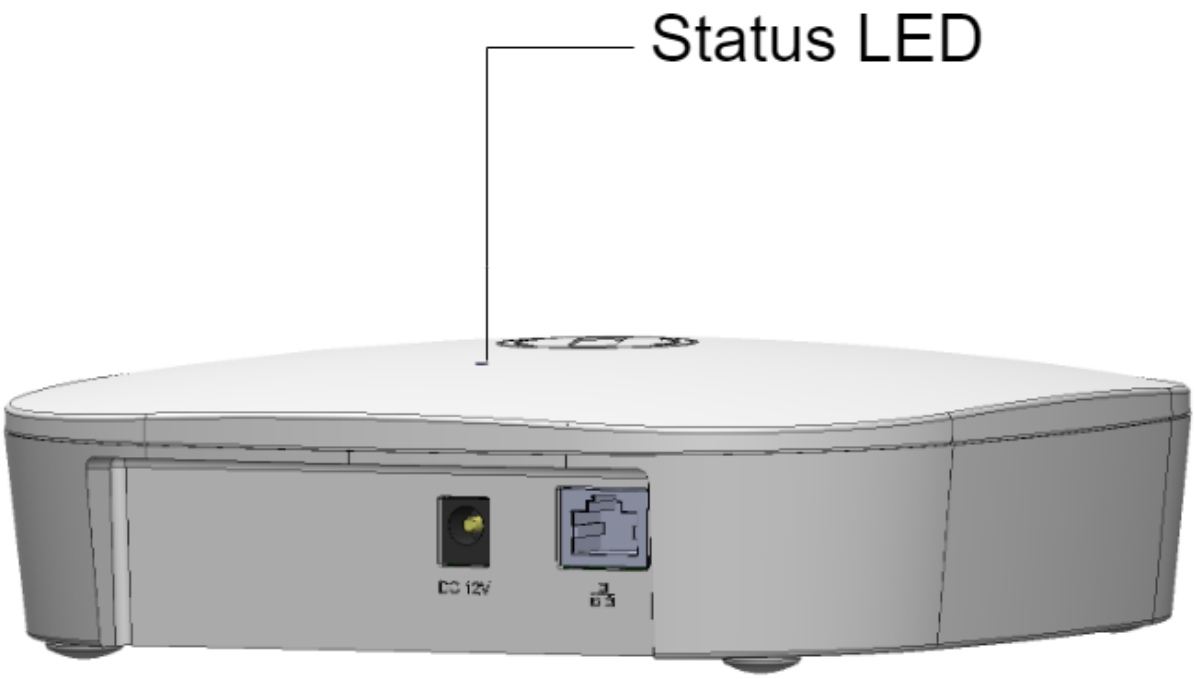

LED Color	Status
Status LED Blue (Solid)	Solid blue color notifies the user that either 2.4 GHz radio, 5GHz or both radio are active
Status LED Blue (Blinking)	Blinking blue color notifies the user that data is being transmitted on either 2.4 GHz radio, 5 GHz radio or both radios

Safety Precautions

Observe the following safety precautions to avoid damage to the ion4xi_w Access Point:

- Do not subject the device to high temperatures.
- Keep away from high voltage cables
- Disconnect the device before cleaning it
- Do not wipe the device with a damp cloth
- Do not open the enclosure of the Access Point
- Fasten the device tightly with the mount

Federal Communication Commission Certified:

This equipment is tested and found to comply with the limits for a Class B digital device, pursuant to Part 15 of the FCC Rules. These limits are designed to provide reasonable protection against harmful interference in a residential installation.
These equipment generates, uses and can radiate radio frequency energy and, if not installed and used in accordance with the instructions, may cause harmful interference to radio communications. However, there is no guarantee that interference will not occur in a particular installation. If these equipment does cause harmful interference to radio or television reception, which can be determined by turning the equipment off and on, the user is encouraged to try to correct the interference by one of the following measures:
1. Reorient or relocate the receiving antenna.
2. Increase the separation between the equipment and receiver.
3. Connect the equipment into an outlet on a circuit different from that to which the receiver is connected.
4. Consult the dealer or an experienced radio/TV technician for help.

FCC Caution:
To assure continued compliance, any changes or modifications not expressly approved by the party responsible for compliance could void the user's authority to operate this equipment. (Example - use only shielded interface cables when connecting to computer or peripheral devices).
FCC Radiation Exposure Statement:

This equipment complies with FCC RF radiation exposure limits set forth for an uncontrolled environment. These equipment should be installed and operated with a minimum distance of 20 centimeters between the radiator and your body.
This transmitter must not be co-located or operating in conjunction with any other antenna or transmitter. The antennas used for this transmitter must be installed to provide a separation distance of at least 20 cm from all. persons and must not be co-located or operating in conjunction with any other antenna or transmitter.
These devices comply with Part 15 of the FCC Rules. Operation is subject to the following two conditions:
1. These devices may not cause harmful interference
2. These devices must accept any interference received, including interference that may cause undesired operation