Shenzhen Huatongwei International Inspection Co.,Ltd.
Huatongwei Building, keji'nan 12th Road, High-Tech Industrial Park, Nanshan District, Shenzhen, Guangdong, China.
Phone:86-755-26715499 E-mail: cs@szhtw.com.cn Website:http://www.szhtw.com.cn

FCC REPORT

Report Reference No. ..... :	**CHTEW21080161**
Project No.....:	**SHT2107001001EW**
FCC ID ..... :	**2AZP5-E554TA**
Applicant's name ..... :	**DUO AMERICA, LLC**
Address.....:	8925 NW 26TH ST, DORAL, MIAMI, Florida, United States
Test item description ..... :	**Smart Phone**
Trade Mark .....:	HYUNDAI
Model/Type reference.....:	E554
Listed Model(s) .....:	-
Standard ..... :	**FCC CFR Title 47 Part 2** **FCC CFR Title 47 Part 22** **FCC CFR Title 47 Part 24**
Date of receipt of test sample.....:	Aug. 11, 2021
Date of testing.....:	Aug. 12, 2021- Aug. 26, 2021
Date of issue.....:	Aug. 27, 2021
Result..... .....:	**Pass**

Report Verification:

Compiled by (position+printedname+signature)...:	File administrators Silvia Li	Silvia Li
Supervised by (position+printedname+signature)....:	Project Engineer Aaron Fang	Aaron.Fang
Approved by (position+printedname+signature)....:	Manager Hans Hu	Hans Hu

Testing Laboratory Name ..... :	**Shenzhen Huatongwei International Inspection Co., Ltd.**
Address.....:	1/F, Bldg 3, Hongfa Hi-tech Industrial Park, Genyu Road, Tianliao, Gongming, Shenzhen, China

Shenzhen Huatongwei International Inspection Co., Ltd. All rights reserved.

This publication may be reproduced in whole or in part for non-commercial purposes as long as the Shenzhen Huatongwei International Inspection Co., Ltd. is acknowledged as copyright owner and source of the material. Shenzhen Huatongwei International Inspection Co., Ltd. takes no responsibility for and will not assume liability for damages resulting from the reader's interpretation of the reproduced material due to its placement and context.

The test report merely correspond to the test sample.

Contents

1. TEST STANDARDS AND REPORT VERSION 3

1.1. Applicable Standards 3
1.2. Report version information 3

2. TEST DESCRIPTION 4

3. SUMMARY 5

3.1. Client Information 5
3.2. Product Description 5
3.3. Operation state 6
3.4. EUT configuration 6
3.5. Modifications 6

4. TEST ENVIRONMENT 7

4.1. Testing Laboratory Information 7
4.2. Equipments Used during the Test 8
4.3. Environmental conditions 9
4.4. Statement of the measurement uncertainty 9

5. TEST CONDITIONS AND RESULTS 10

5.1. Conducted Output Power 10
5.2. Peak-to-Average Ratio 11
5.3. 99% Occupied Bandwidth & 26 dB Bandwidth 12
5.4. Band Edge 13
5.5. Conducted Spurious Emissions 14
5.6. Frequency stability VS Temperature measurement 15
5.7. Frequency stability VS Voltage measurement 16
5.8. ERP and EIRP 17
5.9. Radiated Spurious Emission 20

6. TEST SETUP PHOTOS OF THE EUT 24

7. EXTERNAL AND INTERNAL PHOTOS OF THE EUT 25

8. APPENDIX REPORT 31

1. TEST STANDARDS AND REPORT VERSION

1.1. Applicable Standards

The tests were performed according to following standards:

FCC Rules Part 2: FREQUENCY ALLOCATIONS AND RADIO TREATY MATTERS; GENERAL RULES AND REGULATIONS
FCC Rules Part 22: PUBLIC MOBILE SERVICES
FCC Rules Part 24: PERSONAL COMMUNICATIONS SERVICES
TIA/EIA 603 E March 2016: Land Mobile FM or PM Communications Equipment Measurement and Performance Standards.
ANSI C63.26-2015: American National Standard for Compliance Testing of Transmitters Used in Licensed Radio Services
KDB 971168 D01 Power Meas License Digital Systems v03: MEASUREMENT GUIDANCE FOR CERTIFICATION OF LICENSED DIGITAL TRANSMITTERS

1.2. Report version information

Revision No.	Date of issue	Description
N/A	2021-08-27	Original

2. Test Description

Test Item	Section in CFR 47	Result	Test Engineer
Conducted Output Power	Part 2.1046 Part 22.913(a) Part 24.232(c)	Pass	Jiongsheng Feng
Peak-to-Average Ratio	Part 24.232	Pass	Jiongsheng Feng
99% Occupied Bandwidth & 26 dB Bandwidth	Part 2.1049 Part 22.917(b) Part 24.238(b)	Pass	Jiongsheng Feng
Band Edge	Part 2.1051 Part 22.917 Part 24.238	Pass	Jiongsheng Feng
Conducted Spurious Emissions	Part 2.1051 Part 22.917 Part 24.238	Pass	Jiongsheng Feng
Frequency stability VS Temperature	Part 2.1055(a)(1)(b) Part 22.355 Part 24.235	Pass	Jiongsheng Feng
Frequency stability VS Voltage	Part 2.1055(d)(1)(2) Part 22.355 Part 24.235	Pass	Jiongsheng Feng
ERP and EIRP	Part 22.913(a) Part 24.232(b)	Pass	Pan Xie
Radiated Spurious Emissions	Part 2.1053 Part 22.917 Part 24.238	Pass	Pan Xie

Note: The measurement uncertainty is not included in the test result.

3. SUMMARY

3.1. Client Information

Applicant:	DUO AMERICA, LLC
Address:	8925 NW 26TH ST, DORAL, MIAMI, Florida, United States
Manufacturer:	Shenzhen Tinno Mobile Technology Corp
Address:	No.33, Xiandong Road, Nanshan District, Shenzhen, P.R.China

3.2. Product Description

Name of EUT:	Smart Phone
Trade Mark:	HYUNDAI
Model No.:	E554
Listed Model(s):	-
SIM Information:	Support Two SIM Card
Power supply:	DC 3.8V
Adapter information:	Model:TN-050120U9 Input: AC100-240V, 50/60Hz 0.2A Output: 5.0Vdc, 1.2A 6.0W
Hardware version:	V1.0
Software version:	K320AN_11_12
2G:	
Support Network:	GSM, GPRS
Support Band:	GSM850, PCS1900
Modulation:	GSM/GPRS: GMSK
Transmit Frequency:	GSM850: 824.20MHz-848.80MHz PCS1900: 1850.20MHz-1909.80MHz
Receive Frequency:	GSM850: 869.20MHz-893.80MHz PCS1900: 1930.20MHz-1989.80MHz
GPRS Multislot Class:	12
Antenna type:	PIFA Antenna
Antenna gain:	GSM850: -3.56dBi PCS1900: -3.89dBi

3.3. Operation state

➢ **Test frequency list**

GSM850		PCS1900	
Channel	Frequency (MHz)	Channel	Frequency (MHz)
128	824.20	512	1850.20
190	836.60	661	1880.00
251	848.80	810	1909.80

➢ **Test mode**

Antenna port conducted and radiated test items were performed according to KDB 971168 D01 Power Meas. License Digital Systems v03 and ANSI C63.26-2015 with maximum output power.

Radiated measurements were performed with rotating EUT in different three orthogonal test planes to find the maximum emission.

Radiated emissions were investigated as following frequency range:

30 MHz to 10th harmonic for GSM850, PCS1900.

The Test EUT support two SIM card(SIM1,SIM2),so all the tests are performed at each SIM card (SIM1,SIM2) mode, the datum recorded is the worst case for all the mode at SIM1 Card mode

All modes and data rates and positions were investigated.

Test modes are chosen to be reported as the worst case configuration below:

Test modes		
Band	**Radiated**	**Conducted**
GSM 850	■ GSM link ■ GPRS Class 8 link	■ GSM link ■ GPRS Class 8 link
PCS 1900	■ GSM link ■ GPRS Class 8 link	■ GSM link ■ GPRS Class 8 link

3.4. EUT configuration

The following peripheral devices and interface cables were connected during the measurement:

● - supplied by the manufacturer

○ - supplied by the lab

○	/	Manufacturer:	/
		Model No.:	/
○	/	Manufacturer:	/
		Model No.:	/

3.5. Modifications

No modifications were implemented to meet testing criteria.

4. TEST ENVIRONMENT

4.1. Testing Laboratory Information

Laboratory Name	Shenzhen Huatongwei International Inspection Co., Ltd.	
Laboratory Location	1/F, Bldg 3, Hongfa Hi-tech Industrial Park, Genyu Road, Tianliao, Gongming, Shenzhen, China	
Connect information:	Tel: 86-755-26715499 E-mail: cs@szhtw.com.cn http://www.szhtw.com.cn	
Qualifications	Type	Accreditation Number
	FCC	762235

4.2. Equipments Used during the Test

Used	Test Equipment	Manufacturer	Equipment No.	Model No.	Serial No.	Last Cal. Date (YY-MM-DD)	Next Cal. Date (YY-MM-DD)
●	Signal and spectrum Analyzer	R&S	HTWE0242	FSV40	100048	2020/10/19	2021/10/18
●	Signal & Spectrum Analyzer	R&S	HTWE0262	FSW26	103440	2020/10/19	2021/10/18
●	Spectrum Analyzer	Agilent	HTWE0286	N9020A	MY50510187	2020/10/19	2021/10/18
●	Radio communication tester	R&S	HTWE0287	CMW500	137688-Lv	2020/10/19	2021/10/18
●	Test software	Tonscend	N/A	JS1120	N/A	N/A	N/A

● Radiated Spurious Emission

Used	Test Equipment	Manufacturer	Equipment No.	Model No.	Serial No.	Last Cal. Date (YY-MM-DD)	Next Cal. Date (YY-MM-DD)
●	Semi-Anechoic Chamber	Albatross projects	HTWE0122	SAC-3m-01	N/A	2018/09/27	2021/09/26
●	Spectrum Analyzer	R&S	HTWE0098	FSP40	100597	2020/10/20	2021/10/19
●	Loop Antenna	R&S	HTWE0170	HFH2-Z2	100020	2021/04/06	2022/04/05
●	Broadband Horn Antenna	SCHWARZBECK	HTWE0103	BBHA9170	BBHA9170472	2018/10/11	2021/10/11
●	Ultra-Broadband Antenna	SCHWARZBECK	HTWE0123	VULB9163	538	2021/04/06	2022/04/05
●	Horn Antenna	SCHWARZBECK	HTWE0126	9120D	1011	2020/04/01	2023/03/31
●	Pre-amplifier	CD	HTWE0071	PAP-0102	12004	2020/11/13	2021/11/12
●	Broadband Preamplifier	SCHWARZBECK	HTWE0201	BBV 9718	9718-248	2021/03/05	2022/03/04
●	RF Connection Cable	HUBER+SUHNER	HTWE0120-01	6m 18GHz S Serisa	N/A	2021/02/26	2022/02/25
●	RF Connection Cable	HUBER+SUHNER	HTWE0120-02	6m 3GHz RG Serisa	N/A	2021/02/26	2022/02/25
●	RF Connection Cable	HUBER+SUHNER	HTWE0120-03	6m 3GHz RG Serisa	N/A	2021/02/26	2022/02/25
●	RF Connection Cable	HUBER+SUHNER	HTWE0120-04	6m 3GHz RG Serisa	N/A	2021/02/26	2022/02/25
●	RF Connection Cable	HUBER+SUHNER	HTWE0121-01	6m 18GHz S Serisa	N/A	2021/02/26	2022/02/25
●	EMI Test Software	Audix	N/A	E3	N/A	N/A	N/A

● Auxiliary Equipment

Used	Test Equipment	Manufacturer	Equipment No.	Model No.	Serial No.	Last Cal. Date (YY-MM-DD)	Next Cal. Date (YY-MM-DD)
●	Climate chamber	ESPEC	HTWE0254	GPL-2	N/A	2020/10/21	2021/10/20
●	DC Power Supply	Gwinstek	HTWE0274	SPS-2415	GER835793	N/A	N/A

4.3. Environmental conditions

During the measurement the environmental conditions were within the listed ranges:

Voltage	VN=Nominal Voltage	DC 3.80V
	VL=Lower Voltage	DC 3.60V
	VH=Higher Voltage	DC 4.35V
Temperature	TN=Normal Temperature	25 °C
	Extreme Temperature	From −30° to + 50° centigrade
Humidity	30~60 %	
Air Pressure	950-1050 hPa	

4.4. Statement of the measurement uncertainty

The data and results referenced in this document are true and accurate. The reader is cautioned that there may be errors within the calibration limits of the equipment and facilities. The measurement uncertainty was calculated for all measurements listed in this test report acc. to TR-100028-01”Electromagnetic compatibilityand Radio spectrum Matters (ERM);Uncertainties in the measurementof mobile radio equipment characteristics;Part 1”and TR-100028-02 “Electromagnetic compatibilityand Radio spectrum Matters (ERM);Uncertainties in the measurementof mobile radio equipment characteristics;Part 2 “ and is documented in the Shenzhen Huatongwei International Inspection Co., Ltd quality system acc. to DIN EN ISO/IEC 17025. Furthermore, component and process variability of devices similar to that tested may result in additional deviation. The manufacturer has the sole responsibility of continued compliance of the device.

Hereafter the best measurement capability for Shenzhen Huatongwei laboratory is reported:

Test Items	Measurement Uncertainty	Notes
Transmitter power conducted	0.51 dB	(1)
Transmitter power Radiated	2.66dB for <1GHz 3.44dB for >1GHz	(1)
Conducted spurious emissions 9kHz~40GHz	0.51 dB	(1)
Radiated spurious emissions	2.66dB for <1GHz 3.44dB for >1GHz	(1)
Occupied Bandwidth	15Hz for <1GHz 70Hz for >1GHz	(1)
Frequency error	15Hz for <1GHz 70Hz for >1GHz	(1)

(1) This uncertainty represents an expanded uncertainty expressed at approximately the 95% confidence level using a coverage factor of k=1.96.

5. TEST CONDITIONS AND RESULTS

5.1. Conducted Output Power

LIMIT

N/A

TEST CONFIGURATION

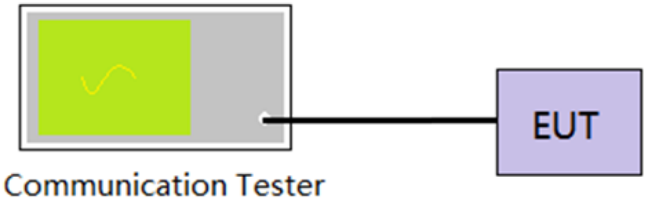

TEST PROCEDURE

1. The EUT output port was connected to communication tester.
2. Set EUT at maximum power through communication tester.
3. Select lowest, middle, and highest channels for each band and different modulation.
4. Measure the maximum burst average power.

TEST MODE:

Please refer to the clause 3.3

TEST RESULTS

☒ **Passed** ☐ **Not Applicable**

Refer to appendix A on the section 8 appendix report

5.2. Peak-to-Average Ratio

LIMIT

13dB

TEST CONFIGURATION

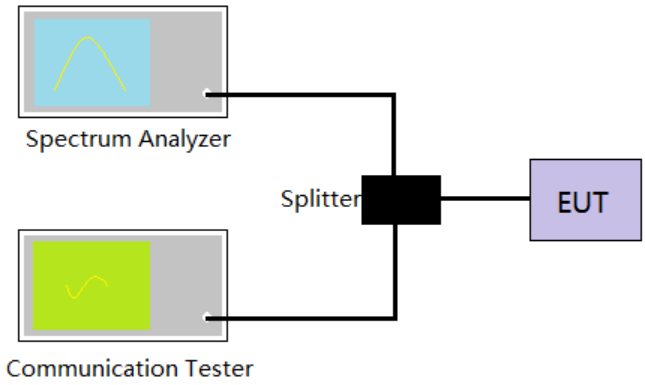

TEST PROCEDURE

1. The EUT was connected to the spectrum analyzer and communication tester via a power splitter
2. Set EUT in maximum power output.
3. Center Frequency = Carrier frequency, RBW > Emission bandwidth of signal
4. The signal analyzer was set to collect one million samples to generate the CCDF curve
5. The measurement interval was set depending on the type of signal analyzed.
   i. For continuous signals (>98% duty cycle), the measurement interval was set to 1ms.
   ii. For bursttransmissions, the spectrum analyzer is set to use an internal " RF Burst" trigger that issynced with an incoming pulse and the measurement interval is set to less than the durationof the " on time" of one burst to ensure that energy is only captured during a time in whichthetransmitter is operating at maximum power
6. Record the maximum PAPR level associated with a probability of 0.1%.

TEST MODE:

Please refer to the clause 3.3

TEST RESULTS

☒ **Passed** ☐ **Not Applicable**

Refer to appendix B on the section 8 appendix report

5.3. 99% Occupied Bandwidth & 26 dB Bandwidth

LIMIT

N/A

TEST CONFIGURATION

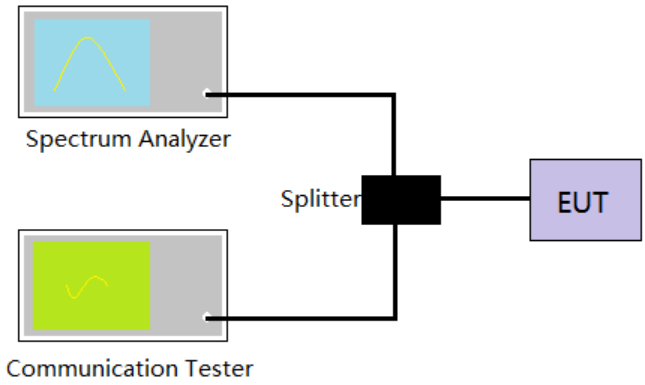

TEST PROCEDURE

1. The EUT was connected to the spectrum analyzer and communication tester via a power splitter
2. Set EUT in maximum power output.
3. Spectrum analyzer setting as follow:

   Center Frequency= Carrier frequency, RBW=1% to 5% of anticipated OBW, VBW= 3 * RBW, Detector=Peak,

   Trace maximum hold.
4. Record the value of 99% Occupied bandwidth and -26dB bandwidth.

TEST MODE:

Please refer to the clause 3.3

TEST RESULTS

☒ **Passed** ☐ **Not Applicable**

Refer to appendix C on the section 8 appendix report

5.4. Band Edge

LIMIT

Part 24.238 and Part 22.917 specify that the power of any emission outside of the authorized operating frequency ranges must be attenuated below the transmitting power (P) by a factor of at least 43 + 10 log(P) dB.

The specification that emissions shall be attenuated below the transmitter power (P) by at least 43 + 10 log (P) dB, translates in the relevant power range (1 to 0.001 W) to -13 dBm. At 1 W the specified minimum attenuation becomes 43 dB and relative to a 30 dBm (1 W) carrier becomes a limit of -13 dBm. At 0.001 W (0 dBm) the minimum attenuation is 13 dB, which again yields a limit of -13 dBm. In this way a translation of the specification from relative to absolute terms is carried out.

TEST CONFIGURATION

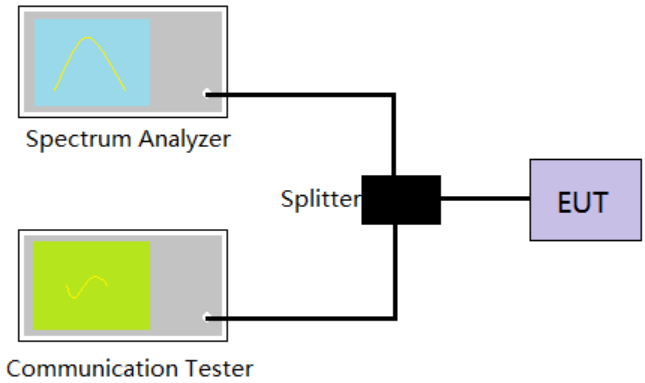

TEST PROCEDURE

1. The EUT was connected to the spectrum analyzer and communication tester via a power splitter
2. Set EUT in maximum power output.
3. The band edges of low and high channels were measured.
4. Spectrum analyzer setting as follow:

   RBW=3KHz, VBW = 10KHz, Sweep time= Auto
5. Record the test plot.

TEST MODE:

Please refer to the clause 3.3

TEST RESULTS

☒ **Passed** ☐ **Not Applicable**

Refer to appendix D on the section 8 appendix report

5.5. Conducted Spurious Emissions

LIMIT

Part 24.238 and Part 22.917 specify that the power of any emission outside of the authorized operating frequency ranges must be attenuated below the transmitting power (P) by a factor of at least 43 + 10 log(P) dB.

The specification that emissions shall be attenuated below the transmitter power (P) by at least 43 + 10 log (P) dB, translates in the relevant power range (1 to 0.001 W) to -13 dBm. At 1 W the specified minimum attenuation becomes 43 dB and relative to a 30 dBm (1 W) carrier becomes a limit of -13 dBm. At 0.001 W (0 dBm) the minimum attenuation is 13 dB, which again yields a limit of -13 dBm. In this way a translation of the specification from relative to absolute terms is carried out.

TEST CONFIGURATION

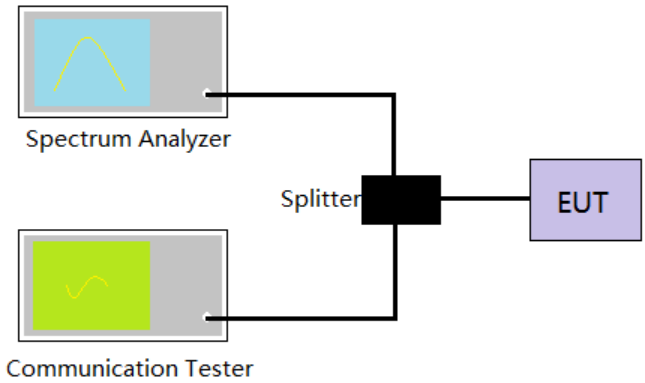

TEST PROCEDURE

1. The EUT was connected to the spectrum analyzer and communication tester via a power splitter
2. Set EUT in maximum power output.
3. Spectrum analyzer setting as follow:

   Below 1GHz, RBW=100KHz, VBW = 300KHz, Detector=Peak, Sweep time= Auto

   Above 1GHz, RBW=1MHz, VBW=3MHz, Detector=Peak, Sweep time= Auto

   Scan frequency range up to 10th harmonic.
4. Record the test plot.

TEST MODE:

Please refer to the clause 3.3

TEST RESULTS

☒ **Passed** ☐ **Not Applicable**

Refer to appendix E on the section 8 appendix report

5.6. Frequency stability VS Temperature measurement

LIMIT

2.5ppm

TEST CONFIGURATION

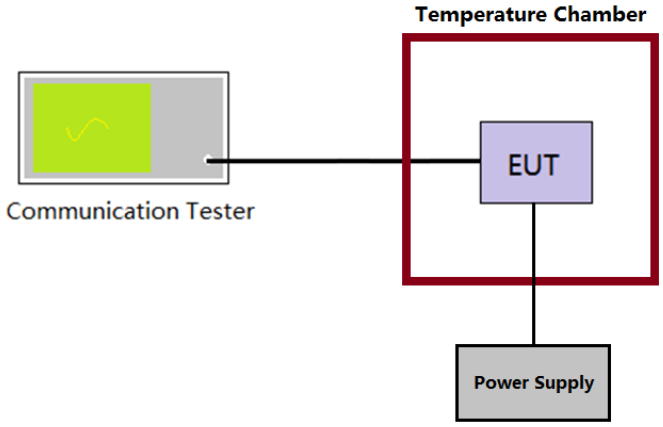

TEST PROCEDURE

1. The equipment under test was connected to an external DC power supply and input rated voltage.
2. The EUT output port was connected to communication tester.
3. The EUT was placed inside the temperature chamber.
4. Turn EUT off and set the chamber temperature to –30°C. After the temperature stabilized for approximately 30 minutes recorded the frequency.
5. Repeat step 4 measure with 10°C increased per stage until the highest temperature of +50°C reached.

TEST MODE:

Please refer to the clause 3.3

TEST RESULTS

☒ **Passed** ☐ **Not Applicable**

Refer to appendix F on the section 8 appendix report

5.7. Frequency stability VS Voltage measurement

LIMIT

2.5ppm

TEST CONFIGURATION

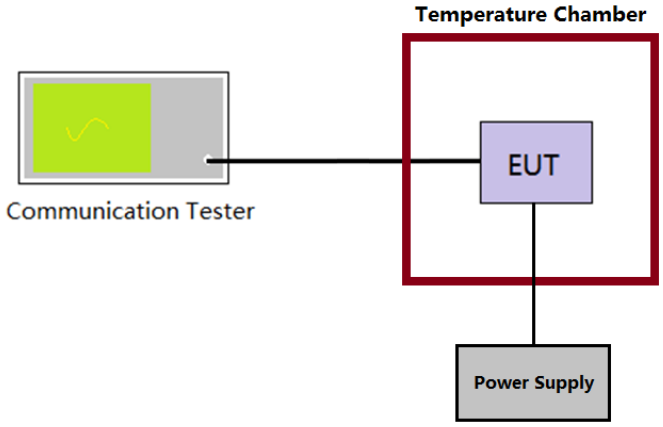

TEST PROCEDURE

1. The equipment under test was connected to an external DC power supply and input rated voltage.
2. The EUT output port was connected to communication tester.
3. The EUT was placed inside the temperature chamber at 25°C
4. The power supply voltage to the EUT was varied ±15% of the nominal value measured at the input to the EUT
5. Record the maximum frequency change.

TEST MODE:

Please refer to the clause 3.3

TEST RESULTS

☒ **Passed** ☐ **Not Applicable**

Refer to appendix F on the section 8 appendix report

5.8. ERP and EIRP

LIMIT

GSM850: 7W (38.45dBm) ERP

PCS1900: 2W (33dBm) EIRP

TEST CONFIGURATION

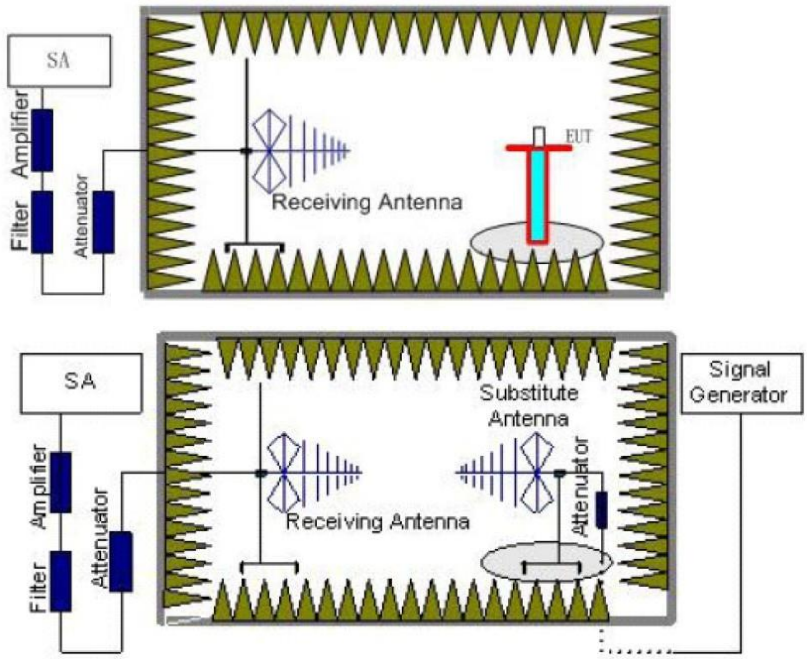

TEST PROCEDURE

1. Place the EUT in the center of the turntable.
   a) For radiated emissions measurements performed at frequencies less than or equal to 1 GHz, the EUT shall be placed on a RF-transparent table at a nominal height of 80 cm above the reference ground plane
   b) For radiated measurements performed at frequencies above 1 GHz, the EUT shall be placed on an RF transparent table at a nominal height of 1.5 m above the ground plane.
2. Unless the EUT uses an integral antenna, the EUT shall be terminated with a non-radiating transmitter load. In cases where the EUT uses an adjustable antenna, the antenna shall be adjusted through typical positions and lengths to maximize emissions levels.
3. The EUT shall be tested while operating on the frequency per manufacturer specification. Set the transmitter to operate in continuous transmit mode.
4. Receiver or Spectrum set as follow:
   Below 1GHz, RBW=100kHz, VBW=300kHz, Detector=Peak, Sweep time=Auto
   Above 1GHz, RBW=1MHz, VBW=3MHz, Detector=Peck, Sweep time=Auto
5. Each emission under consideration shall be evaluated:
   a) Raise and lower the measurement antenna from 1 m to 4 m, as necessary to enable detection of the maximum emission amplitude relative to measurement antenna height.
   b) Rotate the EUT through 360° to determine the maximum emission level relative to the axial position.
   c) Return the turntable to the azimuth where the highest emission amplitude level was observed.
   d) Vary the measurement antenna height again through 1 m to 4 m again to find the height associated with the maximum emission amplitude.
   e) Record the measured emission amplitude level and frequency
6. Repeat step 5 for each emission frequency with the measurement antenna oriented in both the horizontal and vertical polarizations to determine the orientation that gives the maximum emissions amplitude.
7. Set-up the substitution measurement with the reference point of the substitution antenna located as near as possible to where the center of the EUT radiating element was located during the initial EUT measurement.
8. Maintain the previous measurement instrument settings and test set-up, with the exception that the EUT is removed and replaced by the substitution antenna.
9. Connect a signal generator to the substitution antenna; locate the signal generator so as to minimize any

potential influences on the measurement results. Set the signal generator to the frequency where emissions are detected, and set an output power level such that the radiated signal can be detected by the measurement instrument, with sufficient dynamic range relative to the noise floor.

10. For each emission that was detected and measured in the initial test
    a) Vary the measurement antenna height between 1 m to 4 m to maximize the received (measured) signal amplitude.
    b) Adjust the signal generator output power level until the amplitude detected by the measurement instrument equals the amplitude level of the emission previously measured directly in step 5 and step 6.
    c) Record the output power level of the signal generator when equivalence is achieved in step b).
11. Repeat step 8 through step 10 with the measurement antenna oriented in the opposite polarization.
12. Calculate the emission power in dBm referenced to a half-wave dipole using the following equation:
    Pe = Ps(dBm) − cable loss (dB) + antenna gain (dBd)
    where
    Pe = equivalent emission power in dBm
    Ps = source (signal generator) power in dBm
    NOTE—dBd refers to the measured antenna gain in decibels relative to a half-wave dipole.
13. Correct the antenna gain of the substitution antenna if necessary to reference the emission power to a half-wave dipole. When using measurement antennas with the gain specified in dBi, the equivalent dipole-referenced gain can be determined from:
    gain (dBd) = gain (dBi) − 2.15 dB.
    If necessary, the antenna gain can be calculated from calibrated antenna factor information
14. Provide the complete measurement results as a part of the test report.

TEST MODE:

Please refer to the clause 3.3

TEST RESULTS

☒ **Passed** ☐ **Not Applicable**

Mode	Channel	Antenna Pol.	ERP	Limit (dBm)	Result
GSM850	128	V	27.66	<38.45	Pass
		H	18.98		
	190	V	28.18		
		H	18.95		
	251	V	27.59		
		H	19.00		
GPRS850	128	V	27.43	<38.45	Pass
		H	19.24		
	190	V	28.35		
		H	19.02		
	251	V	27.65		
		H	19.17		

Mode	Channel	Antenna Pol.	EIRP	Limit (dBm)	Result
PCS1900	512	V	16.21	<33.00	Pass
		H	26.31		
	661	V	19.87		
		H	25.46		
	810	V	21.29		
		H	26.08		
GPRS1900	512	V	16.63	<33.00	Pass
		H	26.38		
	661	V	19.95		
		H	25.42		
	810	V	21.44		
		H	26.13		

5.9. Radiated Spurious Emission

LIMIT

-13dBm

TEST CONFIGURATION

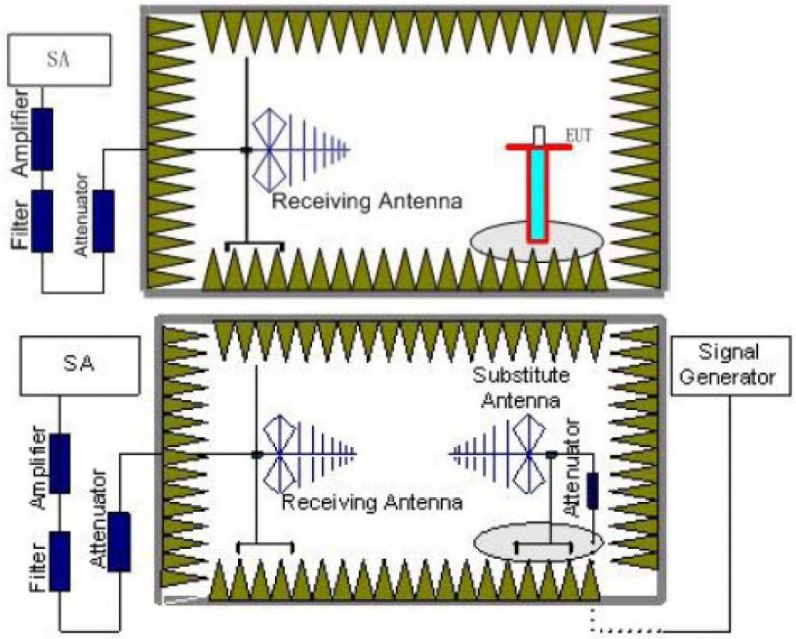

TEST PROCEDURE

1. Place the EUT in the center of the turntable.
   a) For radiated emissions measurements performed at frequencies less than or equal to 1 GHz, the EUT shall be placed on a RF-transparent table at a nominal height of 80 cm above the reference ground plane
   b) For radiated measurements performed at frequencies above 1 GHz, the EUT shall be placed on an RF transparent table at a nominal height of 1.5 m above the ground plane.
2. Unless the EUT uses an integral antenna, the EUT shall be terminated with a non-radiating transmitter load. In cases where the EUT uses an adjustable antenna, the antenna shall be adjusted through typical positions and lengths to maximize emissions levels.
3. The EUT shall be tested while operating on the frequency per manufacturer specification. Set the transmitter to operate in continuous transmit mode.
4. Receiver or Spectrum set as follow:
   Below 1GHz, RBW=100kHz, VBW=300kHz, Detector=Peak, Sweep time=Auto
   Above 1GHz, RBW=1MHz, VBW=3MHz, Detector=Peck, Sweep time=Auto
5. Each emission under consideration shall be evaluated:
   a) Raise and lower the measurement antenna from 1 m to 4 m, as necessary to enable detection of the maximum emission amplitude relative to measurement antenna height.
   b) Rotate the EUT through 360° to determine the maximum emission level relative to the axial position.
   c) Return the turntable to the azimuth where the highest emission amplitude level was observed.
   d) Vary the measurement antenna height again through 1 m to 4 m again to find the height associated with the maximum emission amplitude.
   e) Record the measured emission amplitude level and frequency
6. Repeat step 5 for each emission frequency with the measurement antenna oriented in both the horizontal and vertical polarizations to determine the orientation that gives the maximum emissions amplitude.
7. Set-up the substitution measurement with the reference point of the substitution antenna located as near as possible to where the center of the EUT radiating element was located during the initial EUT measurement.
8. Maintain the previous measurement instrument settings and test set-up, with the exception that the EUT is removed and replaced by the substitution antenna.
9. Connect a signal generator to the substitution antenna; locate the signal generator so as to minimize any potential influences on the measurement results. Set the signal generator to the frequency where emissions are detected, and set an output power level such that the radiated signal can be detected by

the measurement instrument, with sufficient dynamic range relative to the noise floor.

10. For each emission that was detected and measured in the initial test
    a) Vary the measurement antenna height between 1 m to 4 m to maximize the received (measured) signal amplitude.
    b) Adjust the signal generator output power level until the amplitude detected by the measurement instrument equals the amplitude level of the emission previously measured directly in step 5 and step 6.
    c) Record the output power level of the signal generator when equivalence is achieved in step b).
11. Repeat step 8 through step 10 with the measurement antenna oriented in the opposite polarization.
12. Calculate the emission power in dBm referenced to a half-wave dipole using the following equation:
    Pe = Ps(dBm) − cable loss (dB) + antenna gain (dBd)
    where
    Pe = equivalent emission power in dBm
    Ps = source (signal generator) power in dBm
    NOTE—dBd refers to the measured antenna gain in decibels relative to a half-wave dipole.
13. Correct the antenna gain of the substitution antenna if necessary to reference the emission power to a half-wave dipole. When using measurement antennas with the gain specified in dBi, the equivalent dipole-referenced gain can be determined from:
    gain (dBd) = gain (dBi) − 2.15 dB.
    If necessary, the antenna gain can be calculated from calibrated antenna factor information
14. Provide the complete measurement results as a part of the test report.

TEST MODE:

Please refer to the clause 3.3

TEST RESULTS

☒ **Passed** ☐ **Not Applicable**

Note: Worst case at GSM850/PCS1900

Channel: 251	Polarization: Horizontal

Mark	Frequency MHz	Reading dBm	Antenna dB	Cable dB	Preamp dB	Level dBm	Limit dBm	Over limit	Remark
1	32.99	-69.21	28.75	6.49	30.92	-64.89	-13.00	-51.89	Peak
2	632.71	-77.64	29.04	9.07	29.85	-69.38	-13.00	-56.38	Peak
3	1698.14	-62.70	36.34	11.70	27.56	-42.22	-13.00	-29.22	Peak
4	2426.82	-66.52	39.67	13.38	27.09	-40.56	-13.00	-27.56	Peak
5	3401.94	-61.74	39.61	6.70	36.76	-52.19	-13.00	-39.19	Peak
6	8795.72	-73.27	48.81	11.94	34.88	-47.40	-13.00	-34.40	Peak

Channel: 251	Polarization: Vertical

Mark	Frequency MHz	Reading dBm	Antenna dB	Cable dB	Preamp dB	Level dBm	Limit dBm	Over limit	Remark
1	49.60	-64.77	20.52	6.64	30.86	-68.47	-13.00	-55.47	Peak
2	598.09	-73.33	27.53	8.94	29.88	-66.74	-13.00	-53.74	Peak
3	1698.14	-64.35	36.23	11.70	27.56	-43.98	-13.00	-30.98	Peak
4	2426.82	-61.88	39.30	13.38	27.09	-36.29	-13.00	-23.29	Peak
5	5945.86	-67.52	44.58	9.58	35.04	-48.40	-13.00	-35.40	Peak
6	11469.17	-72.24	53.18	12.72	36.39	-42.73	-13.00	-29.73	Peak

Channel: 190	Polarization: Horizontal

Mark	Frequency MHz	Reading dBm	Antenna dB	Cable dB	Preamp dB	Level dBm	Limit dBm	Over limit	Remark
1	32.99	-69.51	28.75	6.49	30.92	-65.19	-13.00	-52.19	Peak
2	659.98	-78.27	28.24	9.11	29.79	-70.71	-13.00	-57.71	Peak
3	1674.06	-64.29	36.25	11.68	27.76	-44.12	-13.00	-31.12	Peak
4	2426.82	-61.37	39.67	13.38	27.09	-35.41	-13.00	-22.41	Peak
5	5017.92	-65.95	44.32	8.84	35.29	-48.08	-13.00	-35.08	Peak
6	9200.18	-64.14	49.23	11.47	35.93	-39.37	-13.00	-26.37	Peak

Channel: 190	Polarization: Vertical

Mark	Frequency MHz	Reading dBm	Antenna dB	Cable dB	Preamp dB	Level dBm	Limit dBm	Over limit	Remark
1	49.60	-64.56	20.52	6.64	30.86	-68.26	-13.00	-55.26	Peak
2	703.10	-76.35	28.98	9.27	29.64	-67.74	-13.00	-54.74	Peak
3	1674.06	-64.17	36.17	11.68	27.76	-44.08	-13.00	-31.08	Peak
4	2440.18	-63.17	39.28	13.47	26.97	-37.39	-13.00	-24.39	Peak
5	5017.92	-68.40	44.46	8.84	35.29	-50.39	-13.00	-37.39	Peak
6	9213.53	-72.47	49.74	11.52	35.98	-47.19	-13.00	-34.19	Peak

Channel: 128	Polarization: Horizontal

Mark	Frequency MHz	Reading dBm	Antenna dB	Cable dB	Preamp dB	Level dBm	Limit dBm	Over limit	Remark
1	32.99	-69.05	28.75	6.49	30.92	-64.73	-13.00	-51.73	Peak
2	730.83	-78.22	29.36	9.32	29.63	-69.17	-13.00	-56.17	Peak
3	1650.32	-62.95	36.16	11.67	27.96	-43.08	-13.00	-30.08	Peak
4	2426.82	-62.18	39.67	13.38	27.09	-36.22	-13.00	-23.22	Peak
5	4945.67	-68.12	44.17	8.76	35.20	-50.39	-13.00	-37.39	Peak
6	9067.72	-68.10	48.74	11.34	36.13	-44.15	-13.00	-31.15	Peak

Channel: 128	Polarization: Vertical

Mark	Frequency MHz	Reading dBm	Antenna dB	Cable dB	Preamp dB	Level dBm	Limit dBm	Over limit	Remark
1	49.60	-64.38	20.52	6.64	30.86	-68.08	-13.00	-55.08	Peak
2	598.09	-75.18	27.53	8.94	29.88	-68.59	-13.00	-55.59	Peak
3	1650.32	-64.07	36.12	11.67	27.96	-44.24	-13.00	-31.24	Peak
4	2459.02	-65.73	39.27	13.60	26.80	-39.66	-13.00	-26.66	Peak
5	5767.51	-67.39	44.09	9.58	34.86	-48.58	-13.00	-35.58	Peak
6	9067.72	-65.39	49.00	11.34	36.13	-41.18	-13.00	-28.18	Peak

Remark:
1. The emission behaviour belongs to narrowband spurious emission.
2. The emission levels of not record in the report are very lower than the limit and not show in test report.

Channel: 810	Polarization: Horizontal

Mark	Frequency MHz	Reading dBm	Antenna dB	Cable dB	Preamp dB	Level dBm	Limit dBm	Over limit	Remark
1	72.26	-66.10	15.48	6.80	30.87	-74.69	-13.00	-61.69	Peak
2	806.46	-76.70	29.95	9.58	29.41	-66.58	-13.00	-53.58	Peak
3	1333.54	-69.16	37.02	12.78	28.96	-48.32	-13.00	-35.32	Peak
4	2426.82	-63.79	39.67	13.38	27.09	-37.83	-13.00	-24.83	Peak
5	3820.45	-59.52	42.09	7.15	36.99	-47.27	-13.00	-34.27	Peak
6	9792.18	-73.31	50.57	11.54	36.14	-47.34	-13.00	-34.34	Peak

Channel: 810	Polarization: Vertical

Mark	Frequency MHz	Reading dBm	Antenna dB	Cable dB	Preamp dB	Level dBm	Limit dBm	Over limit	Remark
1	89.87	-78.86	28.24	6.92	30.75	-74.45	-13.00	-61.45	Peak
2	832.39	-69.58	30.16	9.64	29.34	-59.12	-13.00	-46.12	Peak
3	1582.84	-68.62	37.76	11.66	28.27	-47.47	-13.00	-34.47	Peak
4	2429.48	-64.54	39.29	13.40	27.07	-38.92	-13.00	-25.92	Peak
5	3820.45	-55.47	41.97	7.15	36.99	-43.34	-13.00	-30.34	Peak
6	9749.67	-72.17	50.16	11.64	36.34	-46.71	-13.00	-33.71	Peak

Channel: 661	Polarization: Horizontal

Mark	Frequency MHz	Reading dBm	Antenna dB	Cable dB	Preamp dB	Level dBm	Limit dBm	Over limit	Remark
1	72.26	-66.36	15.48	6.80	30.87	-74.95	-13.00	-61.95	Peak
2	800.80	-78.06	29.96	9.56	29.43	-67.97	-13.00	-54.97	Peak
3	1336.47	-69.28	37.03	12.77	28.96	-48.44	-13.00	-35.44	Peak
4	2442.87	-61.17	39.58	13.49	26.95	-35.05	-13.00	-22.05	Peak
5	3759.98	-57.49	42.23	7.08	37.12	-45.30	-13.00	-32.30	Peak
6	8808.49	-73.13	48.82	11.94	34.91	-47.28	-13.00	-34.28	Peak

Channel: 661	Polarization: Vertical

Mark	Frequency MHz	Reading dBm	Antenna dB	Cable dB	Preamp dB	Level dBm	Limit dBm	Over limit	Remark
1	89.87	-76.90	28.24	6.92	30.75	-72.49	-13.00	-59.49	Peak
2	703.10	-68.94	28.98	9.27	29.64	-60.33	-13.00	-47.33	Peak
3	1498.24	-68.26	37.76	11.79	28.64	-47.35	-13.00	-34.35	Peak
4	2426.82	-62.41	39.30	13.38	27.09	-36.82	-13.00	-23.82	Peak
5	3759.98	-53.56	42.14	7.08	37.12	-41.46	-13.00	-28.46	Peak
6	10467.72	-72.81	52.21	12.46	37.14	-45.28	-13.00	-32.28	Peak

Channel: 512	Polarization: Horizontal

Mark	Frequency MHz	Reading dBm	Antenna dB	Cable dB	Preamp dB	Level dBm	Limit dBm	Over limit	Remark
1	31.96	-71.82	28.77	6.47	30.92	-67.50	-13.00	-54.50	Peak
2	800.80	-76.51	29.96	9.56	29.43	-66.42	-13.00	-53.42	Peak
3	1701.87	-68.91	36.36	11.70	27.53	-48.38	-13.00	-35.38	Peak
4	2434.83	-62.68	39.63	13.43	27.02	-36.64	-13.00	-23.64	Peak
5	3700.48	-51.56	42.29	7.01	37.05	-39.31	-13.00	-26.31	Peak
6	7981.27	-72.64	48.11	10.89	33.31	-46.95	-13.00	-33.95	Peak

Channel: 512	Polarization: Vertical

Mark	Frequency MHz	Reading dBm	Antenna dB	Cable dB	Preamp dB	Level dBm	Limit dBm	Over limit	Remark
1	85.85	-75.51	26.65	6.89	30.79	-72.76	-13.00	-59.76	Peak
2	703.10	-66.39	28.98	9.27	29.64	-57.78	-13.00	-44.78	Peak
3	1467.29	-66.39	37.76	11.99	28.77	-45.41	-13.00	-32.41	Peak
4	2434.83	-63.96	39.29	13.43	27.02	-38.26	-13.00	-25.26	Peak
5	3700.48	-53.14	42.31	7.01	37.05	-40.87	-13.00	-27.87	Peak
6	8757.54	-73.43	49.16	11.96	34.81	-47.12	-13.00	-34.12	Peak

Remark:
1. The emission behaviour belongs to narrowband spurious emission.
2. The emission levels of not record in the report are very lower than the limit and not show in test report.

6. TEST SETUP PHOTOS OF THE EUT

Radiated emission:

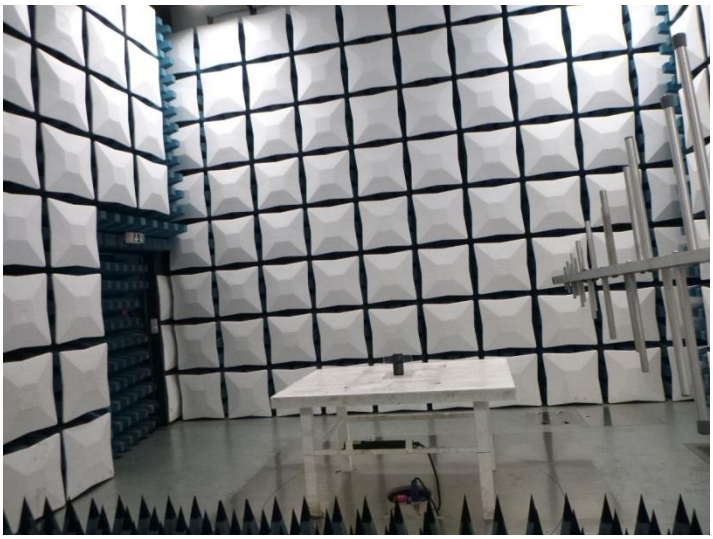

7. EXTERNAL AND INTERNAL PHOTOS OF THE EUT

External photos of the EUT

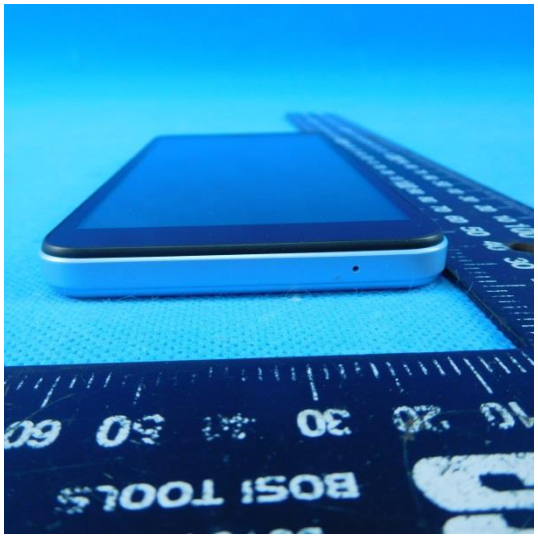
BOSI TOOLS

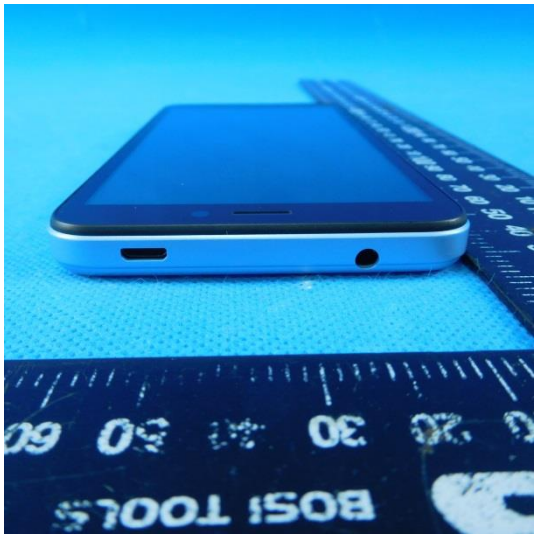
BOSI TOOLS

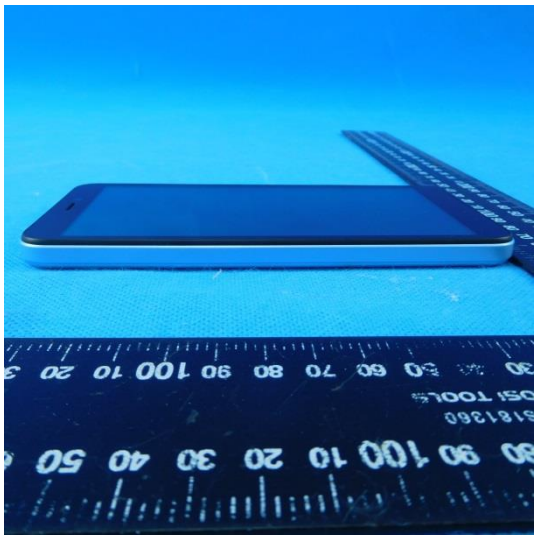

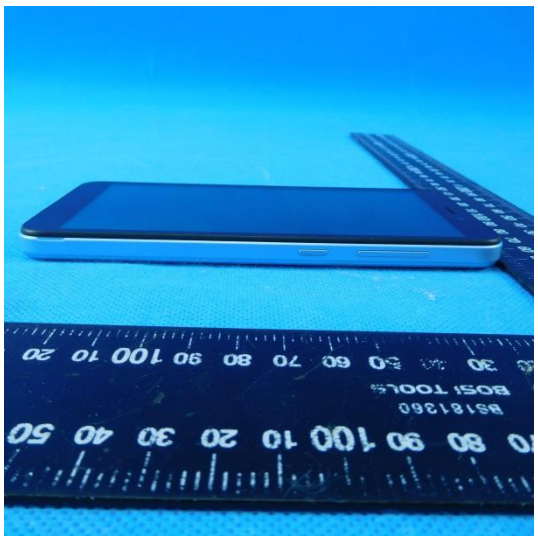

TRAVEL CHARGER
MODEL: TN-050120U9
INPUT: 100-240V~50/60Hz 0.20A
OUTPUT: 5.0V ⎓ 1.2A 6.0W
Chongqing Lianmao Electronics Co., Ltd.
Made in China

Internal photos of the EUT

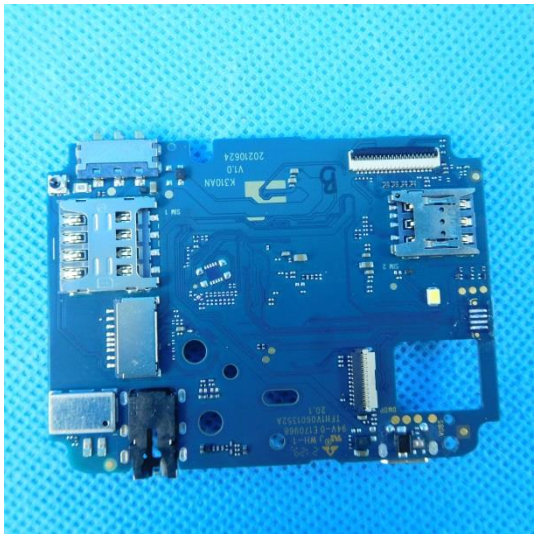

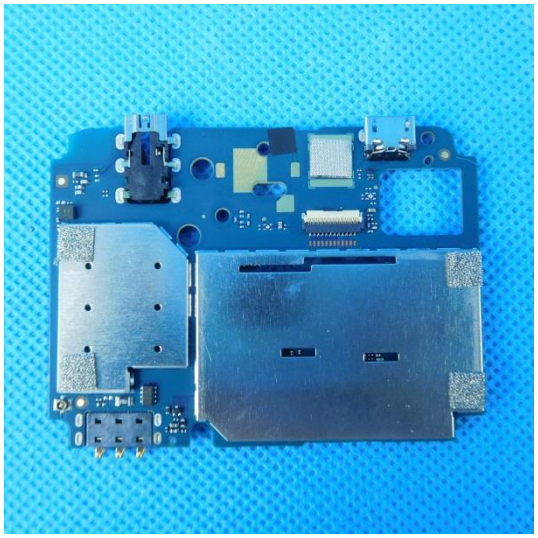

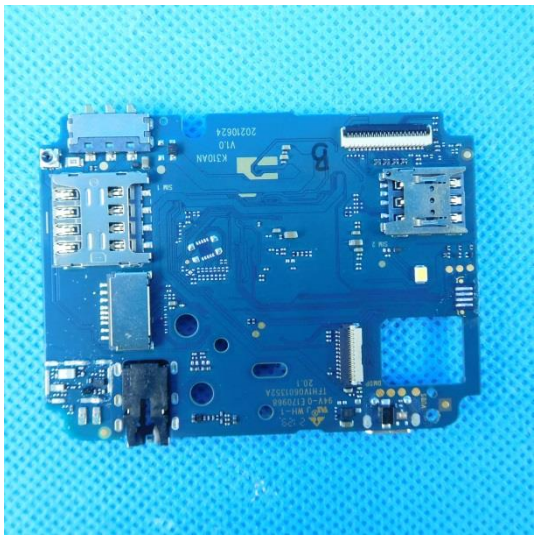

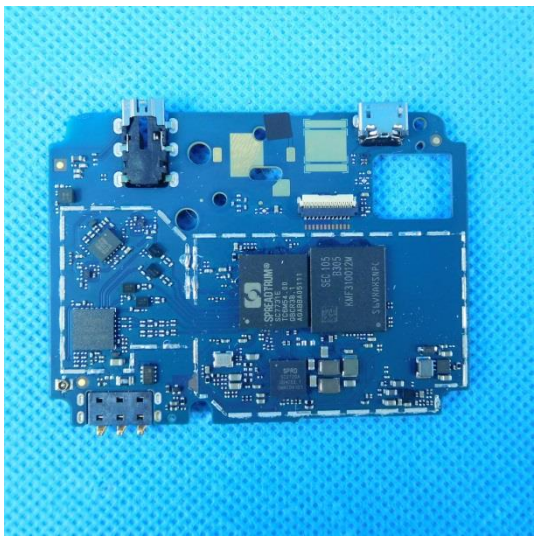

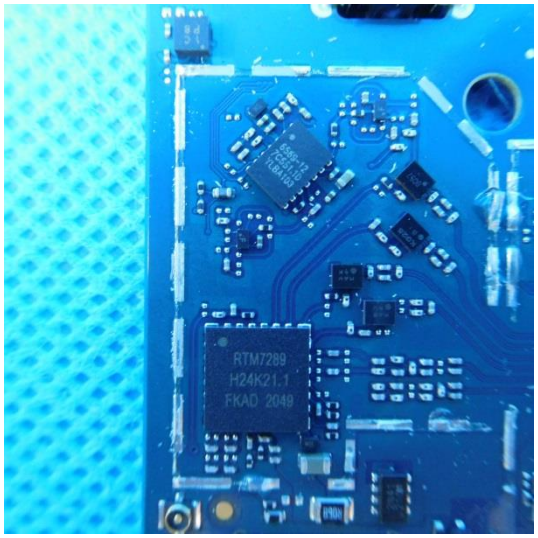
RTM7289
H24K21.1
FKAD 2049

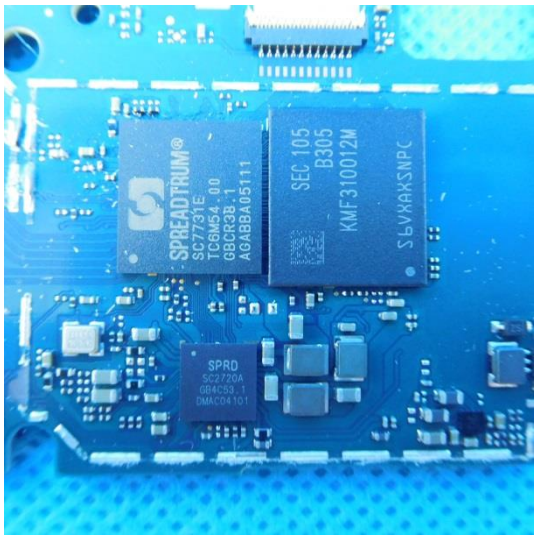
SPREADTRUM®
SC7731E
TC6M54.00
GBCR3B.1
A6ABBA05111
SEC 105
B305
KMF310012M
S6VKAKSNPC
SPRD
SC2720A
GD4C53.1
DMAC04101

8. APPENDIX REPORT