RayBit

SC1 Streaming Camera

Quick Start Guide

WHAT'S IN THE BOX

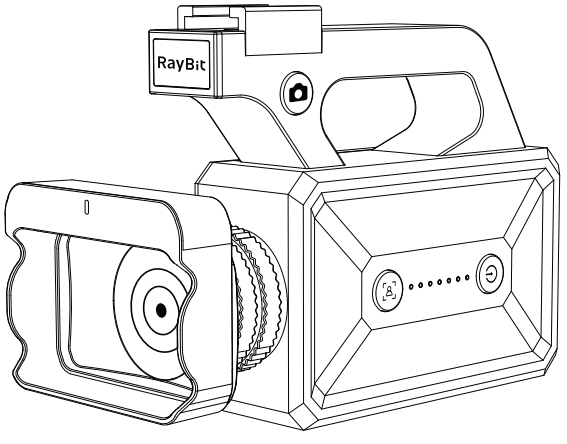

Live Streaming Camera X 1

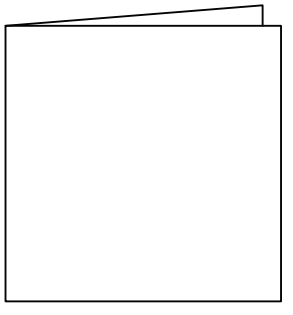

User Manual X 1

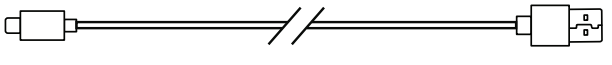

USB Cable X 1

OVERVIEW

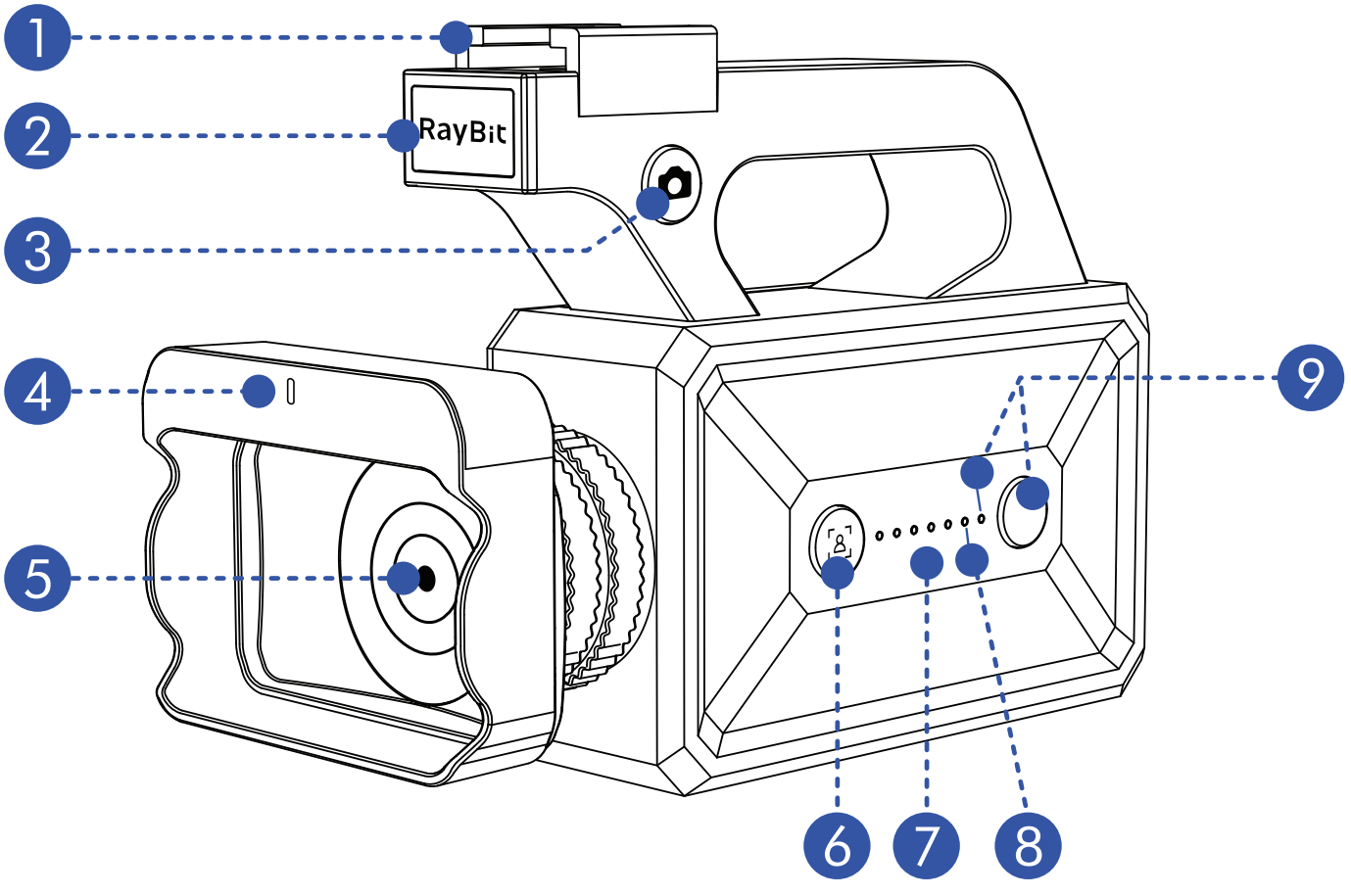

1. Cold Shoe Clamp
2. Streaming Indicator
3. Take Photo/Video
4. AI indicator
5. FULL HD Camera
6. AI ON/OFF
7. Battery
8. WiFi
9. Bluetooth

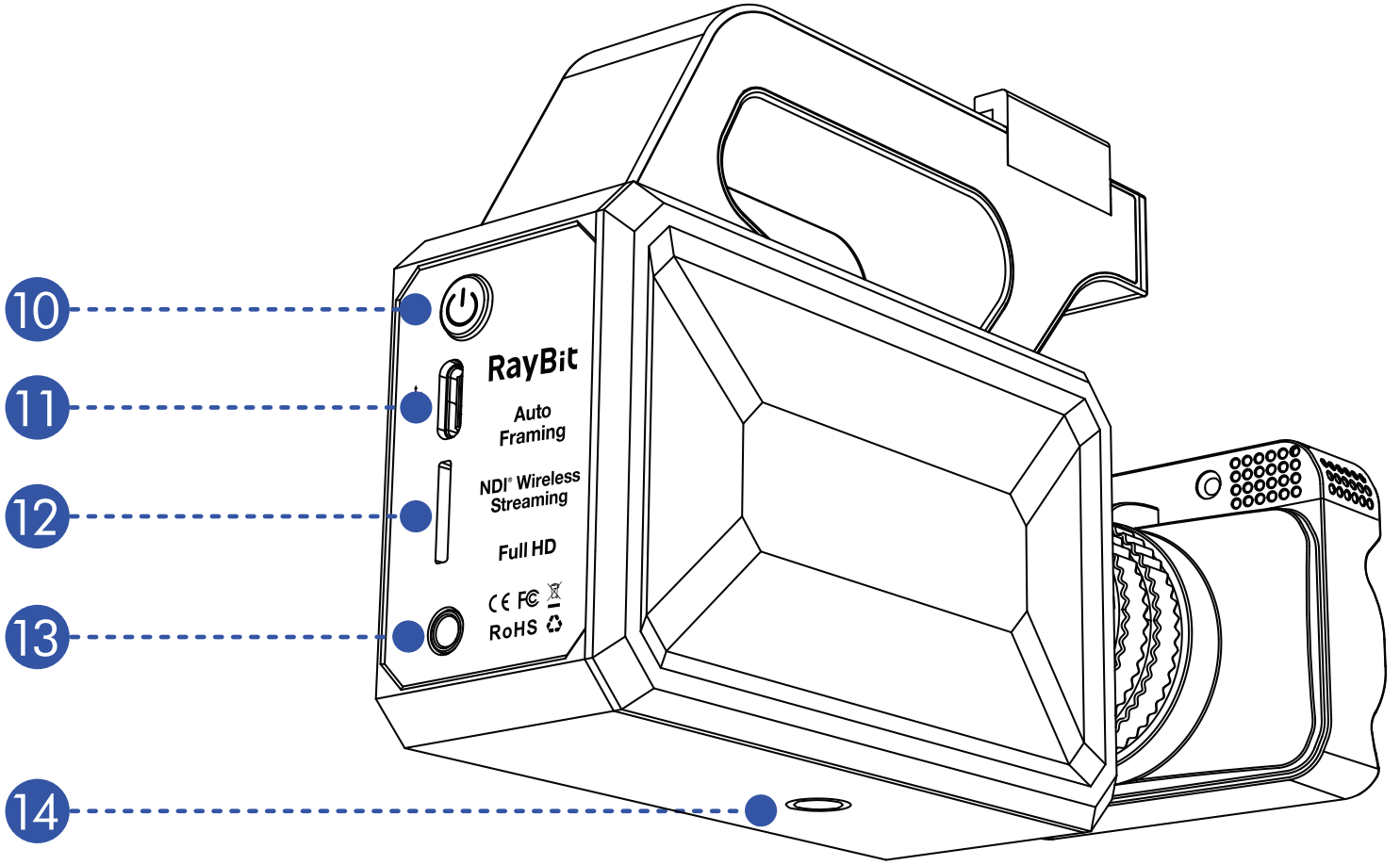

10. Power

11. Type-C Port

12. Micro SD Slot

13. Line in

14. 1/4 UNC threaded hole

EASY SET-UP

1. Install it on the bracket through the screw hole at the bottom of the camera.

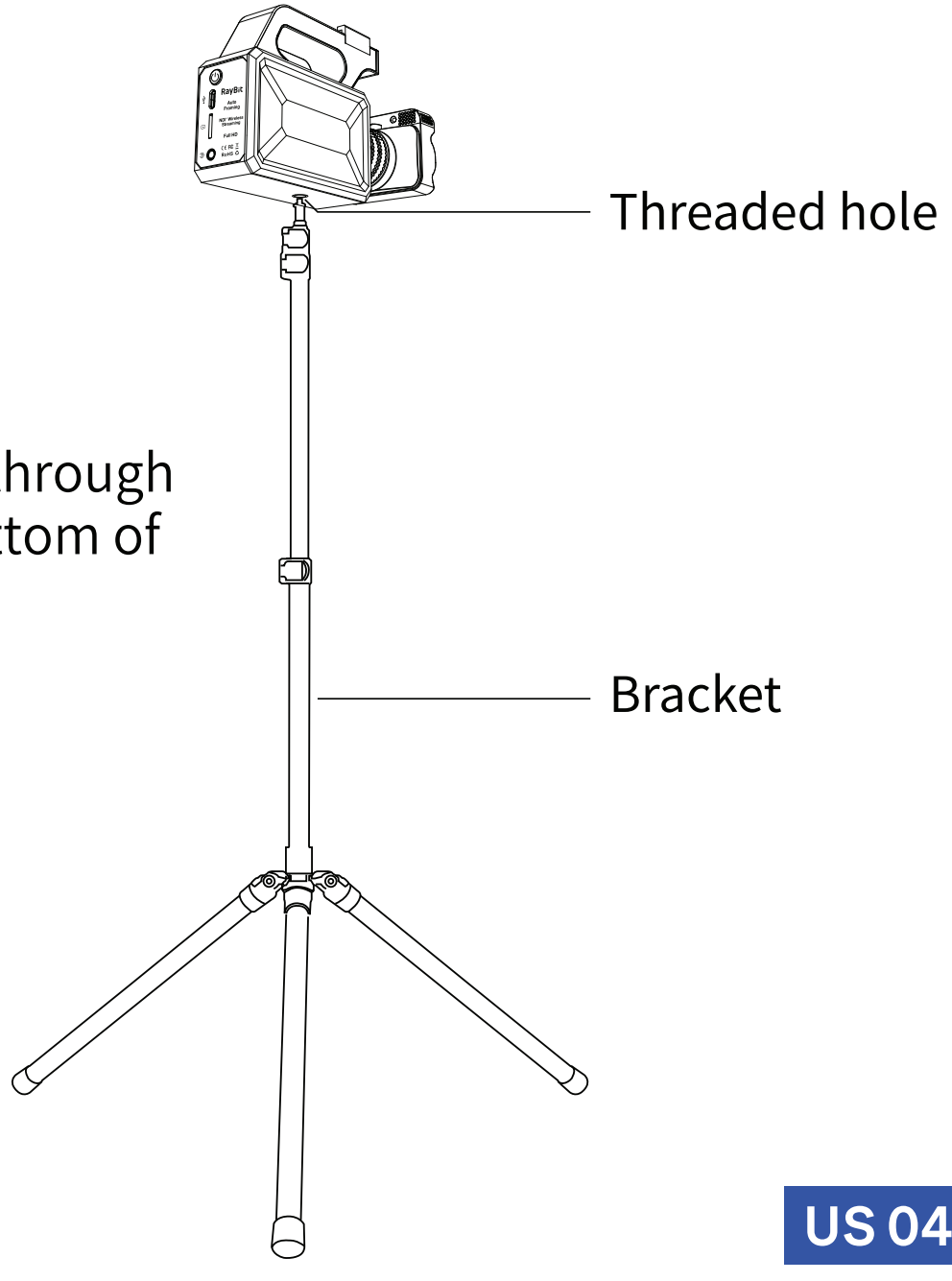

2. Press the power button to turn on.

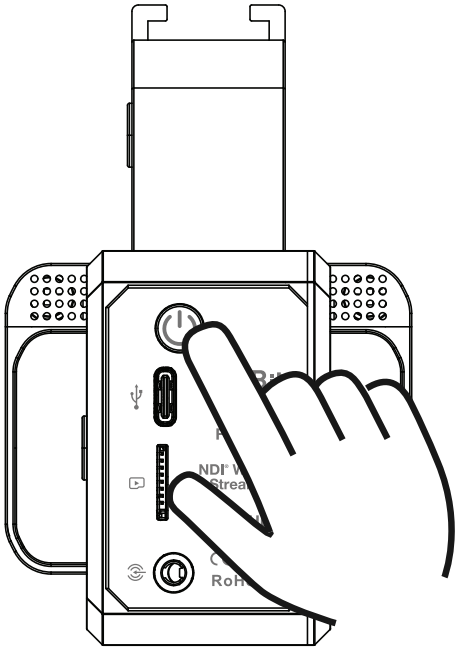

3. Press the Bluetooth button to enable the Bluetooth connection.

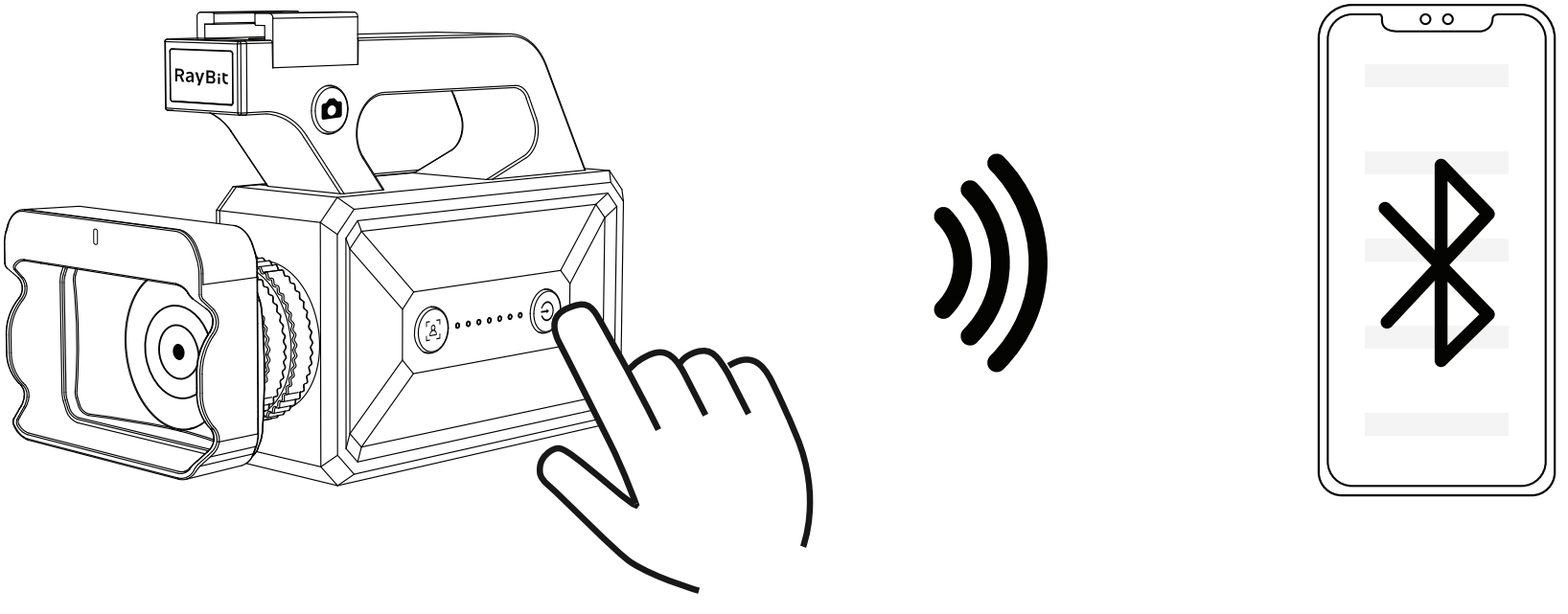

3.1 Download the RayBit SC1 app.

Step 1: Click Allow access to location, After accessing Bluetooth, proceed to the next step.

Step 2: discovery of SC1 devices, to set it up.

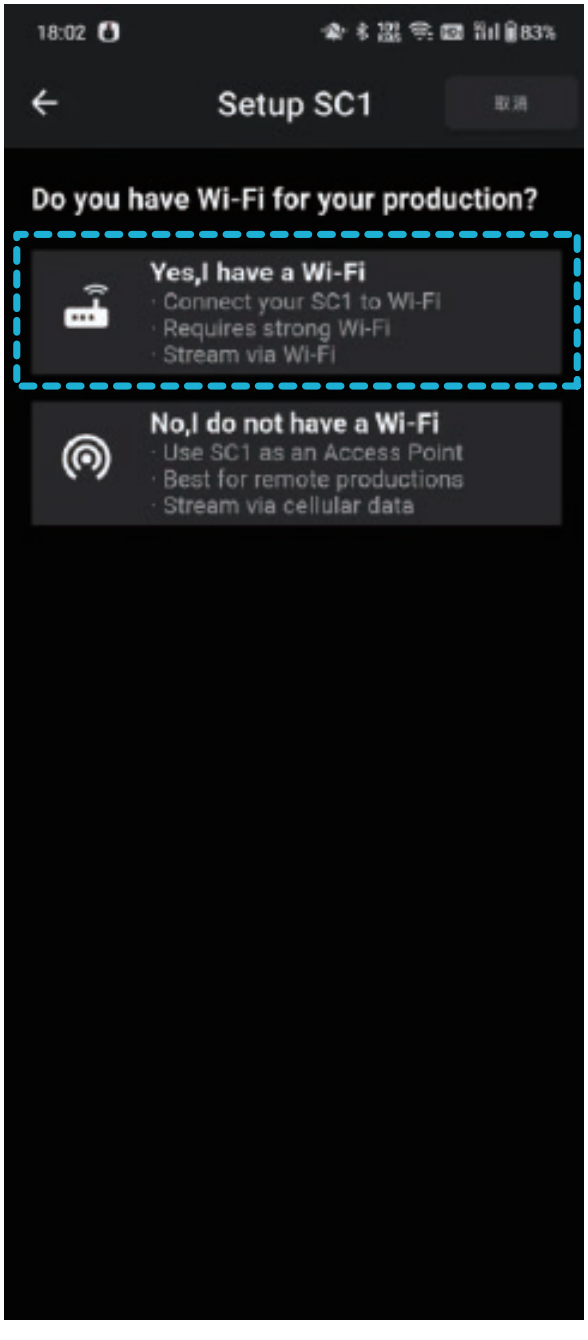

Step 3: Click to enter the WIFI interface.

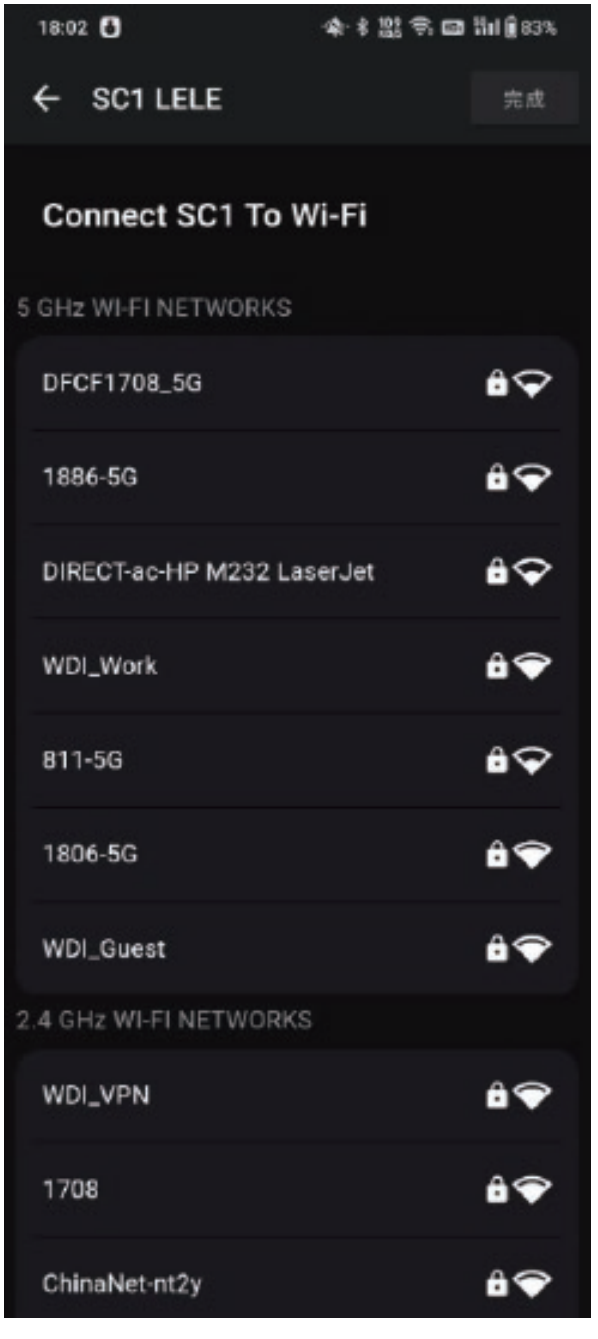

Step 4: Select the WIFI account.

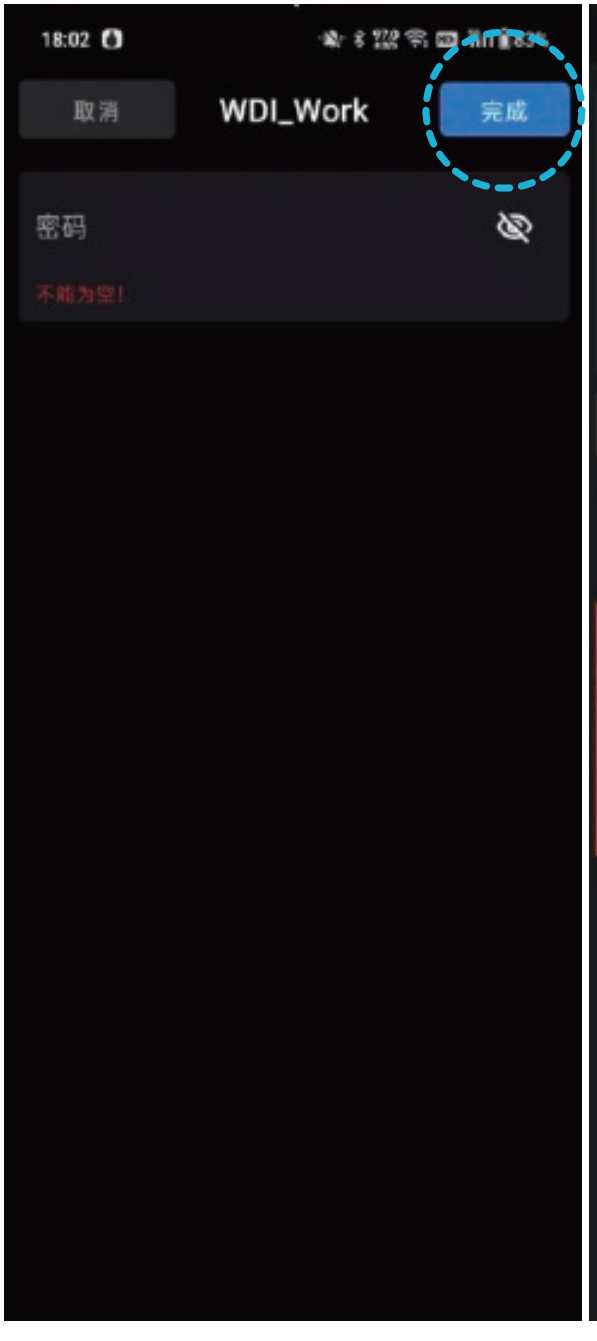

Step 5: After entering the WIFI password,
Click Done.

Step 6: Start streaming or recording.

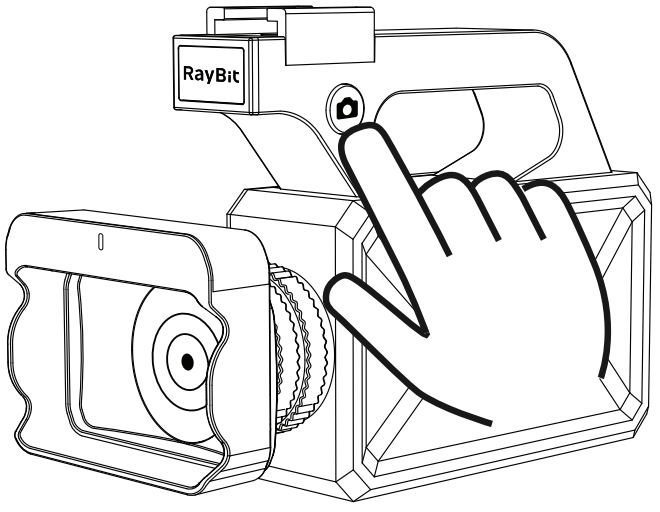

4. Press the "Photo" button to take photos and record videos.

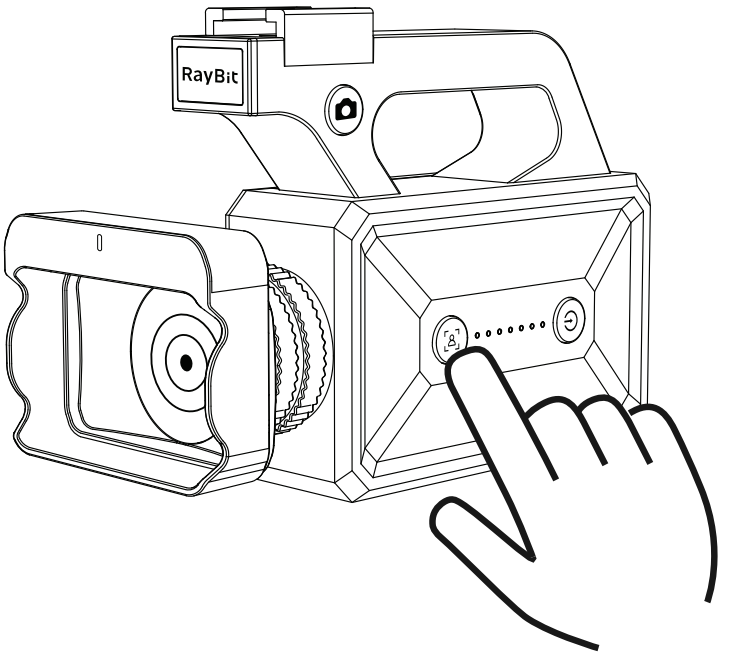

5. Press "AI" button to turn on camera AI face tracking function.

CHARGE

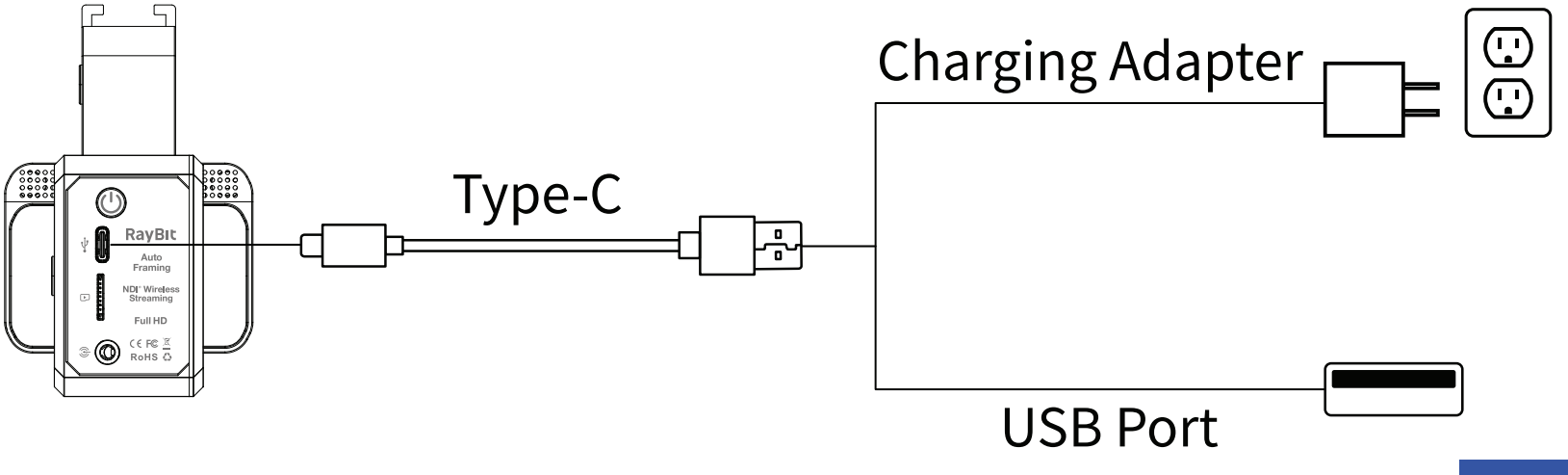

RayBit

Scan the OR code or visit our link to download the latest manual or watch the installation video.

raybit.com/pages/download

FCC Warnning:

This equipment has been tested and found to comply with the limits for a Class B digital device, pursuant to part 15 of the FCC Rules. These limits are designed to provide reasonable protection againstharmful interference in a residential installation. This equipment generates, uses and can radiateradio frequency energy and, if not installed and used in accordance with the instructions, maycause harmful interference to radio communications. However, there is no guarantee thatinterference will not occur in a particular installation. If this equipment does cause harmfulinterference to radio or television reception, which can be determined by turning the equipmentoff and on, the user is encouraged to try to correct the interference by one or more of thefollowing measures:

- Reorient or relocate the receiving antenna.
- Increase the separation between the equipment and receiver.
- Connect the equipment into an outlet on a circuit different from that to which the receiver is connected.
- Consult the dealer or an experienced radio/TV technician for help.

Caution: Any changes or modifications to this device not explicitly approved by manufacturer could void your authority to operate this equipment.

This device complies with part 15 of the FCC Rules. Operation is subject to the following two conditions:

(1)This device may not cause harmful interference, and (2) this device must accept any interference received, including interference that may cause undesired operation.

This equipment complies with FCC radiation exposure limits set forth for an uncontrolled environment. This equipment should be installed and operated with minimum distance 20cm between the radiator and your body.