# DYNAMIC FREQUENCY SELECTION

# DFS Test Report

| | | |
|---|---|---|
| APPLICANT | : | Metacinnabar LLC |
| EQUIPMENT | : | Wireless Tablet |
| MODEL NAME | : | P8AT8Z |
| FCC ID | : | 2AZSI-7828 |
| STANDARD | : | FCC Part 15 Subpart E |
| CLASSIFICATION | : | (NII) Unlicensed National Information Infrastructure |
| TEST DATE(S) | : | Oct. 24, 2021 |

**We, Sporton International Inc. (Kunshan), would like to declare that the tested sample has been evaluated in accordance with the procedures and shown to be compliant with the applicable technical standards.**

**The test results in this report apply exclusively to the tested model / sample. Without written approval of Sporton International Inc. (Kunshan), the test report shall not be reproduced except in full.**

Jason Jia

**Reviewed by: Jason Jia / Supervisor**

Alexwang

**Approved by: Alex Wang / Manager**

ACCREDITED
Cert #5145.02

***Sporton International Inc. (Kunshan)***
***No. 1098, Pengxi North Road, Kunshan Economic Development Zone Jiangsu Province 215300 People's Republic of China***

# TABLE OF CONTENTS

**REVISION HISTORY** ..... **3**

**SUMMARY OF DYNAMIC FREQUENCY SELECTION TEST** ..... **4**

**1 GENERAL DESCRIPTION** ..... **5**

1.1. Applicant ..... 5
1.2. Feature of Equipment Under Test ..... 5
1.3. Product Specification of Equipment Under Test ..... 5
1.4. Modification of EUT ..... 5
1.5. Testing Site ..... 6
1.6. Applied Standards ..... 6
1.7. Support Unit used in test configuration and system ..... 6

**2 REQUIREMENTS AND PARAMETERS FOR DFS TEST** ..... **7**

2.1. Summary of Dynamic Frequency Selection Test ..... 7
2.2. Applicability of DFS Requirements ..... 8
2.3. Interference Threshold values, Master or Client incorporating In-Service Monitoring ..... 10
2.4. DFS Response requirement values ..... 11
2.5. Short Pulse Radar Test Waveforms ..... 12

**3 CALIBRATION SETUP AND DFS TEST RESULTS** ..... **13**

3.1 Calibration of Radar Waveform ..... 13
3.2 In-Service Monitoring: Channel Move Time, Channel Closing Transmission Time and Non-Occupancy Period ..... 15

**4 LIST OF MEASURING EQUIPMENT** ..... **21**

# REVISION HISTORY

| REPORT NO. | VERSION | DESCRIPTION | ISSUED DATE |
|---|---|---|---|
| FZ170813-01 | Rev. 01 | Initial issue of report | Jan. 27, 2022 |
| | | | |
| | | | |
| | | | |
| | | | |
| | | | |
| | | | |
| | | | |
| | | | |
| | | | |
| | | | |
| | | | |
| | | | |
| | | | |
| | | | |

# SUMMARY OF DYNAMIC FREQUENCY SELECTION TEST

| UNII | Bandwidth and Channel | Description | Measured | Limit | Result |
|---|---|---|---|---|---|
| U-NII-2A 5250-5350MHz & U-NII-2C 5470-5725MHz | 80MHz (CH106) 5530MHz | Channel Move Time | 572.419ms | 10 sec | Pass |
| | | Channel Closing Transmission time | <200ms + 6.8ms (aggregate) | 200 ms + aggregate of 60 ms over remaining 10 s period | Pass |
| | | Non-Occupancy Period and Client Beacon Test | No transmission or Beacons occurred | 30 minutes | Pass |

Note: Since the product is client without radar detection function, only Channel Move Time, Channel Closing Transmission Time and Non-Occupancy Period Test are required to be performed.

| Comments and Explanations: |
|---|
| The declared of product specification for EUT presented in the report are provided by the manufacturer, and the manufacturer takes all the responsibilities for the accuracy of product specification. |

# 1 General Description

## 1.1. Applicant

**Metacinnabar LLC**
125 South Wacker Drive Chicago, IL 60606

## 1.2. Feature of Equipment Under Test

| Product Feature | |
|---|---|
| **Equipment** | Wireless Tablet |
| **Model Name** | P8AT8Z |
| **FCC ID** | 2AZSI-7828 |

**Remark:** The above EUT's information was declared by manufacturer. Please refer to the specifications or user's manual for more detailed description.

## 1.3. Product Specification of Equipment Under Test

| Product Specification subjective to this standard | |
|---|---|
| **DFS Function** | Client without radar detection function |
| **Tx/Rx Channel Frequency Range** | 5260 MHz ~ 5320 MHz<br>5500 MHz ~ 5720 MHz |
| **EUT support WLAN function** | 802.11a<br>802.11n HT20<br>802.11n HT40<br>802.11ac VHT20<br>802.11ac VHT40<br>802.11ac VHT80 |
| **Type of Modulation** | 802.11a/n : OFDM (BPSK / QPSK / 16QAM / 64QAM)<br>802.11ac : OFDM (BPSK / QPSK / 16QAM / 64QAM / 256QAM) |

## 1.4. Modification of EUT

No modifications are made to the EUT during all test items.

## 1.5. Testing Site

**<FCC>-KS**

Sporton International Inc. (Kunshan) is accredited to ISO/IEC 17025:2017 by American Association for Laboratory Accreditation with Certificate Number 5145.02.

| | | | |
|---|---|---|---|
| **Test Firm** | Sporton International Inc. (Kunshan) | | |
| **Test Site Location** | No. 1098, Pengxi North Road, Kunshan Economic Development Zone<br>Jiangsu Province 215300 People's Republic of China<br>TEL : +86-512-57900158<br>FAX : +86-512-57900958 | | |
| **Test Site No.** | **Sporton Site No.** | **FCC Designation No.** | **FCC Test Firm Registration No.** |
| | DFS01-KS | CN1257 | 314309 |

## 1.6. Applied Standards

According to the specifications of the manufacturer, the EUT must comply with the requirements of the following standards:

- FCC Part 15 Subpart E
- FCC KDB 905462 D02 UNII DFS Compliance Procedures New Rules v02
- FCC KDB 905462 D03 UNII Clients Without Radar Detection New Rules v01r02

**Remark:** All test items were verified and recorded according to the standards and without any deviation during the test.

## 1.7. Support Unit used in test configuration and system

| Item | Equipment | Trade Name | Model Name | FCC ID | HW / FW Version | Power Cord |
|---|---|---|---|---|---|---|
| 1. | WLAN AP | ASUS | RT-AX88U | MSQ-RTAXHP00 | FW: 3.0.0.4.384_4730-g8g74d3c | Unshielded, 1.8 m |
| 2. | Notebook | Lenovo | Edge E335 | PPD-AR5B95 | N/A | AC I/P: Unshielded, 1.2 m<br>DC O/P: Shielded, 1.8 m |

# 2 Requirements and Parameters for DFS Test

## 2.1. Summary of Dynamic Frequency Selection Test

| Bandwidth and Channel | Test Items | Limit |
|---|---|---|
| **80MHz 5530MHz (CH106)** | | |
| 80MHz (CH106) 5530MHz | Channel Move Time | 10 sec |
| | Channel Closing Transmission time | 200 ms + aggregate of 60 ms over remaining 10 s period |
| | Non-Occupancy Period and Client Beacon Test | 30 minutes |

## 2.2. Applicability of DFS Requirements

EUT is client and operates as client without radar detection function.

### Table 1: Applicability of DFS Requirements Prior to Use of a Channel

| Requirement | Operational Mode | | |
|---|---|---|---|
| | Master | Client Without Radar Detection | Client With Radar Detection |
| Non-Occupancy Period | Yes | Not required | Yes |
| DFS Detection Threshold | Yes | Not required | Yes |
| Channel Availability Check Time | Yes | Not required | Not required |
| U-NII Detection Bandwidth | Yes | Not required | Yes |

### Table 2: Applicability of DFS requirements during normal operation

| Requirement | Operational Mode | | |
|---|---|---|---|
| | Master | Client Without Radar Detection | Client With Radar Detection |
| DFS Detection Threshold | Yes | Not required | Yes |
| Channel Closing Transmission Time | Yes | Yes | Yes |
| Channel Move Time | Yes | Yes | Yes |
| U-NII Detection Bandwidth | Yes | Not required | Yes |
| Client Beacon Test | N/A | Yes | Yes |

| Additional requirements for devices with multiple bandwidth modes | Operational Mode | |
|---|---|---|
| | Master or Client With Radar Detection | Client Without Radar Detection |
| U-NII Detection Bandwidth and Statistical Performance Check | All BW modes must be tested | Not required |
| Channel Move Time and Channel Closing Transmission Time | Test using widest BW mode available | Test using the widest BW mode available for the link |
| All other tests | Any single BW mode | Not required |

**Note**

Frequencies selected for statistical performance check (Section 7.8.4) should include several frequencies within the radar detection bandwidth and frequencies near the edge of the radar detection bandwidth. For 802.11 devices it is suggested to select frequencies in each of the bonded 20 MHz channels and the channel center frequency.

## 2.3. Interference Threshold values, Master or Client incorporating In-Service Monitoring

| Maximum Transmit Power | Value (see notes 1 and 2) |
|---|---|
| ≥ 200 milliwatt | -64 dBm |
| < 200 milliwatt | -62 dBm |
| **Note 1:** This is the level at the input of the receiver assuming a 0 dBi receive antenna.<br>**Note 2:** Throughout these test procedures an additional 1 dB has been added to the amplitude of the test transmission waveforms to account for variations in measurement equipment. This will ensure that the test signal is at or above the detection threshold level to trigger a DFS response. | |

The radar *Detection Threshold*, lowest antenna gain is the parameter of Interference *radar DFS detection threshold*, The Interference *Detection Threshold* is the *( -62dBm)* + *(0)* [dBi]+ 1 dB= -61 dBm.

## 2.4. DFS Response requirement values

| Parameter | Value |
|---|---|
| *Non-occupancy period* | Minimum 30 minutes |
| *Channel Availability Check Time* | 60 seconds |
| *Channel Move Time* | 10 seconds See Note 1. |
| *Channel Closing Transmission Time* | 200 milliseconds + an aggregate of 60 milliseconds over remaining 10 second period. See Notes 1 and 2. |
| *U-NII Detection Bandwidth* | Minimum 100% of the 99% power bandwidth<br>See Note 3. |

**Note 1:** The instant that the *Channel Move Time* and the *Channel Closing Transmission Time* begins is as follows:

- For the Short pulse radar Test Signals this instant is the end of the *Burst*.
- For the Frequency Hopping radar Test Signal, this instant is the end of the last radar *Burst* generated.
- For the Long Pulse radar Test Signal this instant is the end of the 12 second period defining the radar transmission.

**Note 2:** The *Channel Closing Transmission Time* is comprised of 200 milliseconds starting at the beginning of the *Channel Move Time* plus any additional intermittent control signals required to facilitate *Channel* changes (an aggregate of 60 milliseconds) during the remainder of the 10 second period. The aggregate duration of control signals will not count quiet periods in between transmissions.

**Note 3:** During the *U-NII Detection Bandwidth* detection test, radar type 0 is used and for each frequency step the minimum percentage of detection is 90%. Measurements are performed with no data traffic.

## 2.5. Short Pulse Radar Test Waveforms

As the EUT is a Client Device with no Radar Detection, only one type radar pulse is required for the testing. Radar Pulse type 0 was used in the evaluation of the Client device for the purpose of measuring the Channel Move Time and the Channel Closing Transmission Time.

| Radar Type | Pulse Width (μsec) | PRI (μsec) | Number of Pulses | Minimum Percentage of Successful Detection | Minimum Trials |
|---|---|---|---|---|---|
| 0 | 1 | 1428 | 18 | 60% | 30 |
| 1 | 1 | Test A<br>Test B | $\text{Roundup}\left\{\left(\frac{1}{360}\right)\cdot\left(\frac{19\cdot 10^6}{\text{PRI}_{\mu\text{sec}}}\right)\right\}$ | 60% | 30 |
| 2 | 1-5 | 150-230 | 23-29 | 60% | 30 |
| 3 | 6-10 | 200-500 | 16-18 | 60% | 30 |
| 4 | 11-20 | 200-500 | 12-16 | 60% | 30 |
| Aggregate (Radar Types 1-4) | | | | 80% | 120 |

Test A: 15 unique PRI values randomly selected from the list of 23 PRI values in Table 5a
Test B: 15 unique PRI values randomly selected within the range of 518-3066 μsec, with a minimum increment of 1 μsec, excluding PRI values selected in Test A

A minimum of 30 unique waveforms are required for each of the short pulse radar types 2 through 4. For short pulse radar type 1, the same waveform is used a minimum of 30 times. If more than 30 waveforms are used for short pulse radar types 2 through 4, then each additional waveform must also be unique and not repeated from the previous waveforms.

If more than 30 waveforms are used for Short Pulse Radar Type 1, then each additional waveform is generated with Test B and must also be unique and not repeated from the previous waveforms in Tests A or B.

The aggregate is the average of the percentage of successful detections of short pulse radar types 1-4.

# 3 Calibration Setup and DFS Test Results

## 3.1 Calibration of Radar Waveform

### 3.1.1 Radar Waveform Calibration Procedure

The Interference **Radar Detection Threshold Level** is *(-62dBm) + (0)* [dBi]+ 1 dB= -61dBm that had been taken into account the output power range and antenna gain. The following equipment setup was used to calibrate the radiated Radar Waveform. A vector signal generator was utilized to establish the test signal level for radar type 0. During this process there were no transmissions by either the Master or Client Device. The spectrum analyzer was switched to the zero span (Time Domain) at the frequency of the Radar Waveform generator. Peak detection was used. The spectrum analyzer resolution bandwidth (RBW) and video bandwidth (VBW) were set to 3 MHz to measure the type 0 radar waveform. The vector signal generator amplitude was set so that the power level measured at the spectrum analyzer was *(-62dBm) + (0)* [dBi]+ 1 dB= -61 dBm. Capture the spectrum analyzer plots on short pulse radar waveform.

### 3.1.2 Radiated Calibration Setup

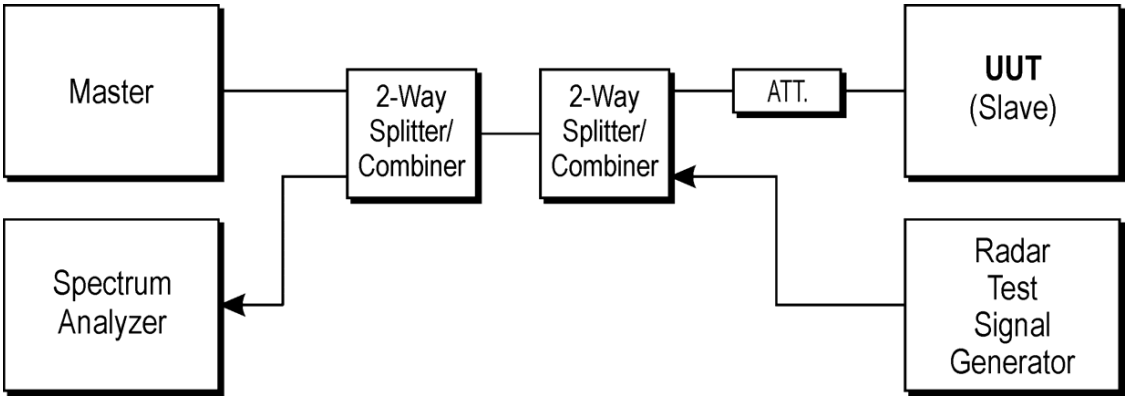


### 3.1.3 Calibration Deviation

There is no deviation with the original standard.

### 3.1.4 Radar Waveform Calibration Result

| <80MHz / 5530MHz> Radar Type 0 |
|---|
| Radar / DFS detection threshold level and the burst of pulses on the Channel frequency |

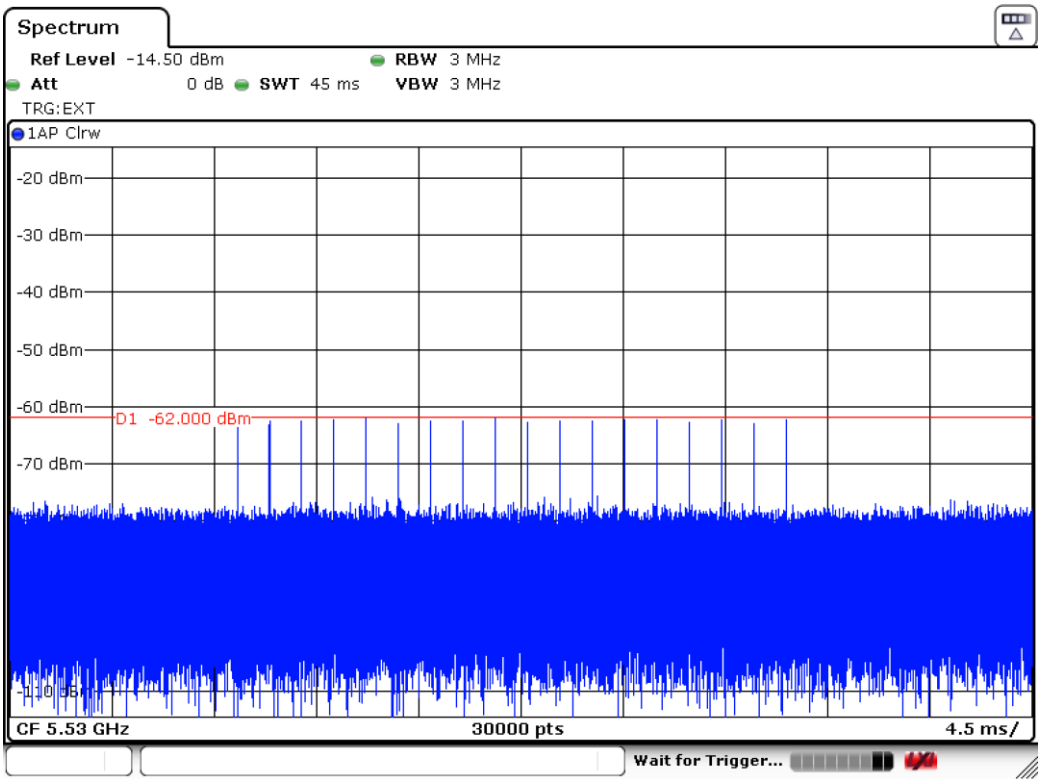

## 3.2 In-Service Monitoring: Channel Move Time, Channel Closing Transmission Time and Non-Occupancy Period

### 3.2.1 Limit of In-Service Monitoring

The EUT has In-Service Monitoring function to continuously monitor the radar signals, If radar is detected, it must leave the channel (Shutdown). The Channel Move Time to cease all transmissions on the current Channel upon detection of a Radar Waveform above the DFS Detection Threshold within 10 sec. The total duration of *Channel Closing Transmission Time* is comprised of 200 milliseconds starting at the beginning of the *Channel Move Time* plus any additional intermittent control signals required to facilitate *Channel* changes (an aggregate of 60 milliseconds) during the remainder of the 10 second period. The aggregate duration of control signals will not count quiet periods in between transmissions.

Non-Occupancy Period time is 30 minute during which a Channel will not be utilized after a Radar Waveform is detected on that Channel. The non-associated Client Beacon Test is during the 30 minutes observation time. The EUT should not make any transmissions in the DFS band after EUT power up.

### 3.2.2 Test Procedures

1. The radar pulse generator is setup to provide a pulse at frequency that the Master and Client are operating. A type 0 radar pulse with a 1us pulse width and a 1428 us PRI is used for the testing.
2. The vector signal generator is adjusted to provide the radar burst (18 pulses) at a level of approximately -62dBm at the antenna of the Master device.
3. A trigger is provided from the pulse generator to the DFS monitoring system in order to capture the traffic and the occurrence of the radar pulse.
4. A U-NII device operating as a Client Device will associate with the Master at Channel. The MPEG file “TestFile.mpg” specified by the FCC is streamed from the “file computer” through the Master to the Client Device and played in full motion video using Media Player Classic Ver. 6.4.8.6 in order to properly load the network for the entire period of the test.
5. When a radar Burst with a level equal to the DFS Detection Threshold + 1dB is generated on the Operating Channel of the U-NII device. At time T0 the Radar Waveform generator sends a Burst of pulse of the radar waveform at Detection Threshold + 1dB.
6. Observe the transmissions of the EUT at the end of the radar Burst on the Operating Channel. Measure and record the transmissions from the EUT during the observation time (Channel Move Time). One 12 seconds plot is reported for the Short Pulse Radar Types 1. The plot for the Short Pulse Radar Types start at the end of the radar burst. The Channel Move Time will be calculated based on the zoom in 600ms plot of the Short Pulse Radar Type.
7. Measurement of the aggregate duration of the Channel Closing Transmission Time method. With the spectrum analyzer set to zero span tuned to the center frequency of the EUT operating channel at the radar simulated frequency, peak detection, and max hold, the dwell time per bin is given by: **Dwell (0.4ms)= S (12000ms) / B (30000)**; where Dwell is the dwell time per spectrum analyzer sampling bin, S is the sweep time and B is the number of spectrum analyzer sampling bins. An upper bound of the aggregate duration of the intermittent control signals of Channel Closing Transmission Time is calculated by: **C (ms)= N X Dwell (0.4 ms)**; where C is the Closing Time, N is the number of spectrum analyzer sampling bins (intermittent control signals) showing a U-NII transmission and Dwell is the dwell time per bin.
8. Measure the EUT for more than 30 minutes following the channel move time to verify that no transmissions or beacons occur on this Channel.

### 3.2.3 Test Setup

Radiated Test Setup Photo

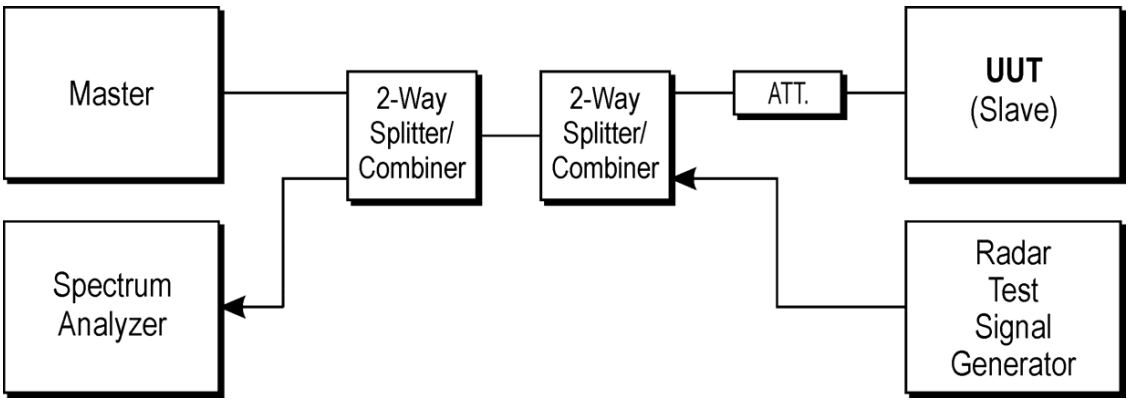


### 3.2.4 Test Deviation

There is no deviation with the original standard.

### 3.2.5 Result of Channel Move Time, Channel Closing Transmission Time and Non-Occupancy Period for Client Beacon Test

| | | | |
|---|---|---|---|
| **Test Mode :** | Client without radar detection | **Temperature :** | 20.7℃ |
| **Test Engineer :** | Eloise | **Relative Humidity :** | 46% |

| BW / Channel | Test Item | Test Result | Limit | Pass/Fail |
|---|---|---|---|---|
| 80MHz / 5530MHz | Channel Move Time | 572.419ms | < 10s | Pass |
| | Channel Closing Transmission Time | 200ms + 6.8ms | < 260ms | Pass |
| | Non-Occupancy Period | ≥ 30 | ≥ 30 min | Pass |

**Note:** The Channel Closing Transmission Time is comprised of 200 milliseconds starting at the beginning of the Channel Move Time plus any additional intermittent control signals required to facilitate a Channel move (an aggregate of 60 milliseconds) during the remainder of the 10 seconds period. The aggregate duration of control signals will not count quiet periods in between transmissions.

### 3.2.6 Channel Move Time, Channel Closing Transmission Time and Non-Occupancy Period for Client Beacon Test Plots

**<80MHz / 5530> In-Service Monitoring**

**Channel Move Time &**

**Channel Closing Transmission Time**

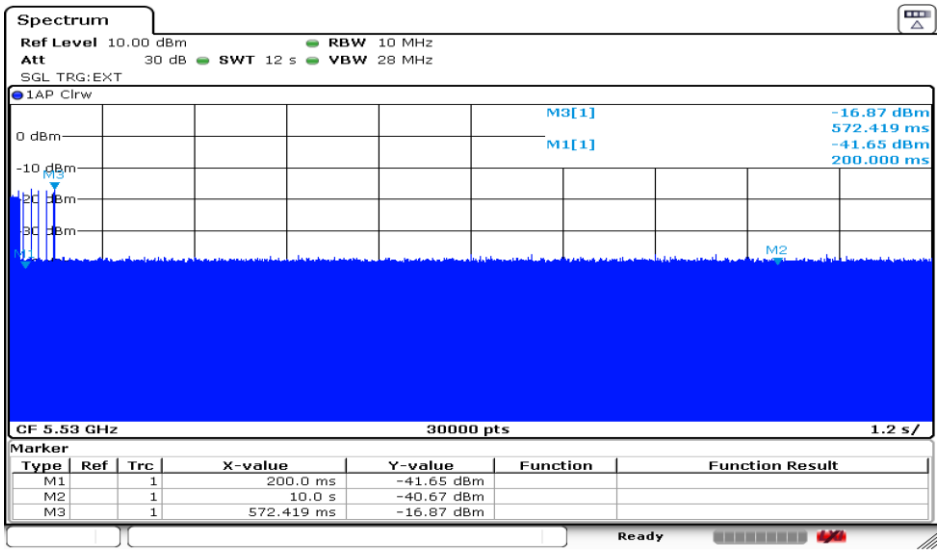


**Non-Occupancy Period**

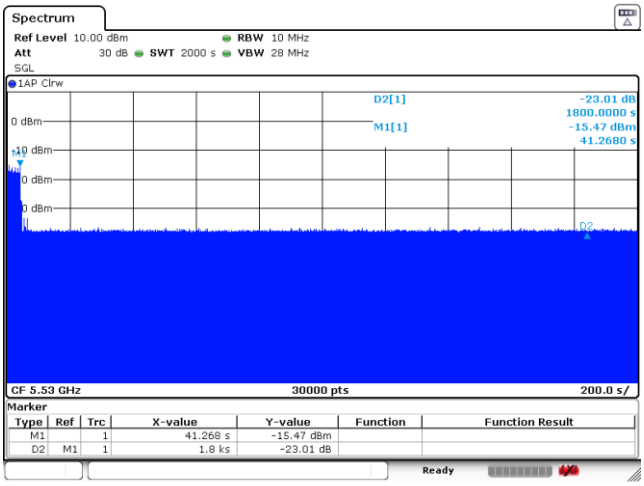


**Non-associated test**

**Master was off. (beacon test)**

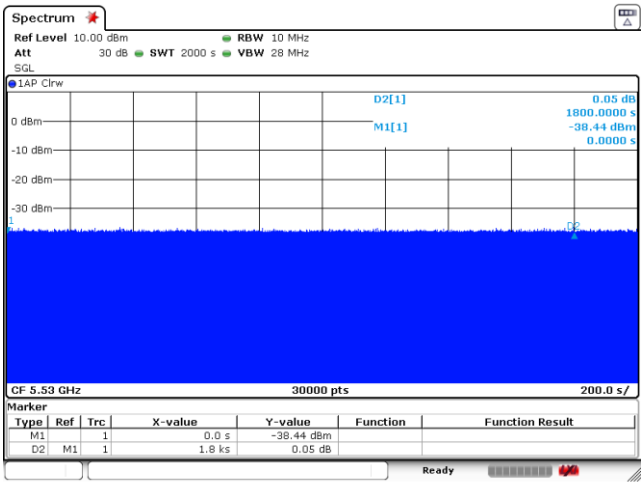


**Note:**

Dwell (0.4 ms)= Sweep Time (12000 ms) / Sweep Point Bins (30000)

Channel Closing Transmission Time (200 +6.8ms) = 200 + Number (17X Dwell (0.4 ms) < 260ms

### 3.2.7 Data Traffic and Noise Floor Plots

| EUT data traffic (Client) | Access Point data traffic (Master) |
|---|---|
| 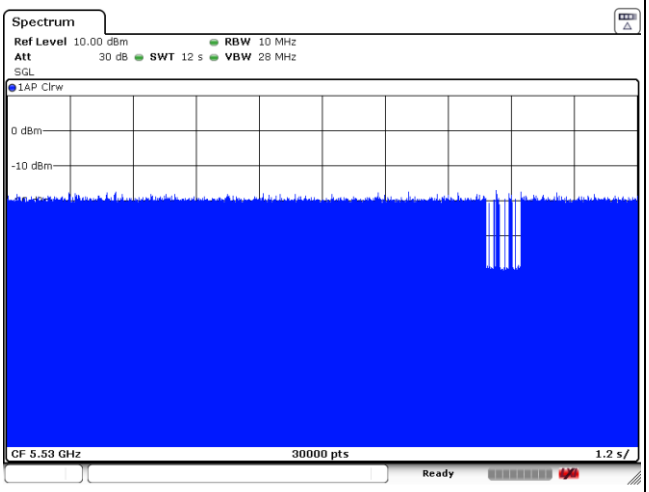 | 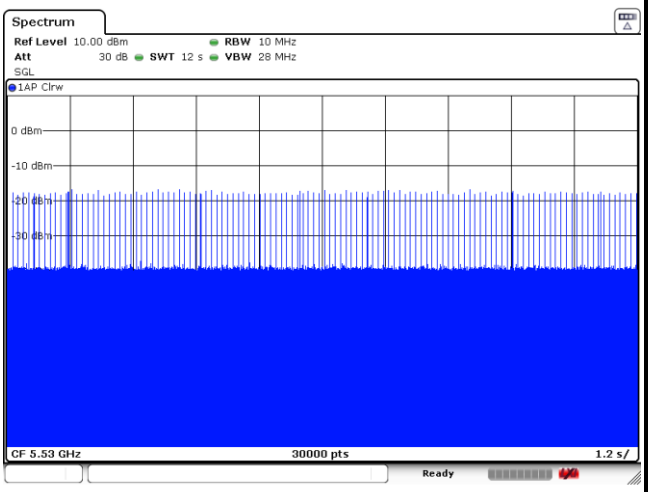 |



| Noise Floor (No transmission) |
|---|
| 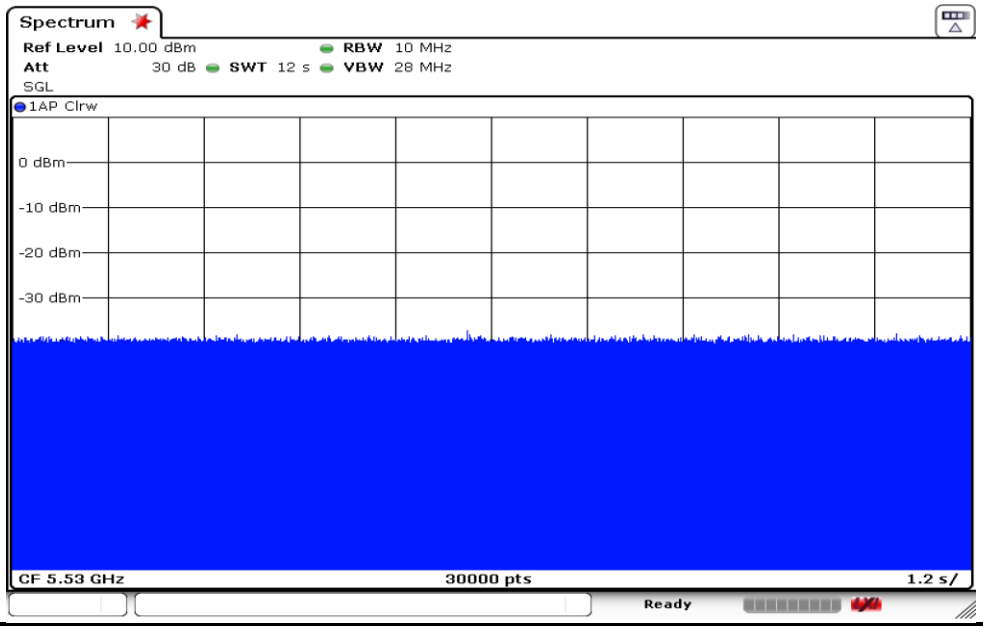 |

# 4 List of Measuring Equipment

| Instrument | Manufacturer | Model No. | Serial No. | Characteristics | Calibration Date | Test Date | Due Date | Remark |
|---|---|---|---|---|---|---|---|---|
| Spectrum Analyzer | R&S | FSV7 | 101632 | 10Hz~7GHz | Jan. 07, 2021 | Oct. 24,2021 | Jan. 06, 2022 | DFS (DFS01-KS) |
| Signal Generator | KEYSIGHT | N5172B | MY53050604 | 9KHz~6GHz | Oct. 27, 2020 | Oct. 24,2021 | Oct. 26, 2021 | DFS (DFS01-KS) |
| Horn Antenna | BEIJING XIBAO | XB-WDB-A-18 | 040505 | 1GHz ~ 18GHz | Jan. 06, 2021 | Oct. 24,2021 | Jan. 05, 2022 | DFS (DFS01-KS) |
| Horn Antenna | Com-Power | AHA-118 | 701030 | 1GHz ~ 18GHz | Nov. 09, 2020 | Oct. 24,2021 | Nov. 08, 2021 | DFS (DFS01-KS) |

NCR: No Calibration Required

**---------- THE END ----------**