FCC Radio Test Report

FCC ID	:	**2AZT5-491192002**
Equipment	:	**HF Reader Module**
Brand Name	:	**SAG**
Model Name	:	**491192002**
Applicant	:	**Securitag Assembly Group Co., Ltd. No. 99, Renhuagong 2nd Rd., Dali Dist., Taichung City 412039, Taiwan**
Manufacturer	:	**Securitag Assembly Group Co., Ltd. No. 99, Renhuagong 2nd Rd., Dali Dist., Taichung City 412039, Taiwan**
Standard	:	**47 CFR FCC Part 15.225**

The product was received on May 07, 2024, and testing was started from May 21, 2024 and completed on Jul. 29, 2024. We, SPORTON INTERNATIONAL INC. Hsinhua Laboratory, would like to declare that the tested sample has been evaluated in accordance with the procedures given in ANSI C63.10-2013 and shown compliance with the applicable technical standards.

The test results in this report apply exclusively to the tested model / sample. Without written approval of SPORTON INTERNATIONAL INC. Hsinhua Laboratory, the test report shall not be reproduced except in full.

Jackson Tsai

Approved by: Jackson Tsai

SPORTON INTERNATIONAL INC. Hsinhua Laboratory

No.52, Huaya 1st Rd., Guishan Dist., Taoyuan City 333411, Taiwan (R.O.C.)

Table of Contents

HISTORY OF THIS TEST REPORT 3

SUMMARY OF TEST RESULT 4

1 GENERAL DESCRIPTION 5

1.1 Information 5
1.2 Testing Applied Standards 7
1.3 Testing Location Information 7
1.4 Measurement Uncertainty 7

2 TEST CONFIGURATION OF EUT 8

2.1 Test Condition 8
2.2 Test Channel Mode 8
2.3 The Worst Case Measurement Configuration 9
2.4 Support Equipment 10
2.5 Test Setup Diagram 12

3 TRANSMITTER TEST RESULT 14

3.1 AC Power-line Conducted Emissions 14
3.2 Emission Bandwidth 16
3.3 Frequency Stability 17
3.4 Field Strength of Fundamental Emissions and Spectrum Mask 18
3.5 Transmitter Radiated Unwanted Emissions 20

4 TEST EQUIPMENT AND CALIBRATION DATA 23

APPENDIX A. TEST RESULTS OF AC POWER-LINE CONDUCTED EMISSIONS
APPENDIX B. TEST RESULTS OF EMISSION BANDWIDTH
APPENDIX C. TEST RESULTS OF TRANSMITTER RADIATED EMISSIONS
APPENDIX D. TEST RESULTS OF FREQUENCY STABILITY
APPENDIX E. TEST PHOTOS
PHOTOGRAPHS OF EUT v02

History of this test report

Report No.	Version	Description	Issued Date
FR450704AR	01	Initial issue of report	Jul. 19, 2024
FR450704AR	02	Revised typo and updated photographs of EUT. (This report is the latest version replacing for the report issued on Jul. 19, 2024.)	Aug. 05, 2024
FR450704AR	03	Revised typo. (This report is the latest version replacing for the report issued on Aug. 05, 2024.)	Aug. 07, 2024

Summary of Test Result

Report Clause	Ref. Std. Clause	Test Items	Result (PASS/FAIL)	Remark
1.1.2	15.203	Antenna Requirement	PASS	-
3.1	15.207	AC Power-line Conducted Emissions	PASS	-
3.2	15.215(c)	Emission Bandwidth	PASS	-
3.3	15.225(e)	Frequency Stability	PASS	-
3.4	15.225(a)~(d)	Field Strength of Fundamental Emissions and Spectrum Mask	PASS	-
3.5	15.225(d)	Transmitter Radiated Unwanted Emissions	PASS	-

Declaration of Conformity:
The test results with all measurement uncertainty excluded are presented in accordance with the regulation limits or requirements declared by manufacturers.
Comments and explanations:
None

Reviewed by: Ryan Hsiao

Report Producer: Michelle Tsai

1 General Description

1.1 Information

1.1.1 RF General Information

RF General Information						
Frequency Range(MHz)	Type	Mode	Ch. Frequency (MHz)	Channel Number	Field Strength (dBuV/m at 3m)	Field Strength (dBuV/m at 30m)
13.553 – 13.567	NFC-V (ISO 15693)	NFC	13.56	1	80.65	40.65

Note :
- Field strength performed peak level at 3m.
- Uses a ASK modulation.

1.1.2 Antenna Information

Ant.	Brand	Model Name	Antenna Type	Connector
1	SAG	39x55 Ant V9	Loop Antenna	Reverse - SMA

Note 1: The antenna mentioned above will not be sold with the EUT in the market.

1.1.3 EUT Information

Operational Condition	
EUT Power Type	From AC Adapter
Type of EUT	
☒	Stand-alone
☐	Combined (EUT where the radio part is fully integrated within another device) Combined Equipment - Brand Name / Model No.:
☐	Plug-in radio (EUT intended for a variety of host systems) Host System - Brand Name / Model No.:
☐	Other:

1.1.4 Test Signal Duty Cycle

Duty Cycle Operation Restriction			
The transmitter is used for		The transmitter is operated	
☒	Inductive applications	☒	Automatically triggered
☐	Duty cycle fixed mode	☒	Duty cycle random mode
☐	**Duty cycle mode - NFC-A (ISO 14443-3A)**		
Declare transmitter duty cycle / 1 hour =		100%	
☐	**Duty cycle mode - NFC-B (ISO 14443-3B)**		
Declare transmitter duty cycle / 1 hour =		100%	
☐	**Duty cycle mode - NFC-F (ISO 18092)**		
Declare transmitter duty cycle / 1 hour =		100%	
☒	**Duty cycle mode - NFC-V (ISO 15693)**		
Declare transmitter duty cycle / 1 hour =		100%	

1.2 Testing Applied Standards

According to the specifications of the manufacturer, the EUT must comply with the requirements of the following standards:

- 47 CFR FCC Part 15
- ANSI C63.10-2013

The following reference test guidance is not within the scope of accreditation of TAF:

- KDB 414788 D01 v01r01

1.3 Testing Location Information

Test Lab. : Sporton International Inc. Hsinhua Laboratory				
☒ Hsinhua (**TAF:** 3785)	**ADD:** No.52, Huaya 1st Rd., Guishan Dist., Taoyuan City 333411, Taiwan (R.O.C.)			
	TEL: 886-3-327-3456		**FAX:** 886-3-327-0973	
Test site Designation No. TW3785 with FCC.				
Test Condition	**Test Site No.**	**Test Engineer**	**Test Environment**	**Test Date**
AC Conduction	CO04-HY	Wayne Chiu	23.1~24.5°C / 52~56%	31/May/2024
RF Conducted	TH01-HY	Sonic Li	22.3~23.4°C / 55~57%	21/May/2024
Radiated	03CH03-HY	Ivan Chung	22.3~23.1°C / 49~53%	28/May/2024
Radiated	03CH03-HY	Henry Ho	23.12~23.80°C / 49~51%	29/Jul/2024
☐ Wen 33rd.St. (**TAF:** 3785)	**ADD:** No.14-1, Ln. 19, Wen 33rd St., Guishan Dist., Taoyuan City 333010, Taiwan (R.O.C.)			
	TEL: 886-3-318-0787		**FAX:** 886-3-318-0287	
Test site Designation No. TW0008 with FCC.				

1.4 Measurement Uncertainty

ISO/IEC 17025 requires that an estimate of the measurement uncertainties associated with the emissions test results be included in the report. The measurement uncertainties given below are based on a 95% confidence level (based on a coverage factor (k=2)

Test Items	Uncertainty	Remark
AC Power-line Conducted Emissions	4.53 dB	Confidence levels of 95%
Emission Bandwidth	0.005 MHz	Confidence levels of 95%
Frequency Stability	5 ppm	Confidence levels of 95%
Field Strength of Fundamental Emissions and Spectrum Mask	2.5 dB	Confidence levels of 95%
Transmitter Radiated Unwanted Emissions	4.8 dB	Confidence levels of 95%
Receiver Radiated Unwanted Emissions	4.8 dB	Confidence levels of 95%
Temperature	0.41 °C	Confidence levels of 95%
Humidity	3.4 %	Confidence levels of 95%

2 Test Configuration of EUT

2.1 Test Condition

Condition Item	Abbreviation/Remark	Remark
TnomVnom	Tnom	20°C
-	Vnom	5V
Freq. Stability	Abbreviation	Remark
-20°C	-	-
-10°C	-	-
0°C	-	-
10°C	-	-
20°C	-	-
30°C	-	-
40°C	-	-
50°C	-	-
20°C-5.75V	-	-
20°C-5V	-	-
20°C-4.25V	-	-

2.2 Test Channel Mode

Test Software Version	MAX66300USBDemo Ver 1.5

Mode	Power Setting
NFC	-
13.56MHz	default

2.3 The Worst Case Measurement Configuration

The Worst Case Mode for Following Conformance Tests	
Tests Item	AC power-line conducted emissions
Condition	AC power-line conducted measurement for line and neutral Test Voltage: 120Vac / 60Hz
Operating Mode	CTX
	Adapter Mode

The Worst Case Mode for Following Conformance Tests	
Tests Item	Emission Bandwidth, Frequency Stability
Test Condition	Conducted measurement

The Worst Case Mode for Following Conformance Tests	
Tests Item	Field Strength of Fundamental Emissions and Spectrum Mask Transmitter Radiated Unwanted Emissions
Test Condition	Radiated measurement
Pretest Mode	NFC-V (ISO 15693)
Operating Mode	CTX
	1. Adapter Mode (port 1)
	2. Adapter Mode (port 2)
	3. Adapter Mode (port 3)
	4. Adapter Mode (port 4)
Mode 1 configuration was pretested and found to be the worst case and measured during the test.	
Orthogonal Planes of EUT	**Z Plane**

2.4 Support Equipment

Support Equipment – AC Conduction					
No.	**Equipment**	**Brand Name**	**Model Name**	**FCC ID**	**Remark**
1	AC Power Cable	Power sync	TPCMRN0018	-	-
2	NB	DELL	Latitude 7290	-	-
3	Adapter for NB	DELL	HA65NM130	-	-
4	Adapter	ASUS	AD83521	-	-
5	Console Board	Prolific	PL2303 USB-TTL	-	Provided by Customer
6	USB to UART cable*2	DuPont	DB25030D-40C	-	Provided by Customer
7	Switch	SAG	SS-SK-02P	-	Provided by Customer
8	Ipex cable	JYEBAO	A30UFL-0178-50	-	Provided by Customer
9	Antenna	SAG	39x55 Ant V9	-	Provided by Customer
10	USB Cable	SAG	USB-AMC30	-	Provided by Customer
11	Power supply	SAG	LM1117IMP-3.3/NOPB	-	Provided by Customer
12	DuPont cable*2	DuPont	DB25030D-40C	-	Provided by Customer

Support Equipment – Conducted					
No.	**Equipment**	**Brand Name**	**Model Name**	**FCC ID**	**Remark**
1	Notebook	DELL	E5410	-	-
2	Adapter for NB	DELL	HA65NM130	-	-
3	Console Board	Prolific	PL2303 USB-TTL	-	Provided by Customer
4	USB to UART cable	DuPont	DB25030D-40C	-	Provided by Customer
5	Switch	SAG	SS-SK-02P	-	Provided by Customer
6	Ipex cable	JYEBAO	A30UFL-0178-50	-	Provided by Customer
7	USB Cable	SAG	USB-AMC30	-	Provided by Customer
8	Power supply	SAG	LM1117IMP-3.3/NOPB	-	Provided by Customer
9	DuPont cable*2	DuPont	DB25030D-40C	-	Provided by Customer
10	Antenna	SAG	39x55 Ant V9	-	Provided by Customer

Support Equipment – Radiated					
No.	**Equipment**	**Brand Name**	**Model Name**	**FCC ID**	**Remark**
1	iPod	Apple	A1199	-	-
2	Apple 30-pin to USB Original cable	Apple	MA591G/C	-	-
3	Earphone	Apple	MD827FE/A	-	-
4	AC Power Cable	Power sync	TPCMRN0018	-	-
5	NB	DELL	Latitude 7290	-	-
6	Adapter for NB	DELL	HA65NM130	-	-
7	Adapter	ASUS	AD83521	-	-
8	Console Board	Prolific	PL2303 USB-TTL	-	Provided by Customer
9	USB to UART cable*2	DuPont	DB25030D-40C	-	Provided by Customer
10	Switch	SAG	SS-SK-02P	-	Provided by Customer
11	Ipex cable	JYEBAO	A30UFL-0178-50	-	Provided by Customer
12	Antenna	SAG	39x55 Ant V9	-	Provided by Customer
13	USB Cable	SAG	USB-AMC30	-	Provided by Customer
14	Power supply	SAG	LM1117IMP-3.3/NOPB	-	Provided by Customer
15	DuPont cable*2	DuPont	DB25030D-40C	-	Provided by Customer

2.5 Test Setup Diagram

Test Setup Diagram – AC Line Conducted Emission Test

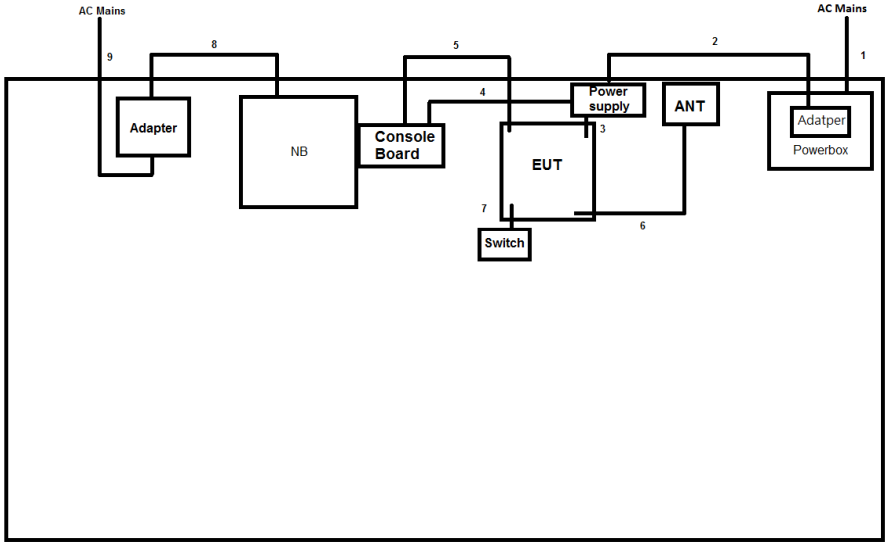

Item	Connection	Shielded	Length(m)	Remark
1	AC Power cable	No	1.0	-
2	USB cable	No	0.4	-
3	DuPont cable	No	0.1	-
4	USB to UART cable	No	0.1	-
5	USB to UART cable	No	0.1	-
6	Ipex cable	No	0.5	-
7	DuPont cable	No	0.1	-
8	DC Power cable	No	1.5	-
9	AC Power cable	No	1.8	-

Test Setup Diagram - Radiated Test

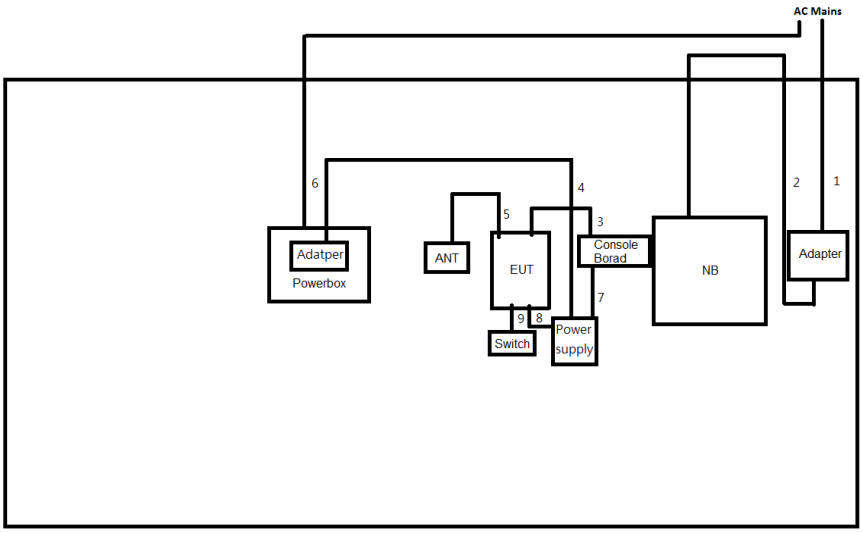

Item	Connection	Shielded	Length(m)	Remark
1	AC Power cable	No	1.8	-
2	DC Power cable	No	1.5	-
3	USB to UART cable	No	0.1	-
4	USB cable	No	0.4	-
5	Ipex cable	No	0.5	-
6	AC Power cable	No	1.8	-
7	USB to UART cable	No	0.1	-
8	DuPont cable	No	0.1	-
9	DuPont cable	No	0.1	-

3 Transmitter Test Result

3.1 AC Power-line Conducted Emissions

3.1.1 AC Power-line Conducted Emissions Limit

AC Power-line Conducted Emissions Limit		
Frequency Emission (MHz)	**Quasi-Peak**	**Average**
0.15-0.5	66 - 56 *	56 - 46 *
0.5-5	56	46
5-30	60	50
Note 1: * Decreases with the logarithm of the frequency.		

3.1.2 Measuring Instruments

Refer a test equipment and calibration data table in this test report.

3.1.3 Test Procedures

Test Method		
☒	Refer as ANSI C63.10-2013, clause 6.2 for AC power-line conducted emissions.	
☒	If AC conducted emissions fall in operating band, then following below test method confirm final result.	
	☐	Accept measurements done with a suitable dummy load replacing the antenna under the following conditions: (1) Perform the AC line conducted tests with the antenna connected to determine compliance with FCC 15.207 limits outside the transmitter's fundamental emission band; (2) Retest with a dummy load to determine compliance with FCC 15.207 limits within the transmitter's fundamental emission band.
	☒	For a device with a permanent antenna operating at or below 30 MHz, accept measurements done with a suitable dummy load, in lieu of the permanent antenna under the following conditions: (1) Perform the AC line conducted tests with the permanent antenna to determine compliance with the FCC 15.207 limits outside the transmitter's fundamental emission band; (2) Retest with a dummy load in lieu of the permanent antenna to determine compliance with the FCC 15.207 limits within the transmitter's fundamental emission band.

3.1.4 Measurement Results Calculation

The measured Level is calculated using:
Corrected Reading: Raw(Read Level) +LISN(LISN Factor) + CL(Cable Loss) + AT(Attenuator).

3.1.5 Test Setup

AC Power-line Conducted Emissions

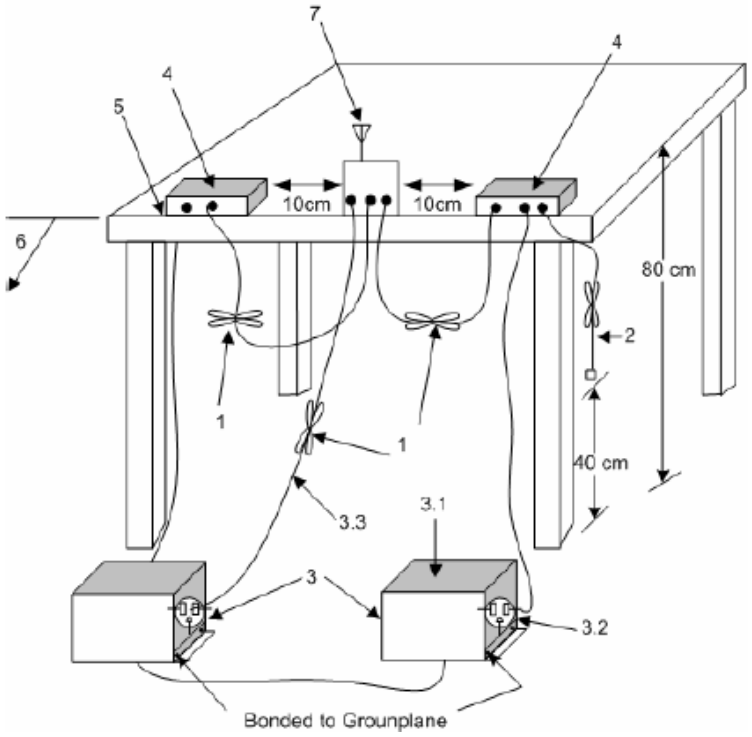

1—Interconnecting cables that hang closer than 40 cm to the ground plane shall be folded back and forth in the center forming a bundle 30 cm to 40 cm long.
2—The I/O cables that are not connected to an accessory shall be bundled in the center. The end of the cable may be terminated, if required, using the correct terminating impedance. The overall length shall not exceed 1 m.
3—EUT connected to one LISN. Unused LISN measuring port connectors shall be terminated in 50Ωloads. LISN may be placed on top of, or immediately beneath, reference ground plane.
3.1—All other equipment powered from additional LISN(s).
3.2—A multiple-outlet strip may be used for multiple power cords of non-EUT equipment.
3.3—LISN at least 80 cm from nearest part of EUT chassis.
4—Non-EUT components of EUT system being tested.
5—Rear of EUT, including peripherals, shall all be aligned and flush with edge of tabletop.
6—Edge of tabletop shall be 40 cm removed from a vertical conducting plane that is bonded to the ground plane.
7—Antenna can be integral or detachable. If detachable, then the antenna shall be attached for this test.

3.1.6 Test Result of AC Power-line Conducted Emissions

Refer as Appendix A

3.2 Emission Bandwidth

3.2.1 Emission Bandwidth Limit

20dB Bandwidth Limit	
☒	Intentional radiators must be designed to ensure that the 20 dB bandwidth of the emissions in the specific band (13.553 – 13.567).

3.2.2 Measuring Instruments

Refer a test equipment and calibration data table in this test report.

3.2.3 Test Procedures

Test Method	
☒	Because the measured signal is CW or CW-like adjusting the RBW per C63.10 would not be practical since measured bandwidth will always follow the RBW and the result will be approximately twice the RBW.
☒	For radiated measurement. Loop antenna was rotated about the horizontal and vertical axis and the equipment to be measured and the test antenna shall be oriented to obtain the maximum emitted field strength level.

3.2.4 Test Setup

Emission Bandwidth

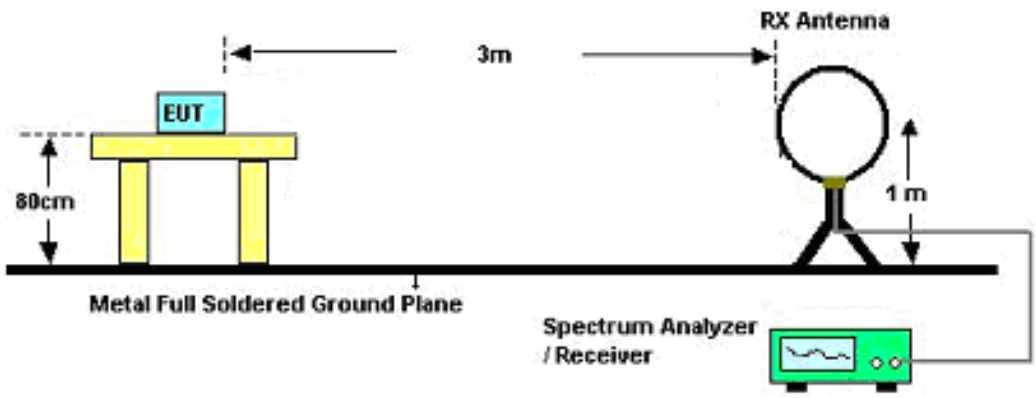

3.2.5 Test Result of Emission Bandwidth

Refer as Appendix B

3.3 Frequency Stability

3.3.1 Frequency Stability Limit

Frequency Stability Limit
☒ Carrier frequency stability shall be maintained to ±0.01% (±100 ppm).

3.3.2 Measuring Instruments

Refer a test equipment and calibration data table in this test report.

3.3.3 Test Procedures

Test Method	
☒	Refer as ANSI C63.10, clause 6.8 for frequency stability tests
	☒ Frequency stability with respect to ambient temperature
	☒ Frequency stability when varying supply voltage
☐	For conducted measurement.
☒	For radiated measurement. The equipment to be measured and the test antenna shall be oriented to obtain the maximum emitted power level.

3.3.4 Test Setup

Frequency Stability

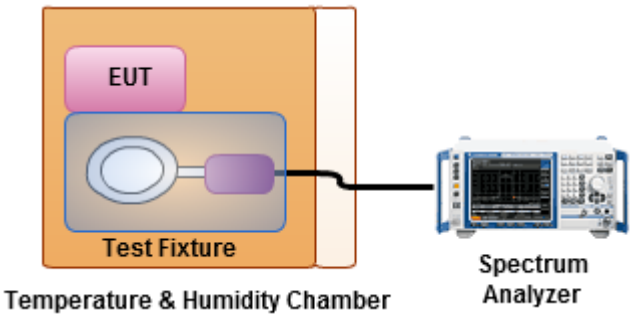

3.3.5 Test Result of Frequency Stability

Refer as Appendix C

3.4 Field Strength of Fundamental Emissions and Spectrum Mask

3.4.1 Field Strength of Fundamental Emissions and Spectrum Mask Limit

Field Strength of Fundamental Emissions and Spectrum Mask					
Emissions	**(uV/m)@30m**	**(dBuV/m)@30m**	**(dBuV/m)@10m**	**(dBuV/m)@3m**	**(dBuV/m)@1m**
fundamental	15848	84.0	103.1	124.0	143.1
Quasi peak measurement of the fundamental.					

Spectrum Mask					
Freq. of Emission (MHz)	**(uV/m)@30m**	**(dBuV/m)@30m**	**(dBuV/m)@10m**	**(dBuV/m)@3m**	**(dBuV/m)@1m**
1.705~13.110	30	29.5	48.6	69.5	88.6
13.110~13.410	106	40.5	59.6	80.5	99.6
13.410~13.553	334	50.5	69.6	90.5	109.6
13.553~13.567	15848	84.0	103.1	124.0	143.1
13.567~13.710	334	50.5	69.6	90.5	109.6
13.710~14.010	106	40.5	59.6	80.5	99.6
14.010~30.000	30	29.5	48.6	69.5	88.6

3.4.2 Measuring Instruments

Refer a test equipment and calibration data table in this test report.

3.4.3 Test Procedures

Test Method		
☒	Refer as ANSI C63.10, clause 6.4 for radiated emissions from below 30 MHz and test distance is 3m.	
☒	At frequencies below 30 MHz, measurements may be performed at a distance closer than that specified in the requirements; however, an attempt should be made to avoid making measurements in the near field. Pending the development of an appropriate measurement procedure for measurements performed below 30 MHz, when performing measurements at a closer distance than specified, the results shall be following below methods.	
	☐	The results shall be extrapolated to the specified distance by making measurements at a minimum of two distances on at least one radial to determine the proper extrapolation factor.
	☒	The results shall be by using the square of an inverse linear distance extrapolation factor (40 dB/decade).
☒	For radiated measurement. Loop antenna was rotated about the horizontal and vertical axis and the equipment to be measured and the test antenna shall be oriented to obtain the maximum emitted field strength level.	

3.4.4 Measurement Results Calculation

The measured Level is calculated using:
Corrected Reading: Raw(Read Level) + AF(Antenna Factor) + CL(Cable Loss) - PA(Preamp Factor).

3.4.5 Test Setup

Field Strength of Fundamental Emissions and Spectrum Mask

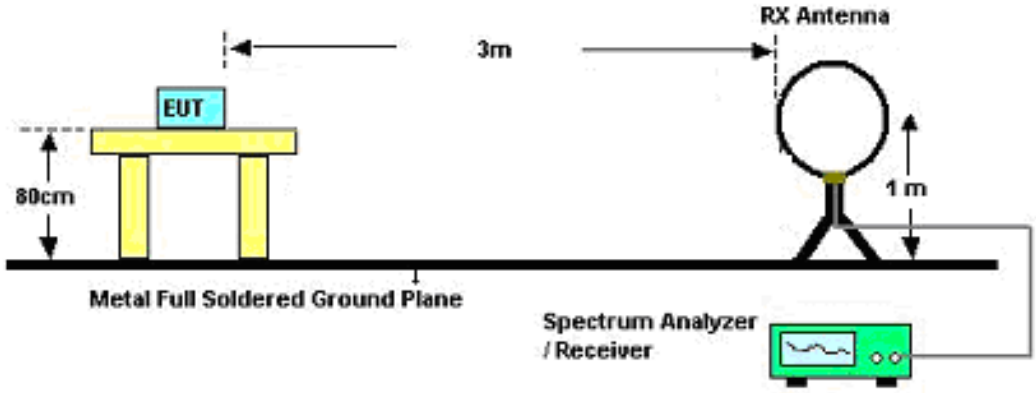

3.4.6 Test Result of Field Strength of Fundamental Emissions and Spectrum Mask

Refer as Appendix D

3.5 Transmitter Radiated Unwanted Emissions

3.5.1 Transmitter Radiated Unwanted Emissions Limit

Transmitter Radiated Unwanted Emissions Limit			
Frequency Range (MHz)	**Field Strength (uV/m)**	**Field Strength (dBuV/m)**	**Measure Distance (m)**
0.009~0.490	2400/F(kHz)	48.5 - 13.8	300
0.490~1.705	24000/F(kHz)	33.8 - 23	30
1.705~30.0	30	29	30
30~88	100	40	3
88~216	150	43.5	3
216~960	200	46	3
Above 960	500	54	3

Note 1: Test distance for frequencies at or above 30 MHz, measurements may be performed at a distance other than the limit distance provided they are not performed in the near field and the emissions to be measured can be detected by the measurement equipment. When performing measurements at a distance other than that specified, the results shall be extrapolated to the specified distance using an extrapolation factor of 20 dB/decade (inverse of linear distance for field-strength measurements, inverse of linear distance-squared for power-density measurements).

Note 2: Test distance for frequencies at below 30 MHz, measurements may be performed at a distance closer than the EUT limit distance; however, an attempt should be made to avoid making measurements in the near field. When performing measurements below 30 MHz at a closer distance than the limit distance, the results shall be extrapolated to the specified distance by either making measurements at a minimum of two or more distances on at least one radial to determine the proper extrapolation factor or by using the square of an inverse linear distance extrapolation factor (40 dB/decade). The test report shall specify the extrapolation method used to determine compliance of the EUT.

3.5.2 Measuring Instruments

Refer a test equipment and calibration data table in this test report.

3.5.3 Test Procedures

Test Method		
☒	Refer as ANSI C63.10, clause 6.5 for radiated emissions from 30 MHz to 1 GHz and test distance is 3m.	
☒	Refer as ANSI C63.10, clause 6.4 for radiated emissions from below 30 MHz and test distance is 3m.	
☒	At frequencies below 30 MHz, measurements may be performed at a distance closer than that specified in the requirements; however, an attempt should be made to avoid making measurements in the near field. Pending the development of an appropriate measurement procedure for measurements performed below 30 MHz, when performing measurements at a closer distance than specified, the results shall be following below methods.	
	☐	The results shall be extrapolated to the specified distance by making measurements at a minimum of two distances on at least one radial to determine the proper extrapolation factor.
	☒	The results shall be by using the square of an inverse linear distance extrapolation factor (40 dB/decade).
☒	For radiated measurement. Loop antenna was rotated about the horizontal and vertical axis and the equipment to be measured and the test antenna shall be oriented to obtain the maximum emitted field strength level.	
☒	The any unwanted emissions level shall not exceed the fundamental emission level.	
☒	All amplitude of spurious emissions that are attenuated by more than 20 dB below the permissible value has no need to be reported.	
☒	KDB 414788 D01 v01r01 Open-Field Test Sites and Chamber Correlation Justification.	
	▪	Based on FCC 15.31(f)(2): measurements may be performed at a distance closer than that specified in regulations; however, an attempt should be made to avoid making measurements in the near field.
	▪	Open-field site and chamber correlation testing had been performed and chamber measured test result is the worst case test result.

3.5.4 Measurement Results Calculation

The measured Level is calculated using:
Corrected Reading: Raw(Read Level) + AF(Antenna Factor) + CL(Cable Loss) - PA(Preamp Factor)

3.5.5 Test Setup

Transmitter Radiated Unwanted Emissions

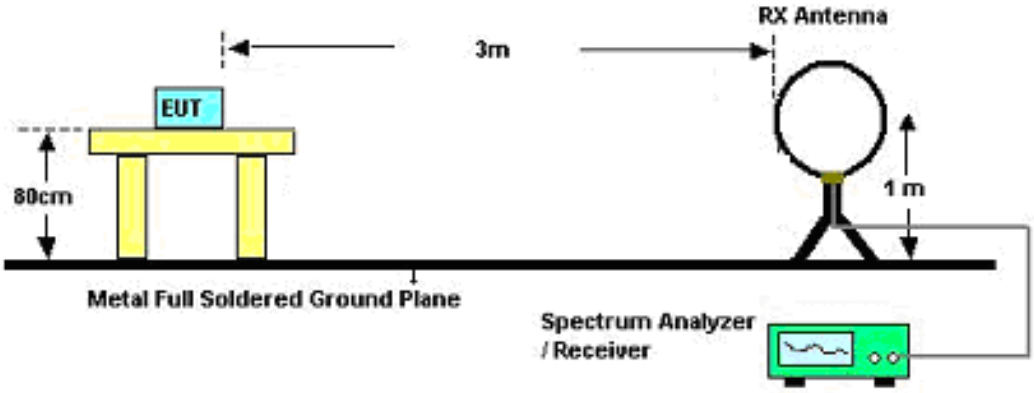

Magnetic field tests shall be performed in the frequency range of 9 kHz to 30 MHz using a calibrated loop antenna. The center of the loop shall be 1 m above the ground.

Transmitter Radiated Bandedge Emissions

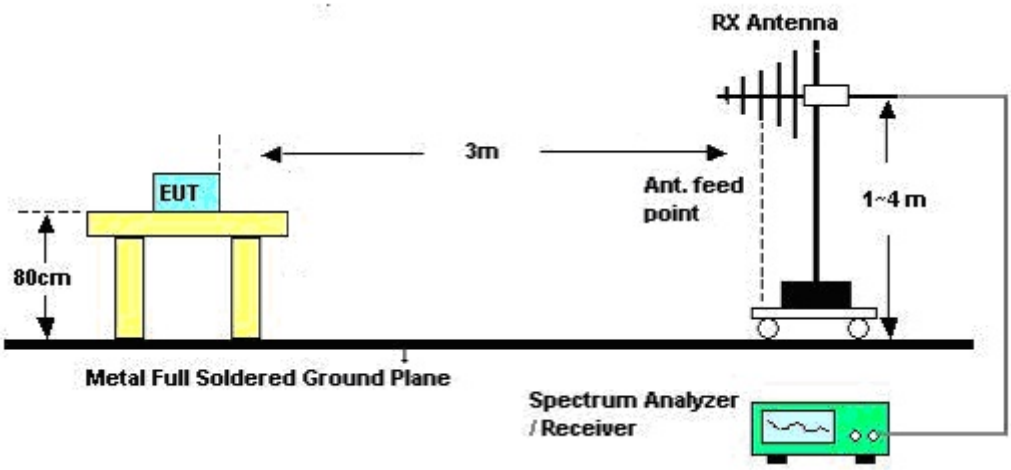

Electric field tests shall be performed in the frequency range of 30 MHz to 1000 MHz using a calibrated bi-log antenna. the antenna height shall be varied from 1 m to 4 m.

3.5.6 Transmitter Radiated Unwanted Emissions

Refer as Appendix D

4 Test Equipment and Calibration Data

Instrument for AC Conduction

Instrument	Manufacturer / Brand	Model No.	Serial No.	Characteristics	Calibration Date	Calibration Due Date
EMI Test Receiver	ROHDE & SCHWARZ	ESR	102318	9kHz ~ 3.6GHz	27/Dec/2023	26/Dec/2024
LISN(Artificial Mains Network)	SCHWARZBECK	NSLK 8127	8127477	9kHz ~ 30MHz	12/Apr/2024	11/Apr/2025
Two-Line V-Network	SCHAFFNER	NNB 41	06/10024	9kHz ~ 30MHz	11/Mar/2024	10/Mar/2025
RF Cable 5m	TITAN	TITAN	CO04-cable-01	9 kHz~200MHz	27/Feb/2024	26/Feb/2025
Impuls Begrenzer Pulse Limiter	SCHWARZBECK	VTSD 9561-F	9561-F041	9kHz ~ 30MHz	18/Oct/2023	17/Oct/2024
Software	Sporton	SENSE-EMI	V5.11.3	-	NCR	NCR

NCR: No Calibration Required

Instrument for Conducted Test

Instrument	Manufacturer / Brand	Model No.	Serial No.	Characteristics	Calibration Date	Calibration Due Date
Signal Analyzer	R&S	FSV 40	101013	10Hz~40GHz	09/Apr/2024	08/Apr/2025
Programmable Temp. & Humi. Chamber	Giant Force	GTH-225-20-SP-SD	MAA1112-007	-20~100℃	14/May/2024	13/May/2025
SENSE-NFC	Sporton	V5.11.00	N/A	N/A	N/A	N/A

Instrument for Radiated Test

Instrument	Manufacturer / Brand	Model No.	Serial No.	Characteristics	Calibration Date	Calibration Due Date
3m Semi Anechoic Chamber	SIDT FRANKONIA	SAC-3M	03CH03-HY	30MHz~1GHz 3m	30/Jul/2023	29/Jul/2024
3m Semi Anechoic Chamber	SIDT FRANKONIA	SAC-3M	03CH03-HY	30MHz~1GHz 3m	14/Jul/2024	13/Jul/2025
EMI Test Receiver	R&S	ESR	102052	9kHz~3.6GHz	03/May/2024	02/May/2025
Signal Analyzer	R&S	FSV40	101500	10Hz~40GHz	26/Oct/2023	25/Oct/2024
Loop Antenna	TESEQ	HLA 6120	31244	9kHz~30MHz	19/Mar/2024	18/Mar/2025
Bilog Antenna & 6dB Attenuator	SCHAFFNER / EMCI	CBL6112B / N-6-05	22237 / AT-N-0603	30MHz~1GHz	15/Oct/2023	14/Oct/2024
RF Cable-R03m	Jye Bao	RG142	CB021	9kHz~30MHz	13/Jun/2023	12/Jun/2024
RF Cable-R03m	Jye Bao	RG142	CB021	9kHz~30MHz	12/Jun/2024	11/Jun/2025
RF Cable-R03m	Jye Bao	RG142	03CH03-cable-02	30MHz~1GHz	13/Jun/2023	12/Jun/2024
Amplifier	Aglient	8447D	2944A08033	100kHz~1.3GHz	14/Sep/2023	13/Sep/2024
SENSE-NFC	Sporton	V5.12.0	N/A	N/A	N/A	N/A

Summary

Mode	Result	Type	Freq (Hz)	Level (dBuV)	Limit (dBuV)	Margin (dB)	Condition
Mode 1	Pass	AV	515.002k	27.06	46.00	-18.94	Line

Result

Mode	Result	Type	Freq (Hz)	Level (dBuV)	Limit (dBuV)	Margin (dB)	Condition	Comments
Mode 1	Pass	QP	281.85k	32.25	60.76	-28.51	Line	-
Mode 1	Pass	AV	281.85k	22.91	50.76	-27.85	Line	-
Mode 1	Pass	QP	515.002k	34.22	56.00	-21.78	Line	-
Mode 1	Pass	AV	515.002k	27.06	46.00	-18.94	Line	-
Mode 1	Pass	QP	1.359M	21.52	56.00	-34.48	Line	-
Mode 1	Pass	AV	1.359M	15.50	46.00	-30.50	Line	-
Mode 1	Pass	QP	3.376M	19.24	56.00	-36.76	Line	-
Mode 1	Pass	AV	3.376M	14.10	46.00	-31.90	Line	-
Mode 1	Pass	QP	7.531M	18.96	60.00	-41.04	Line	-
Mode 1	Pass	AV	7.531M	12.82	50.00	-37.18	Line	-
Mode 1	Pass	QP	21.519M	16.42	60.00	-43.58	Line	-
Mode 1	Pass	AV	21.519M	10.69	50.00	-39.31	Line	-
Mode 1	Pass	QP	255.079k	30.18	61.58	-31.40	Neutral	-
Mode 1	Pass	AV	255.079k	13.80	51.58	-37.78	Neutral	-
Mode 1	Pass	QP	521.206k	31.46	56.00	-24.54	Neutral	-
Mode 1	Pass	AV	521.206k	20.70	46.00	-25.30	Neutral	-
Mode 1	Pass	QP	1.348M	16.24	56.00	-39.76	Neutral	-
Mode 1	Pass	AV	1.348M	10.10	46.00	-35.90	Neutral	-
Mode 1	Pass	QP	2.843M	14.77	56.00	-41.23	Neutral	-
Mode 1	Pass	AV	2.843M	10.19	46.00	-35.81	Neutral	-
Mode 1	Pass	QP	9.013M	14.27	60.00	-45.73	Neutral	-
Mode 1	Pass	AV	9.013M	9.63	50.00	-40.37	Neutral	-
Mode 1	Pass	QP	18.939M	11.73	60.00	-48.27	Neutral	-
Mode 1	Pass	AV	18.939M	7.79	50.00	-42.21	Neutral	-

Conducted Emissions at Powerline_Mode 1

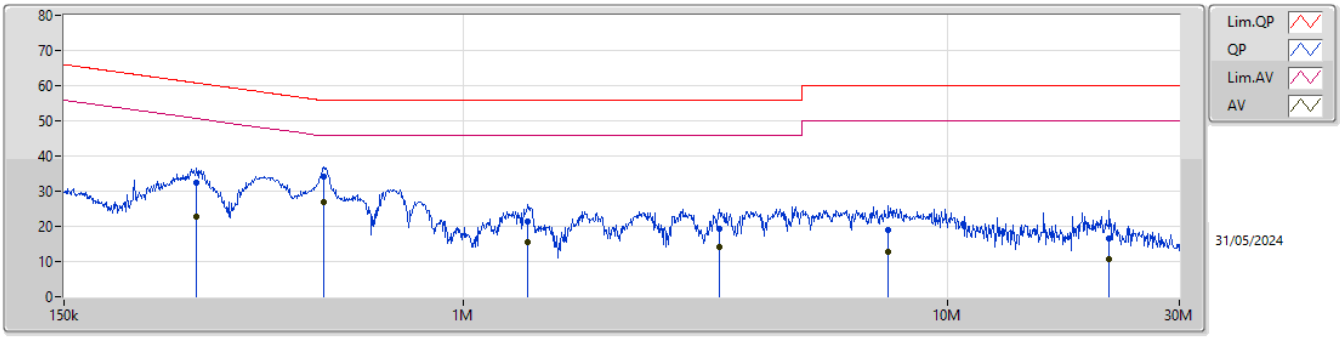

Type	Freq	Level	Limit	Margin	Factor	Condition	Comment	Raw	LISN	CL	AT
	(Hz)	(dBuV)	(dBuV)	(dB)	(dB)			(dBuV)	(dB)	(dB)	(dB)
QP	281.85k	32.25	60.76	-28.51	9.86	Line	-	22.39	0.04	0.10	9.72
AV	281.85k	22.91	50.76	-27.85	9.86	Line	-	13.05	0.04	0.10	9.72
QP	515.002k	34.22	56.00	-21.78	9.93	Line	-	24.29	0.05	0.11	9.77
AV	515.002k	27.06	46.00	-18.94	9.93	Line	-	17.13	0.05	0.11	9.77
QP	1.359M	21.52	56.00	-34.48	9.96	Line	-	11.56	0.06	0.10	9.80
AV	1.359M	15.50	46.00	-30.50	9.96	Line	-	5.54	0.06	0.10	9.80
QP	3.376M	19.24	56.00	-36.76	9.96	Line	-	9.28	0.09	0.08	9.79
AV	3.376M	14.10	46.00	-31.90	9.96	Line	-	4.14	0.09	0.08	9.79
QP	7.531M	18.96	60.00	-41.04	10.03	Line	-	8.93	0.18	0.06	9.79
AV	7.531M	12.82	50.00	-37.18	10.03	Line	-	2.79	0.18	0.06	9.79
QP	21.519M	16.42	60.00	-43.58	10.29	Line	-	6.13	0.33	0.12	9.84
AV	21.519M	10.69	50.00	-39.31	10.29	Line	-	0.40	0.33	0.12	9.84

Conducted Emissions at Powerline_Mode 1

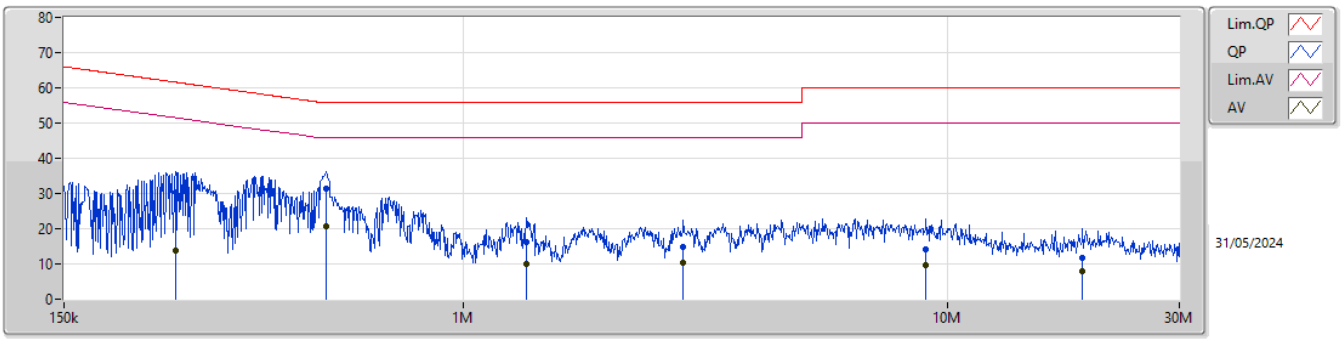

Type	Freq	Level	Limit	Margin	Factor	Condition	Comment	Raw	LISN	CL	AT
	(Hz)	(dBuV)	(dBuV)	(dB)	(dB)			(dBuV)	(dB)	(dB)	(dB)
QP	255.079k	30.18	61.58	-31.40	9.87	Neutral	-	20.31	0.06	0.10	9.71
AV	255.079k	13.80	51.58	-37.78	9.87	Neutral	-	3.93	0.06	0.10	9.71
QP	521.206k	31.46	56.00	-24.54	9.95	Neutral	-	21.51	0.07	0.11	9.77
AV	521.206k	20.70	46.00	-25.30	9.95	Neutral	-	10.75	0.07	0.11	9.77
QP	1.348M	16.24	56.00	-39.76	9.98	Neutral	-	6.26	0.08	0.10	9.80
AV	1.348M	10.10	46.00	-35.90	9.98	Neutral	-	0.12	0.08	0.10	9.80
QP	2.843M	14.77	56.00	-41.23	9.99	Neutral	-	4.78	0.11	0.09	9.79
AV	2.843M	10.19	46.00	-35.81	9.99	Neutral	-	0.20	0.11	0.09	9.79
QP	9.013M	14.27	60.00	-45.73	10.09	Neutral	-	4.18	0.25	0.05	9.79
AV	9.013M	9.63	50.00	-40.37	10.09	Neutral	-	-0.46	0.25	0.05	9.79
QP	18.939M	11.73	60.00	-48.27	10.32	Neutral	-	1.41	0.38	0.11	9.83
AV	18.939M	7.79	50.00	-42.21	10.32	Neutral	-	-2.53	0.38	0.11	9.83

Summary

Mode	Max-OBW (Hz)	ITU-Code	Min-OBW (Hz)	Fl-OBW (Hz)	Fh-OBW (Hz)
13.553-13.567MHz	-	-	-	-	-
NFC_Nss1_1TX(Port1)	2.195k	2K20A1D	2.195k	13.55913M	13.56132M

Max-N dB = Maximum 20dB down bandwidth; Max-OBW = Maximum 99% occupied bandwidth;
Min-N dB = Minimum 20dB down bandwidth; Min-OBW = Minimum 99% occupied bandwidth

Result

Mode	Result	20dB (Hz)	Fl-20dB (Hz)	Fh-20dB (Hz)	OBW (Hz)	Fl-OBW (Hz)	Fh-OBW (Hz)	Limit (Hz)
NFC_Nss1_1TX(Port1)	-	-	-	-	-	-	-	-
13.56MHz_TnomVnom	Pass	2.581k	13.55893M	13.56151M	2.195k	13.55913M	13.56132M	13.553-13.567M

Port X-N dB = Port X 20dB down bandwidth;
Port X-OBW = Port X 99% occupied bandwidth

13.553-13.567MHz_NFC_Nss1_1TX(Port1) EBW

13.56MHz_TnomVnom

21/05/2024

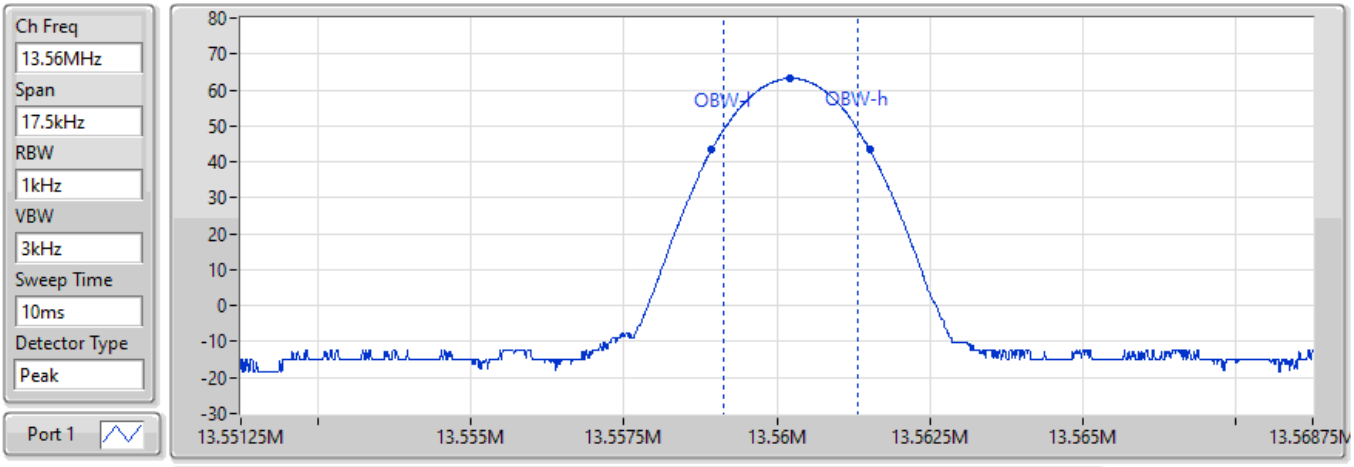

20dB(Hz)	Fl-20dB(Hz)	Fh-20dB(Hz)	OBW(Hz)	Fl-OBW(Hz)	Fh-OBW(Hz)	Limit(Range)
2.581k	13.55893M	13.56151M	2.195k	13.55913M	13.56132M	13.553-13.567M

Summary

Mode	Result	Ch (Hz)	Center (Hz)	ppm	Limit (ppm)	Port	Remark
13.553-13.567MHz	-	-	-	-	-	-	-
NFC_Nss1_1TX(Port1)	Pass	13.56M	13.560306M	22.582	100	1	0 min

Result

Mode	Result	Ch (Hz)	Center (Hz)	ppm	Limit (ppm)	Port	Remark
NFC	-	-	-	-	-	-	-
13.56MHz_-20°C	Pass	13.56M	13.560281M	20.7109	100	1	0 min
13.56MHz_-20°C	Pass	13.56M	13.56028M	20.6464	100	1	2 min
13.56MHz_-20°C	Pass	13.56M	13.56028M	20.6464	100	1	5 min
13.56MHz_-20°C	Pass	13.56M	13.56028M	20.6464	100	1	10 min
13.56MHz_-10°C	Pass	13.56M	13.560306M	22.582	100	1	0 min
13.56MHz_-10°C	Pass	13.56M	13.560306M	22.582	100	1	2 min
13.56MHz_-10°C	Pass	13.56M	13.560305M	22.5175	100	1	5 min
13.56MHz_-10°C	Pass	13.56M	13.560306M	22.582	100	1	10 min
13.56MHz_0°C	Pass	13.56M	13.560295M	21.7432	100	1	0 min
13.56MHz_0°C	Pass	13.56M	13.560295M	21.7432	100	1	2 min
13.56MHz_0°C	Pass	13.56M	13.560295M	21.7432	100	1	5 min
13.56MHz_0°C	Pass	13.56M	13.560296M	21.8077	100	1	10 min
13.56MHz_10°C	Pass	13.56M	13.560265M	19.5495	100	1	0 min
13.56MHz_10°C	Pass	13.56M	13.560265M	19.5495	100	1	2 min
13.56MHz_10°C	Pass	13.56M	13.560265M	19.5495	100	1	5 min
13.56MHz_10°C	Pass	13.56M	13.560265M	19.5495	100	1	10 min
13.56MHz_20°C	Pass	13.56M	13.560255M	18.8398	100	1	0 min
13.56MHz_20°C	Pass	13.56M	13.560255M	18.8398	100	1	2 min
13.56MHz_20°C	Pass	13.56M	13.560255M	18.8398	100	1	5 min
13.56MHz_20°C	Pass	13.56M	13.560255M	18.8398	100	1	10 min
13.56MHz_30°C	Pass	13.56M	13.560222M	16.3881	100	1	0 min
13.56MHz_30°C	Pass	13.56M	13.560222M	16.3881	100	1	2 min
13.56MHz_30°C	Pass	13.56M	13.560222M	16.3881	100	1	5 min
13.56MHz_30°C	Pass	13.56M	13.56022M	16.259	100	1	10 min
13.56MHz_40°C	Pass	13.56M	13.560203M	14.9686	100	1	0 min
13.56MHz_40°C	Pass	13.56M	13.560203M	14.9686	100	1	2 min
13.56MHz_40°C	Pass	13.56M	13.560203M	14.9686	100	1	5 min
13.56MHz_40°C	Pass	13.56M	13.560203M	14.9686	100	1	10 min
13.56MHz_50°C	Pass	13.56M	13.560171M	12.5814	100	1	0 min
13.56MHz_50°C	Pass	13.56M	13.56017M	12.5169	100	1	2 min
13.56MHz_50°C	Pass	13.56M	13.56017M	12.5169	100	1	5 min
13.56MHz_50°C	Pass	13.56M	13.56017M	12.5169	100	1	10 min
13.56MHz_20°C-5.75V	Pass	13.56M	13.560255M	18.8398	100	1	0 min
13.56MHz_20°C-5.75V	Pass	13.56M	13.560256M	18.9043	100	1	2 min
13.56MHz_20°C-5.75V	Pass	13.56M	13.560256M	18.9043	100	1	5 min
13.56MHz_20°C-5.75V	Pass	13.56M	13.560256M	18.9043	100	1	10 min
13.56MHz_20°C-5V	Pass	13.56M	13.560255M	18.8398	100	1	0 min
13.56MHz_20°C-5V	Pass	13.56M	13.560255M	18.8398	100	1	2 min
13.56MHz_20°C-5V	Pass	13.56M	13.560255M	18.8398	100	1	5 min
13.56MHz_20°C-5V	Pass	13.56M	13.560256M	18.9043	100	1	10 min
13.56MHz_20°C-4.25V	Pass	13.56M	13.560255M	18.8398	100	1	0 min
13.56MHz_20°C-4.25V	Pass	13.56M	13.560255M	18.8398	100	1	2 min
13.56MHz_20°C-4.25V	Pass	13.56M	13.560255M	18.8398	100	1	5 min
13.56MHz_20°C-4.25V	Pass	13.56M	13.560255M	18.8398	100	1	10 min

Summary

Mode	Result	Type	Freq (Hz)	Level (dBuV/m)	Limit (dBuV/m)	Margin (dB)	Dist (m)	Azimuth (°)	Height (m)
13.553-13.567MHz	-	-	-	-	-	-	-	-	-
NFC	Pass	PK	1.434M	8.05	24.47	-16.42	30	360	1.00

Result

Mode	Result	Type	Freq (Hz)	Level (dBuV/m)	Limit (dBuV/m)	Margin (dB)	Dist (m)	Azimuth (°)	Height (m)
NFC	-	-	-	-	-	-	-	-	-
13.56MHz_Adapter	Pass	PK	13.56M	40.65	84.00	-43.35	30	360	1.00
13.56MHz_Adapter	Pass	PK	24.228k	-16.34	59.92	-76.26	300	360	1.00
13.56MHz_Adapter	Pass	PK	89.088k	-31.99	48.60	-80.59	300	360	1.00
13.56MHz_Adapter	Pass	PK	118.134k	-31.17	46.16	-77.33	300	360	1.00
13.56MHz_Adapter	Pass	PK	185.36k	-27.47	42.24	-69.71	300	0	1.00
13.56MHz_Adapter	Pass	PK	296.2k	-29.07	38.16	-67.23	300	0	1.00
13.56MHz_Adapter	Pass	PK	445.8k	-32.92	34.62	-67.54	300	0	1.00
13.56MHz_Adapter	Pass	PK	726.08k	8.48	30.38	-21.90	30	360	1.00
13.56MHz_Adapter	Pass	PK	1.434M	8.05	24.47	-16.42	30	360	1.00
13.56MHz_Adapter	Pass	PK	2.91M	-0.93	29.54	-30.47	30	360	1.00

13.56M_NFC_7kHz_Nss1_1TX

13.56MHz_Adapter

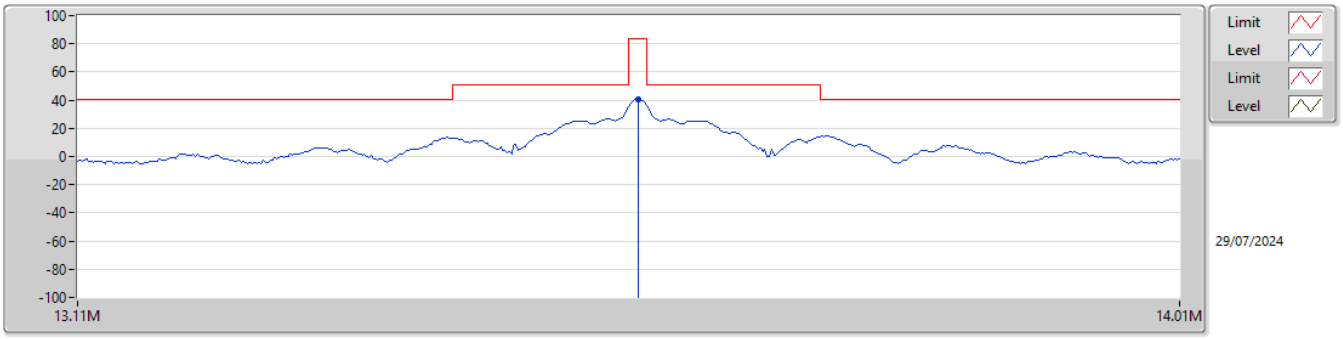

Type	Freq	Level	Limit	Margin	Factor	Dist	Condition	Azimuth	Height	Raw	AF	CL	PA
	(Hz)	(dBuV/m)	(dBuV/m)	(dB)	(dB)	(m)		(°)	(m)	(dBuV)	(dB)	(dB)	(dB)
PK	13.56M	40.65	84.00	-43.35	-17.21	30	Horizontal	360	1.00	57.86	22.30	0.49	-

13.553-13.567MHz_NFC_1TX

13.56MHz_Adapter

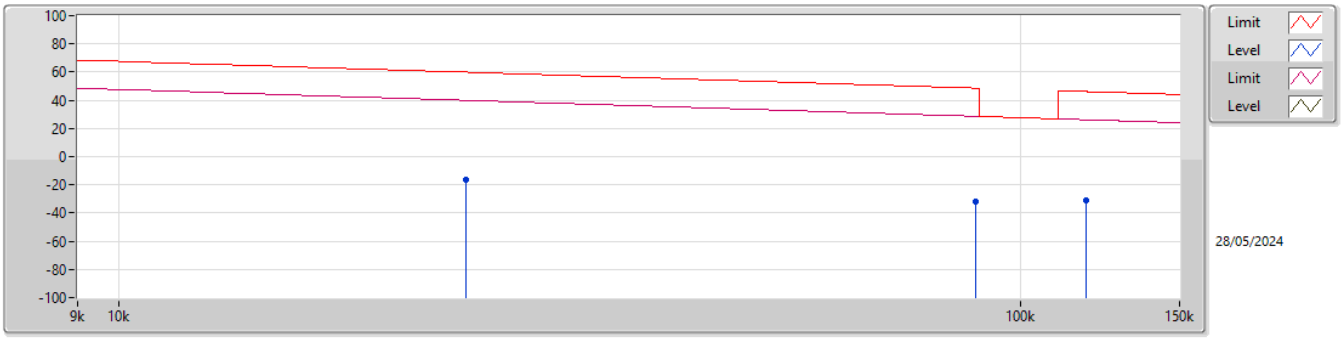

Type	Freq	Level	Limit	Margin	Factor	Dist	Condition	Azimuth	Height	Raw	AF	CL	PA
	(Hz)	(dBuV/m)	(dBuV/m)	(dB)	(dB)	(m)		(°)	(m)	(dBuV)	(dB)	(dB)	(dB)
PK	24.228k	-16.34	59.92	-76.26	-58.66	300	Horizontal	360	1.00	42.32	21.25	0.09	-
PK	89.088k	-31.99	48.60	-80.59	-60.13	300	Horizontal	360	1.00	28.14	19.79	0.08	-
PK	118.134k	-31.17	46.16	-77.33	-60.02	300	Horizontal	360	1.00	28.85	19.90	0.08	-

13.553-13.567MHz_NFC_1TX

13.56MHz_Adapter

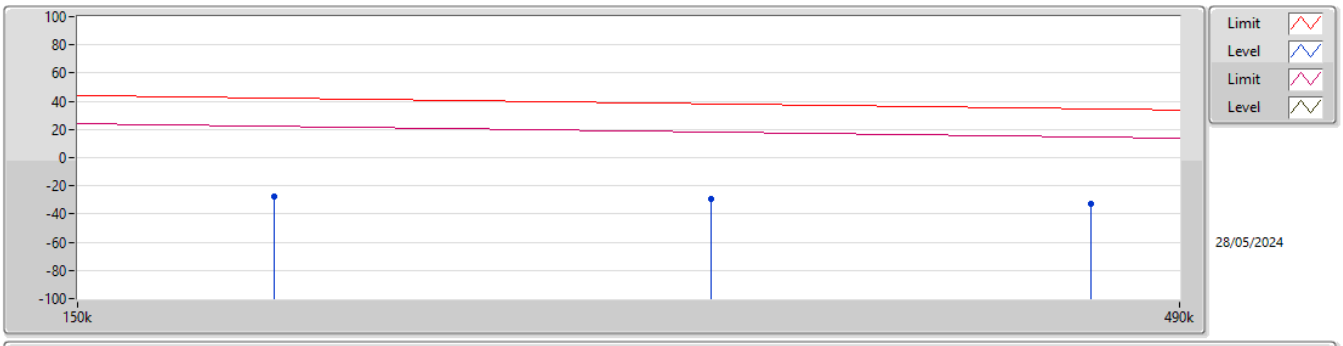

Type	Freq	Level	Limit	Margin	Factor	Dist	Condition	Azimuth	Height	Raw	AF	CL	PA
	(Hz)	(dBuV/m)	(dBuV/m)	(dB)	(dB)	(m)		(°)	(m)	(dBuV)	(dB)	(dB)	(dB)
PK	185.36k	-27.47	42.24	-69.71	-59.75	300	Horizontal	0	1.00	32.28	20.16	0.09	-
PK	296.2k	-29.07	38.16	-67.23	-59.70	300	Horizontal	0	1.00	30.63	20.20	0.10	-
PK	445.8k	-32.92	34.62	-67.54	-59.68	300	Horizontal	0	1.00	26.76	20.20	0.12	-

13.553-13.567MHz_NFC_1TX

13.56MHz_Adapter

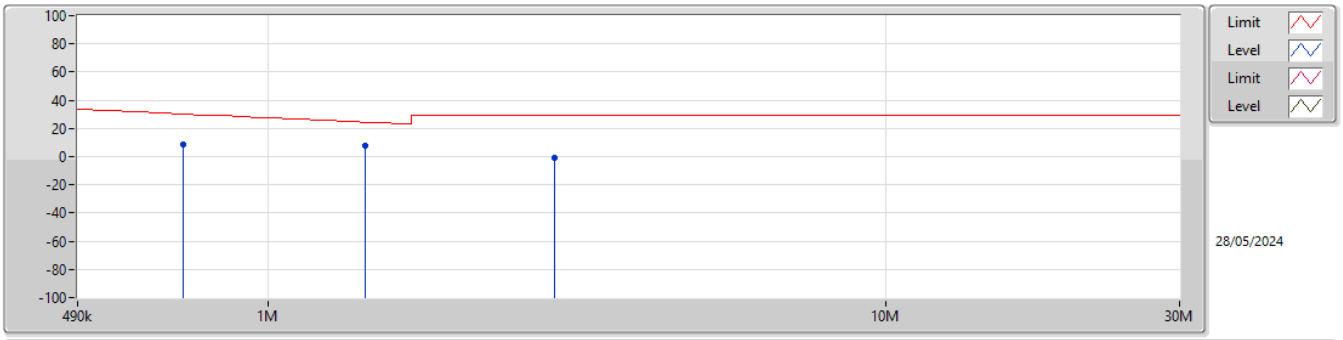

Type	Freq	Level	Limit	Margin	Factor	Dist	Condition	Azimuth	Height	Raw	AF	CL	PA
	(Hz)	(dBuV/m)	(dBuV/m)	(dB)	(dB)	(m)		(°)	(m)	(dBuV)	(dB)	(dB)	(dB)
PK	726.08k	8.48	30.38	-21.90	-19.87	30	Horizontal	360	1.00	28.35	19.99	0.14	-
PK	1.434M	8.05	24.47	-16.42	-19.76	30	Horizontal	360	1.00	27.81	20.05	0.19	-
PK	2.91M	-0.93	29.54	-30.47	-19.84	30	Horizontal	360	1.00	18.91	19.91	0.25	-

Summary

Mode	Result	Type	Freq (Hz)	Level (dBuV/m)	Limit (dBuV/m)	Margin (dB)	Dist (m)	Azimuth (°)	Height (m)
13.553-13.567MHz	-	-	-	-	-	-	-	-	-
NFC_1TX	Pass	PK	70.74M	36.84	40.00	-3.16	3	360	3.00

Result

Mode	Result	Type	Freq (Hz)	Level (dBuV/m)	Limit (dBuV/m)	Margin (dB)	Dist (m)	Azimuth (°)	Height (m)
NFC_1TX	-	-	-	-	-	-	-	-	-
13.56MHz_Adapter	Pass	PK	70.74M	36.84	40.00	-3.16	3	360	3.00
13.56MHz_Adapter	Pass	PK	142.52M	32.43	43.50	-11.07	3	360	3.00
13.56MHz_Adapter	Pass	PK	191.02M	32.33	43.50	-11.17	3	360	3.00
13.56MHz_Adapter	Pass	PK	336.52M	28.41	46.00	-17.59	3	360	3.00
13.56MHz_Adapter	Pass	PK	385.02M	28.82	46.00	-17.18	3	360	3.00
13.56MHz_Adapter	Pass	PK	487.84M	30.01	46.00	-15.99	3	360	3.00
13.56MHz_Adapter	Pass	PK	80.44M	32.36	40.00	-7.64	3	0	3.00
13.56MHz_Adapter	Pass	PK	142.52M	38.11	43.50	-5.39	3	0	3.00
13.56MHz_Adapter	Pass	PK	239.52M	36.43	46.00	-9.57	3	0	3.00
13.56MHz_Adapter	Pass	PK	288.02M	34.07	46.00	-11.93	3	0	3.00
13.56MHz_Adapter	Pass	PK	383.08M	34.18	46.00	-11.82	3	0	3.00
13.56MHz_Adapter	Pass	PK	476.2M	31.82	46.00	-14.18	3	0	3.00

13.553-13.567MHz_NFC_1TX

13.56MHz_Adapter

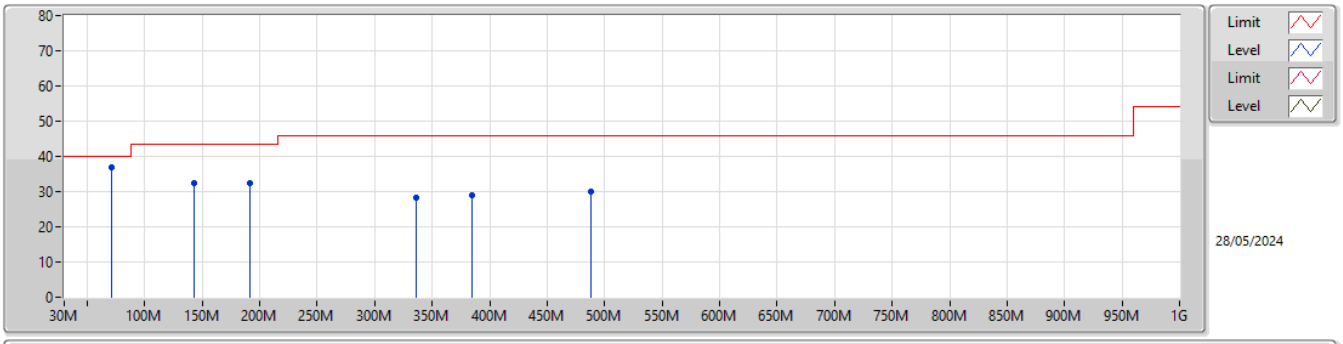

Type	Freq	Level	Limit	Margin	Factor	Dist
	(Hz)	(dBuV/m)	(dBuV/m)	(dB)	(dB)	(m)
PK	70.74M	36.84	40.00	-3.16	-14.69	3
PK	142.52M	32.43	43.50	-11.07	-9.06	3
PK	191.02M	32.33	43.50	-11.17	-10.57	3
PK	336.52M	28.41	46.00	-17.59	-4.94	3
PK	385.02M	28.82	46.00	-17.18	-3.72	3
PK	487.84M	30.01	46.00	-15.99	-1.47	3

13.553-13.567MHz_NFC_1TX

13.56MHz_Adapter

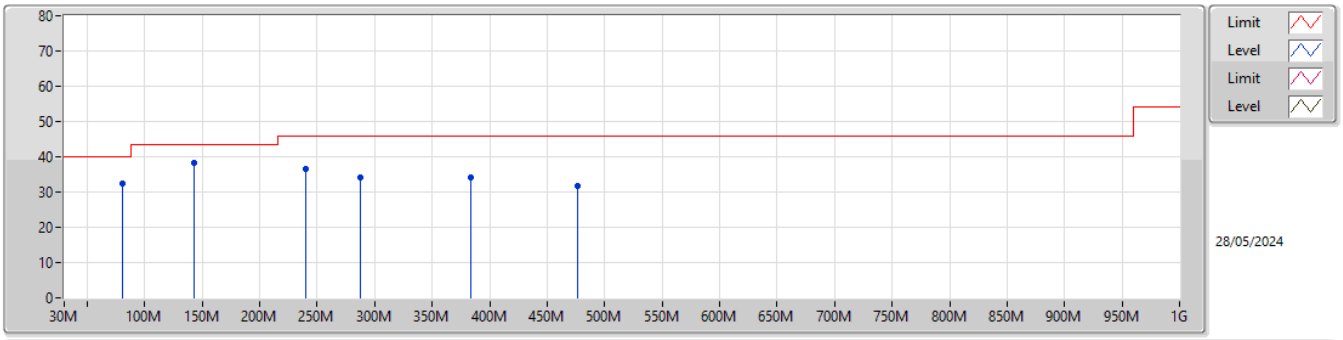

Type	Freq	Level	Limit	Margin	Factor	Dist
	(Hz)	(dBuV/m)	(dBuV/m)	(dB)	(dB)	(m)
PK	80.44M	32.36	40.00	-7.64	-13.90	3
PK	142.52M	38.11	43.50	-5.39	-9.06	3
PK	239.52M	36.43	46.00	-9.57	-8.07	3
PK	288.02M	34.07	46.00	-11.93	-6.11	3
PK	383.08M	34.18	46.00	-11.82	-3.78	3
PK	476.2M	31.82	46.00	-14.18	-1.44	3