NA-393

ULTRASONIC AROMA DIFFUSER

WITH WIRELESS SPEAKER

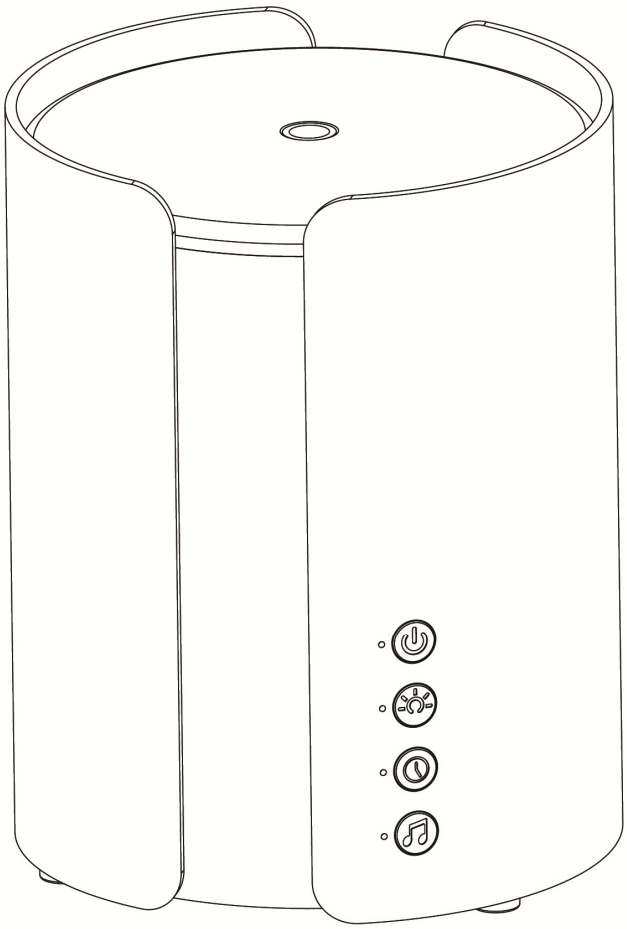

WARNING

Please carefully read this manual and keep it in a safe place.

- This appliance can be used by children aged from 8 years and above and persons with reduced physical, sensory or mental capabilities or lack of experience and knowledge if they have been given supervision or instruction concerning use of the appliance in a safe way and understand the hazards involved. Children shall not play with the appliance. Cleaning and user maintenance shall not be made by children without supervision.
- Only to be used as an ambiance diffuser; not to be inhaled.
- Use in an environment between 10°C and 30°C.
- The appliance is only to be used with the power supply unit provided with the appliance.
- The appliance must only be supplied at safety extra low voltage corresponding to the marking on the appliance.
- Use bottled mineral water or softened water (better than normal tap water to prevent scale formation). Do not exceed the maximum water level (150ml).
- Always pour the water before adding essential oils or home fragrance.
- Do not use pure essential oils, nor home fragrances without water.
- Continuous use of the diffuser may, in the long term, damage the product and shorten its lifespan.
- Unplug the appliance before any manipulation such as cleaning or refilling operations for example. Empty the tank when the appliance is not in use.
- Do not remove the lid or cover the diffuser when the appliance is in use.
- Change frequently the water in the tank to avoid any dirt building up that may damage the appliance.
- Clean the water tank every 3 days. Do not use chemical products (such as acids, alkaline, etc.) or any corrosive detergents to clean the appliance.
- To Descaling: Fill with equal parts white vinegar and water, operate the appliance for an hour, then turn off and let it sit for an hour.
- Be aware that high humidity levels may encourage the growth of biological organisms in the environment.
- Do not permit the area around the diffuser to become damp or wet. If dampness occurs, turn off the diffuser.
- Never leave water in the tank when the appliance is not in use.
- Empty and clean the diffuser before storage. Clean the diffuser before next use.

- Warning: Micro-organisms that may be present in the water or in the environment where the appliance is used or stored, can grow in the water tank and be blown in the air causing very serious health risks when the water is not renewed and the tank is not cleaned properly every 3 days.
- Empty the tank and refill every third day. Before refilling, clean it with fresh tap water or cleaning agents if required by the manufacturer. Remove any scale, deposits, or film that has formed on the sides of the tank or on interior surfaces, and wipe all surfaces dry.
- Do not immerse the appliance.
- In case of water infiltrations into the appliance, unplug the diffuser immediately and leave it to dry for at least 3 days before reusing it.
- The appliance is only to be used with the recommended vaporizing medium. The use of other substances may give rise to a toxic or fire risk.
- The light part is decoration only and not suitable for household room illumination.

The producer is not responsible for damages caused by wrong use of device

This manual is also available from the afte-sales service of your retailer

MAINTENANCE

You are advised to change frequently the water in the tank and clean the diffuser once or twice a week, particularly if you want to change the fragrance to be diffused.

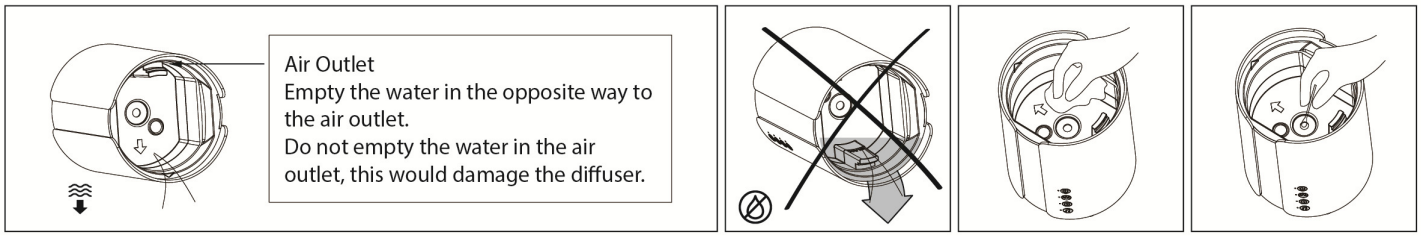

1. Turn the appliance off and unplug it.
2. Remove the cover and pour the water into the tank. **Empty the water in the opposite way to the air outlet. Do not empty the water in the air outlet, this would damage the diffuser.**
3. Clean the inside of the diffuser with a soft damp cloth and a little water. If needed, use a little white vinegar strongly diluted. Do not use corrosive detergents. Carefully rub the ceramic disc with a cotton bud being careful about not to scratch it.

PRECAUTIONS FOR USE

A detailed diagram of the components is available on the last page.

1. Insert the adaptor's connector into the DC jack at the bottom of the diffuser.
2. Place the diffuser on a flat and stable surface, away from the edge.
3. Remove the diffuser's cover and the inner cover.
4. Pour bottled mineral water or softened water (better than normal tap water to prevent scale formation) into the water tank up to the maximum level indicated (200 ml).
5. Then add a few drops of essential oils (from 2 to 5 drops) or home fragrances (from 3 to 7 drops).
6. Carefully replace the covers on the diffuser's base.
7. Plug the adaptor into the outlet or adaptor outlet.

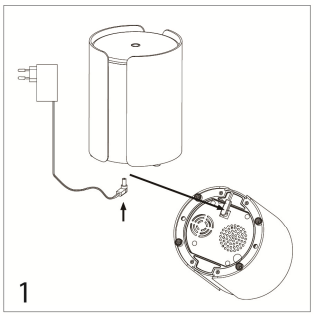

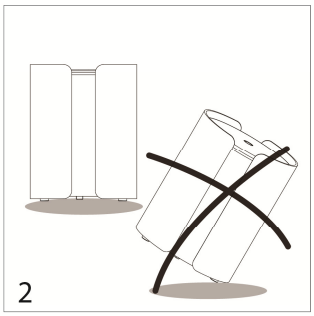

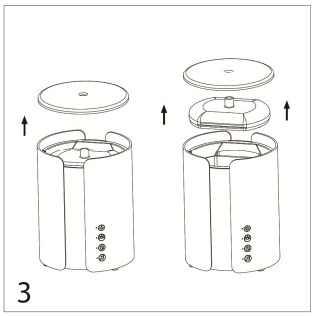

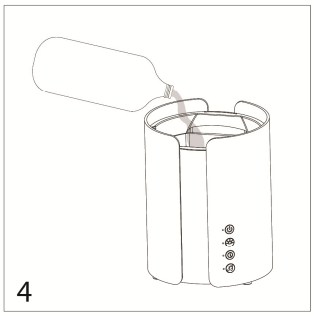

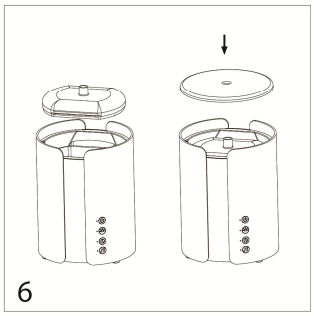

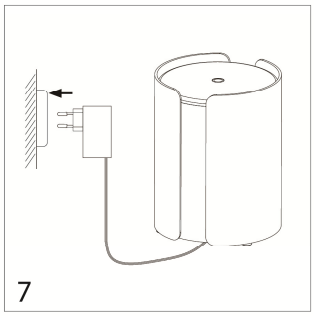

ON/OFF button

1. Press the ON/OFF button once to turn on the device and start the continuous diffusion with colour changing light on. White indication light next to the button is on.
2. Press a second time on the ON/OFF button to switch completely the diffuser and light off. Power indication light is off.

ATTENTION: When the diffuser is turned off, fan is continuing to run for 10 sec in order to blow out the mist in the tank.

Light button

1. Press once to select the colour ambiance of your choice. White indication light is on.
2. Press a second time to turn off the lights. Indication light is off.
3. Press a third time to turn on the colour changing ambiance. White indication is on.

Timer button

1. Press once to set 1 hour timer for continuous diffusion. Blue indication light is on.
2. Press a second time to set 2 hours timer for 30 sec on; 30 sec off intermittent diffusion. Purple indication light is on.
3. Press a third time to turn off the timer. Indication light is off.

Music button

1. Press once to turn on the wireless speaker, you will hear a notification sound. White indication light is flashing. It is now ready to connect.
2. On your Bluetooth enabled device (smartphone, tablet…), turn on the Bluetooth function, search for available Bluetooth devices, and select "Millefiori" from the list of devices.
3. You will hear another notification sound when the devices are successfully paired and the white indication light stop flashing. You can now play your own music on your speaker.
4. Press a second time to turn off the speaker mode and disconnected the device. You will hear another notification sound and white indication light is off.

FEATURES

- Model: NA-393
- Input power supply: 100-240V~ 50/60Hz
- Output power supply: 12V ⎓ 1A
- Ceramic disc lifespan: +/- 3000 hours
- Capacity: 200 ml
- Dimensions: Ø 135 x H 173 cm
- Recommended for a surface of: 30 m²

This equipment complies with FCC's RF radiation exposure limits set forth for an uncontrolled environment. The antenna(s) used for this transmitter must be installed and operated to provide a separation distance of at least 20 cm from all persons and must not be collocated or operating in conjunction with any other antenna or transmitter. Installers must ensure that 20cm separation distance will be maintained between the device (excluding its handset) and users.

Caution: The user is cautioned that changes or modifications not expressly approved by the party responsible for compliance could void the user's authority to operate the equipment.
Note: This equipment has been tested and found to comply with the limits for a Class B digital device, pursuant to part 15 of the FCC Rules. These limits are designed to provide reasonable protection against harmful interference in a residential installation. This equipment generates, uses and can radiate radio frequency energy and, if not installed and used in accordance with the instructions, may cause harmful interference to radio communications. However, there is no guarantee that interference will not occur in a particular installation. If this equipment does cause harmful interference to radio or television reception, which can be determined by turning the equipment off and on, the user is encouraged to try to correct the interference by one or more of the following measures:

- Reorient or relocate the receiving antenna.
- Increase the separation between the equipment and receiver.
- Connect the equipment into an outlet on a circuit different from that to which the receiver is connected.
- Consult the dealer or an experienced radio/TV technician for help.
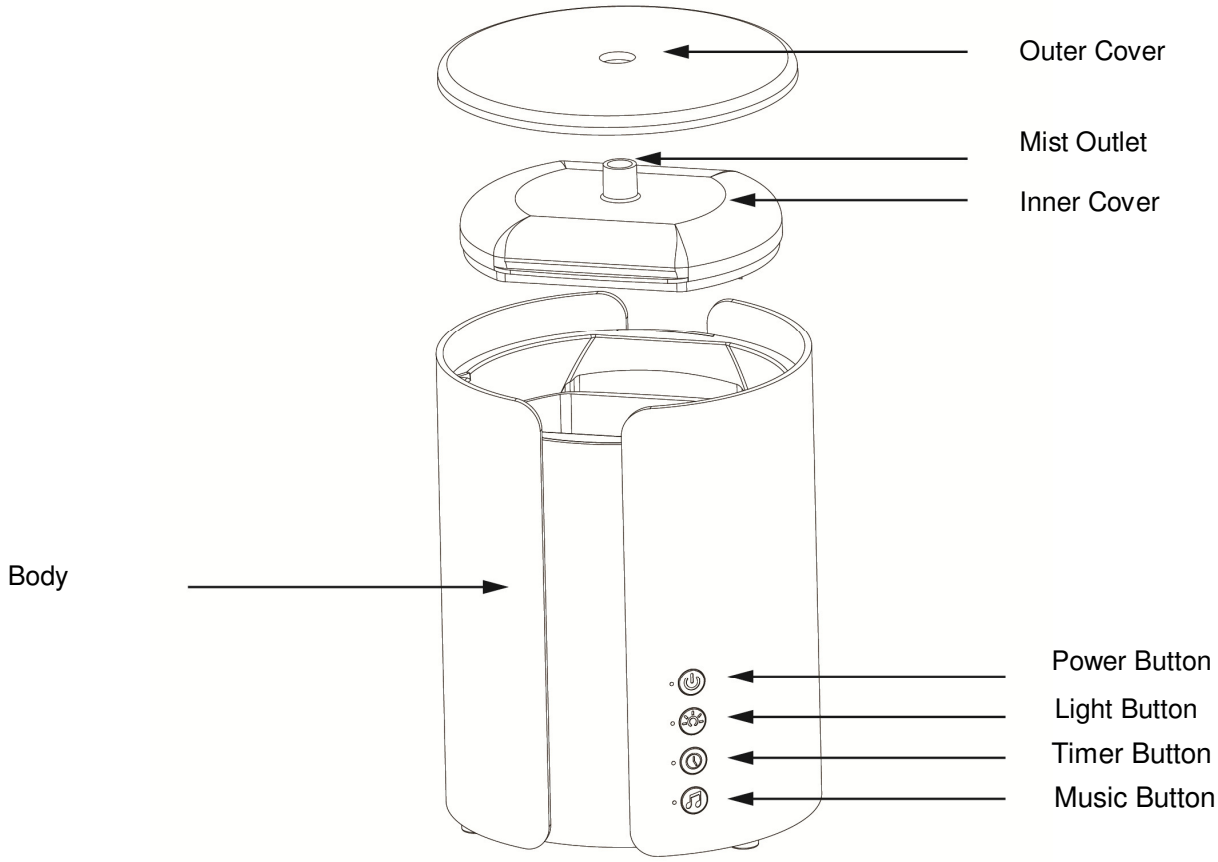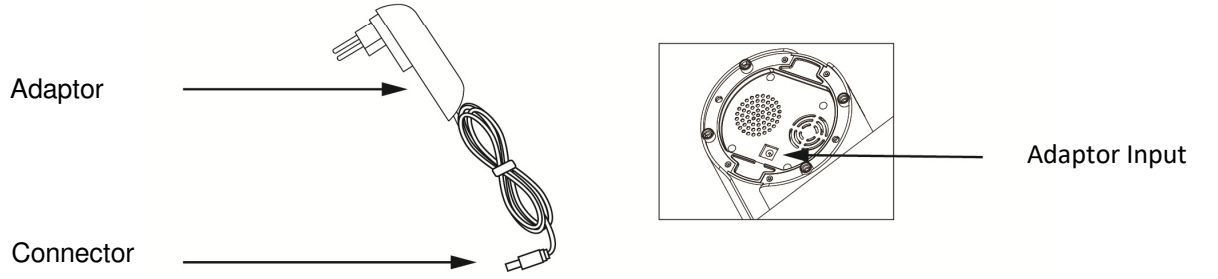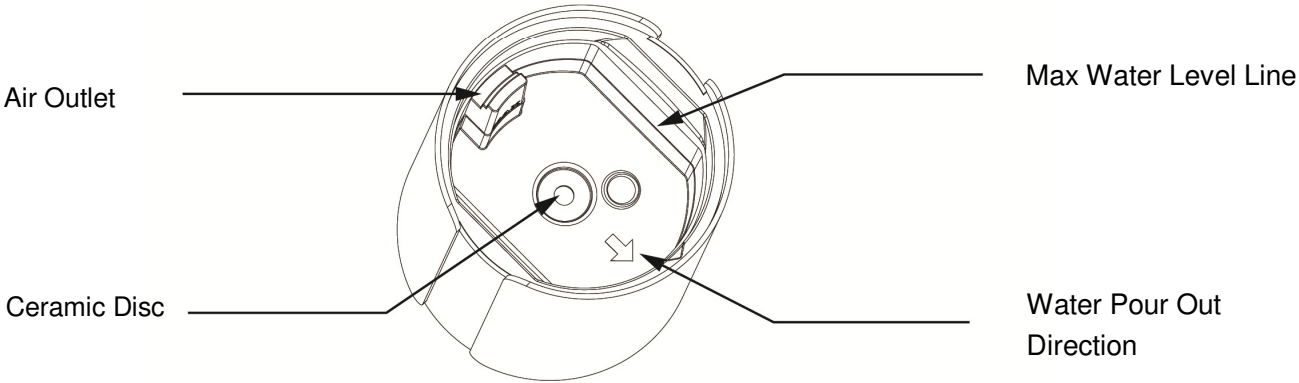
DETAILED DIAGRAM OF THE COMPONENTS