AL-436-00-902 EnoSense People Counter

EnOcean Sensor for people counting / PIR based

EnOcean 902 MHz

Part no. 12466 (beige) / 12467 (black) / 12468 (white)

Version 1.02, valid since FW/HW 1.0 / 1.1

Paffrather Str. 140, 51465 Bergisch Gladbach
Hauptstraße 76, 32479 Hille
info@deuta-controls.de; www.deuta-controls.net

Tel.:+49 2202 285 57- 61
Tel: +49 5734 51466 - 0
Fax:+49 5734 51466 - 28

© 2021 DEUTA Controls GmbH

All rights reserved

This Manual, including all figures and illustrations, is copyright-protected. Any further use of this Manual by third parties that violate pertinent copyright provisions is prohibited. Reproduction, translation, electronic and phototechnical filing/archiving (e.g., photocopying) as well as any amendments require the written consent of DEUTA Controls GmbH, Bergisch Gladbach, Germany. Non-observance will involve the right to assert damage claims.

DEUTA Controls GmbH

Paffrather Straße 140

51465 Bergisch Gladbach

Phone: +49 2202 28557-61

Fax: +49 2202 28557-79

E-Mail: info@deuta-controls.de

Web: www.deuta-controls.net

Every conceivable measure has been taken to ensure the accuracy and completeness of this documentation. However, as errors can never be fully excluded, we always appreciate any information or suggestions for improving the documentation.

E-Mail: info@deuta-controls.de

Table of contents

1 Validity of this documentation 5
2 Intended use 5
3 Disposal 6
4 Device description 6
4.1 Functionality 6
4.2 External product interface 6
4.3 Observe intended use 7
4.4 Observe statutory provisions for operating frequency range. 7
4.5 Non-conduction mounting surface 7
5 Technical data 8
5.1 Communication / EnOcean wireless interface 8
5.2 Sensor: Motion / PIR 8
5.3 User interfaces 8
5.4 Housing / connection technology 8
5.5 Power supply 8
5.6 Environmental conditions 9
5.7 Dimensions and weight 9
5.8 Approvals 9
5.9 Standards and guidelines 9
6 Functional description in detail 10
6.1 People counting 10
6.2 Send learn telegram 10
6.3 Table of supported EEP's (EnOcean Equipment Profiles) 10
6.3.1 Transmit / TX 10
6.3.2 People counting / data transmission rules 11
6.3.3 Receive/ RX 12
7 Service / changing batteries 13
8 Safety remarks 13

Paffrather Str. 140, 51465 Bergisch Gladbach
Hauptstraße 76, 32479 Hille
info@deuta-controls.de; www.deuta-controls.dnet
Tel.:+49 2202 285 57- 61
Tel: +49 5734 51466 - 0
Fax:+49 5734 51466 - 28

9 Device labels 14
10 FCC (United States) Regulatory Statement 15
11 Dimensions / drawings 16
12 Ordering information 17
13 Revision history 18

Paffrather Str. 140, 51465 Bergisch Gladbach
Hauptstraße 76, 32479 Hille
info@deuta-controls.de; www.deuta-controls.dnet
Tel.:+49 2202 285 57- 61
Tel: +49 5734 51466 - 0
Fax:+49 5734 51466 - 28

1 Validity of this documentation

This documentation is only applicable to the product

AL-436-00-902 EnoSense People Counter

and is only applicable starting from products with FW/HW Version 1.0/1.1.

The device must only be installed and operated according to the instructions in these operating instructions.

2 Intended use

The **AL-436-00-902 EnoSense People Counter** must not be used in any relation with equipment that supports, directly or indirectly, human health or life or with applications that can result in danger for people, animals or real value.

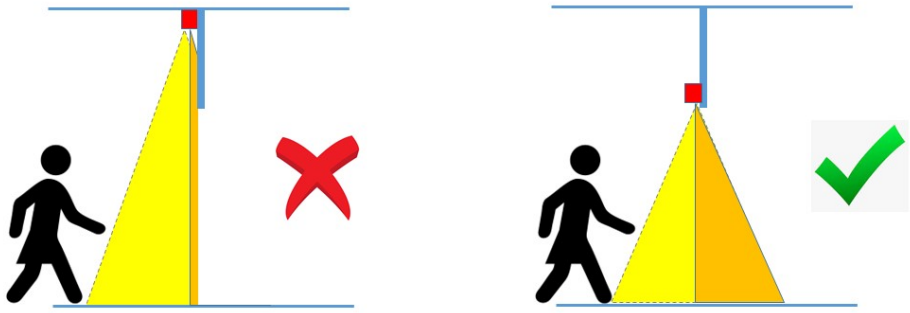

Paffrather Str. 140, 51465 Bergisch Gladbach
Hauptstraße 76, 32479 Hille
info@deuta-controls.de; www.deuta-controls.dnet

Tel.:+49 2202 285 57- 61
Tel: +49 5734 51466 - 0
Fax:+49 5734 51466 - 28

3 Disposal

Electrical and electronic equipment may not be disposed of with household waste. This also applies to products without this symbol.

Electrical and electronic equipment contain materials and substances that can be harmful to the environment and health. Electrical and electronic equipment must be disposed of properly after use.

Note only for EU: WEEE 2012/19/EU applies throughout Europe. Directives and laws may vary nationally.

4 Device description

4.1 Functionality

The **AL-436-00-902 EnoSense People Counter** offers the possibility to recognize passing people in both directions and to send the current count value via radio (EnOcean).

The sensor electronics, which are built into a plastic housing, are attached with a double-sided adhesive pad over the door (vertical detection) or on a door frame (horizontal detection).

Depending on your requirements, the sensor is available in a black, white or beige housing. In this case, the power is supplied by two internal AA batteries. Depending on the application, these typically last 5 years or more.

The information is transmitted via the EnOcean wireless standard (EEP: MSC, 47-D1-07-10).

The following information is currently available for the evaluation:

- Count value (with overflow): 8 bit, 0..255
- Battery voltage: 8 bit [mV/20]

4.2 External product interface

The external product interface consists of the following items:

- Lens opening of the passive infrared sensor for passing people detection
- Service button to send teach in / learn telegram

Paffrather Str. 140, 51465 Bergisch Gladbach
Hauptstraße 76, 32479 Hille
info@deuta-controls.de; www.deuta-controls.dnet
Tel.:+49 2202 285 57- 61
Tel: +49 5734 51466 - 0
Fax:+49 5734 51466 - 28

- Push area to open sensor (access to battery holder)

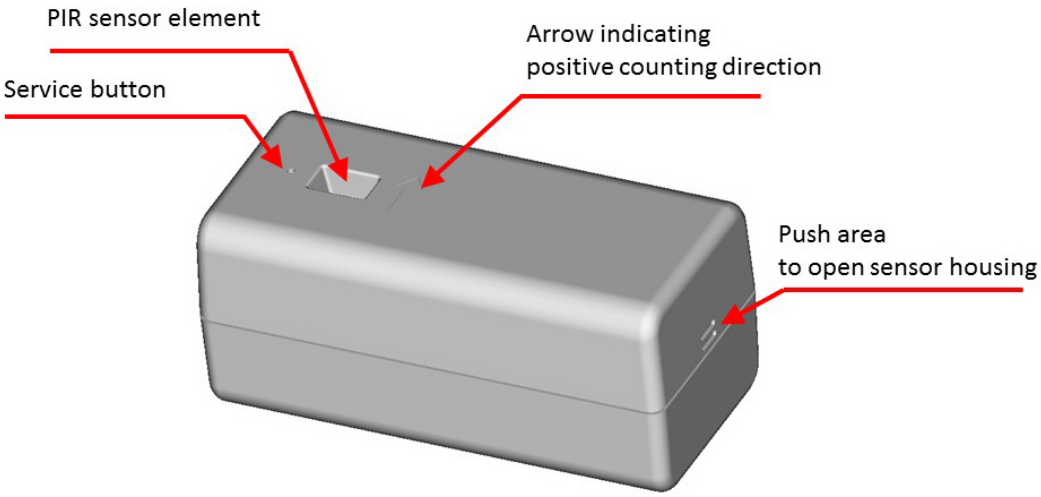

4.3 Observe intended use

The **AL-436-00-902 EnoSense People Counter** must not be used in any relation with equipment that supports, directly or indirectly, human health or life or with applications that can result in danger for people, animals or real value.

4.4 Observe statutory provisions for operating frequency range.

The **AL-436-00-902 EnoSense People Counter** must only be operated in compliance with the country-specific provisions regarding operation of radio equipment.

4.5 Non-conduction mounting surface

A non-conductive mounting surface is necessary.
Ensure the **AL-436-00-902 EnoSense People Counter** is mounted on a non-conductive surface. If it is not, performance may be adversely affected.

Paffrather Str. 140, 51465 Bergisch Gladbach
Hauptstraße 76, 32479 Hille
info@deuta-controls.de; www.deuta-controls.dnet
Tel.:+49 2202 285 57- 61
Tel: +49 5734 51466 - 0
Fax:+49 5734 51466 - 28

5 Technical data

5.1 Communication / EnOcean wireless interface

Type	EnOcean
Number	1
Transmit / receive center frequency	902.875 MHz
Maximum transmission power	+99 dBµV/m

Table 1: Technical data / communication

5.2 Sensor: Motion / PIR

Detection angle	120 degrees
Detection range	0.5 – 2 m

Table 2: Technical data / PIR sensor

5.3 User interfaces

Service button	Yes
Service LED	-

Table 3: Technical data / user interfaces

5.4 Housing / connection technology

Connection technology	-
Housing	Plastic, PC, white / black / beige

Table 4: Technical data / housing

5.5 Power supply

Power supply voltage	2x AA, 1,5V internal batteries
Power consumption	Typ. 1 mW, 50 µA standby

Table 5: Technical data / power supply

Paffrather Str. 140, 51465 Bergisch Gladbach
Hauptstraße 76, 32479 Hille
info@deuta-controls.de; www.deuta-controls.dnet
Tel.:+49 2202 285 57- 61
Tel: +49 5734 51466 - 0
Fax:+49 5734 51466 - 28

5.6 Environmental conditions

Operating temp.	15°.. 40 °C
Storage temp.	-20 ..+70 °C
Rel. humidity	0..99 % rel. humidity, non condensing
Protection class	IP20

Table 6: Technical data / environmental conditions

5.7 Dimensions and weight

Weight	87 g
Dimensions	36 x 37 x 80 mm

Table 7: Technical data / dimensions and weight

5.8 Approvals

FCC Rule parts	15.231
Equipment class	Part 15 Security / Remote control

Table 8: Technical data / tests and approvals

5.9 Standards and guidelines

EMC	EN IEC 61000-6-2 :2016 EN IEC 61000-3-2 :2019 EN 61000-3-3 :2013 EN 55032 :2012/AC :2013

Table 9: Technical data / standards and guidelines

Paffrather Str. 140, 51465 Bergisch Gladbach
Hauptstraße 76, 32479 Hille
info@deuta-controls.de; www.deuta-controls.dnet
Tel.:+49 2202 285 57- 61
Tel: +49 5734 51466 - 0
Fax:+49 5734 51466 - 28

6 Functional description in detail

6.1 People counting

The **AL-436-00-902 EnoSense People Counter** will detect and count people passing by the sensor element, based on PIR technology.
Depending on the direction, counter will be incremented or decremented by one for each event.

6.2 Send learn telegram

To connect the **EnoSense People Counter** to any building automation system, a so called learn telegram can be send by the device.

Simply push the service button. The **EnoSense People Counter** will immediately a learn telegram.

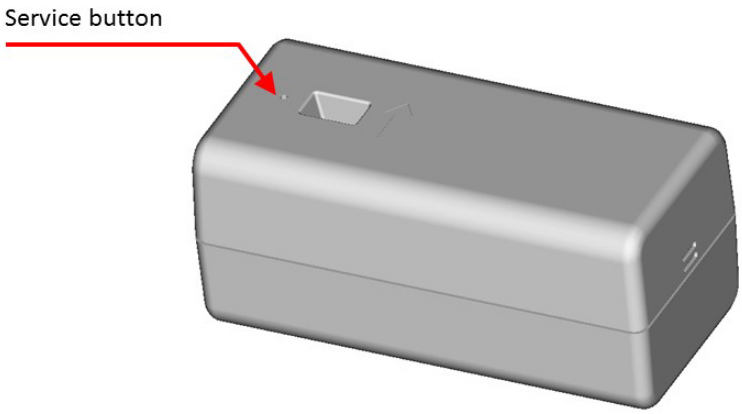

6.3 Table of supported EEP's (EnOcean Equipment Profiles)

6.3.1 Transmit / TX

The EnOcean wireless standard defines so called EnOcean Equipment Profiles (EEP). Each EnOcean based product sends and receives data according to at least one standardized data format. The **EnoSense People Counter** transmits data described as follows:

Paffrather Str. 140, 51465 Bergisch Gladbach
Hauptstraße 76, 32479 Hille
info@deuta-controls.de; www.deuta-controls.dnet
Tel.:+49 2202 285 57- 61
Tel: +49 5734 51466 - 0
Fax:+49 5734 51466 - 28

Cons. nr.	EEP	Description	Tx-ID
1	47-D1-07-10	Counting value, bit (BYTE 0)+ Power supply voltage, 8 bit (BYTE 3)	EURID

Table 10: Technical data / EnOcean EEP for TX

The following table describes in detail data send by the EnoSense People Counter according to the EEP 47-D1-07-10:

Offset	Size	Bitrange	Data	Shortcut	Descriptio n	Valid range	Scale	Unit
0	8	DB3.7…DB3.0	Supply voltage	SVC	Battery voltage	0..250	0…5.0	V
8	23	DB2.7…DB1.0	Not used (= 0)					
24	8	DB0.7…DB0.0	Counter value	CNT	Counter value	0..255	1	-

Table 11: EnOcean transmit data

6.3.2 People counting / data transmission rules

Operational description of People counting / data transmission rules

In general, the lens in the front of the **EnoSense People Counter** forms two detection zones B1 and B2. Depending on the sequence of triggering these two areas, the counter value will be increased or decreased.

As long as no motion is detected by the sensor element, no message will be transmitted by the EnoSense People Counter. The wireless transmitter will not be activated.

In the moment when a motion (people passing by) will be detected, the wireless transmitter will be activated and a data massage will be transmitted by the People Counter immediately. A second message (sub telegram) will be send after 25 ms with the same data contents.

If no further motion is detected, the People Counter will not send any further message.

If more people are counted in the following time period, the People Counter will send the new accumulated counter value after 65 seconds (and the second message again after 25 ms).

This behavior is also shown in the following picture:

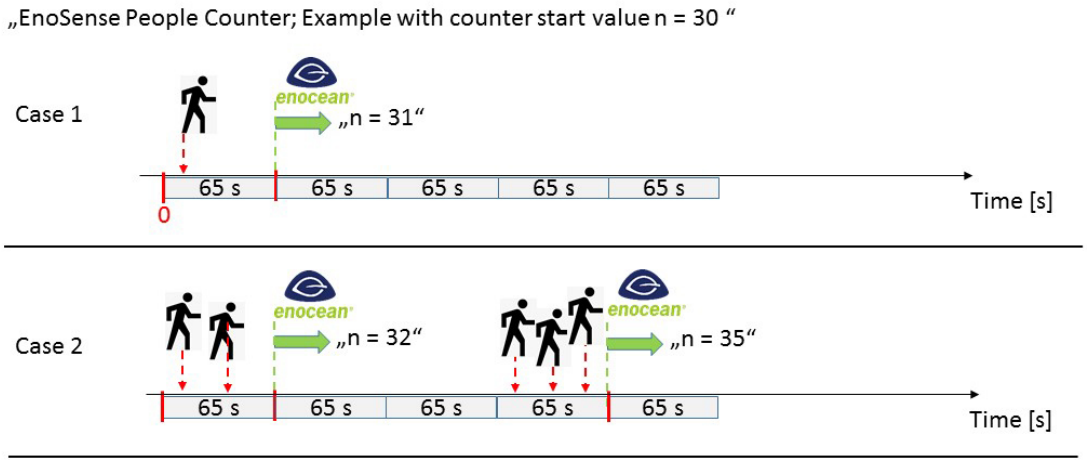

6.3.3 Receive/ RX

The **EnoSense People Counter** only sends EnOcean telegrams. No data is received / interpreted.

Cons. Nr.	EEP	Description
-	-	-

Paffrather Str. 140, 51465 Bergisch Gladbach
Hauptstraße 76, 32479 Hille
info@deuta-controls.de; www.deuta-controls.dnet
Tel.:+49 2202 285 57- 61
Tel: +49 5734 51466 - 0
Fax:+49 5734 51466 - 28

7 Service / changing batteries

Caution: When opening the device, you have to take care of electrostatic discharge. Otherwise, electronics can be damaged.

In case of discharged batteries, they can be replaced with two new AA batteries, 1.5 V.

You have to push the housing with your fingers within the marked area on the side of the EnoSense People Counter to open it.

2x AA batteries, 1.5 V
Take care of polarity!

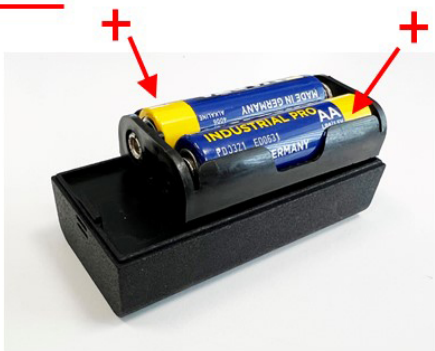

8 Safety remarks

CAUTION: Risk of damage or explosion if a battery of incorrect type is used.

This product contains AA type batteries. If a battery is swallowed, it can cause severe internal burns in just 2 hours and can lead to death.

Keep new and used batteries away from children.

Paffrather Str. 140, 51465 Bergisch Gladbach
Hauptstraße 76, 32479 Hille
info@deuta-controls.de; www.deuta-controls.dnet
Tel.:+49 2202 285 57- 61
Tel: +49 5734 51466 - 0
Fax:+49 5734 51466 - 28

9 Device labels

The following labels are placed on the bottom side of the EnoSense People Counter:

Label 1:

FCC ID: 2AZTH-AL-436-00-902
PMN: AL-436-00-902
FVIN: 1.0 HVIN: 1.1
12408 / AL-602-03-902
EnoSense People Counter / RoHS

Label 2:

00000032470
0x47110815

Label 2, Line 1: Serial number, 10 digits
Label 2, Line 2, EURID, EnOcean ID
QR-Code: <Serial number>;<EURID>

Paffrather Str. 140, 51465 Bergisch Gladbach
Hauptstraße 76, 32479 Hille
info@deuta-controls.de; www.deuta-controls.dnet
Tel.:+49 2202 285 57- 61
Tel: +49 5734 51466 - 0
Fax:+49 5734 51466 - 28

10 FCC (United States) Regulatory Statement

This device complies with Part 15 of the FCC Rules. Operation is subject to the following two conditions:

1. This device may not cause harmful interference, and
2. This device must accept any interference received, including interference that may cause undesired operation.

Changes or modifications not expressly approved by the party responsible for compliance could void the user's authority to operate the equipment.

Paffrather Str. 140, 51465 Bergisch Gladbach
Hauptstraße 76, 32479 Hille
info@deuta-controls.de; www.deuta-controls.dnet
Tel.:+49 2202 285 57- 61
Tel: +49 5734 51466 - 0
Fax:+49 5734 51466 - 28

11 Dimensions / drawings

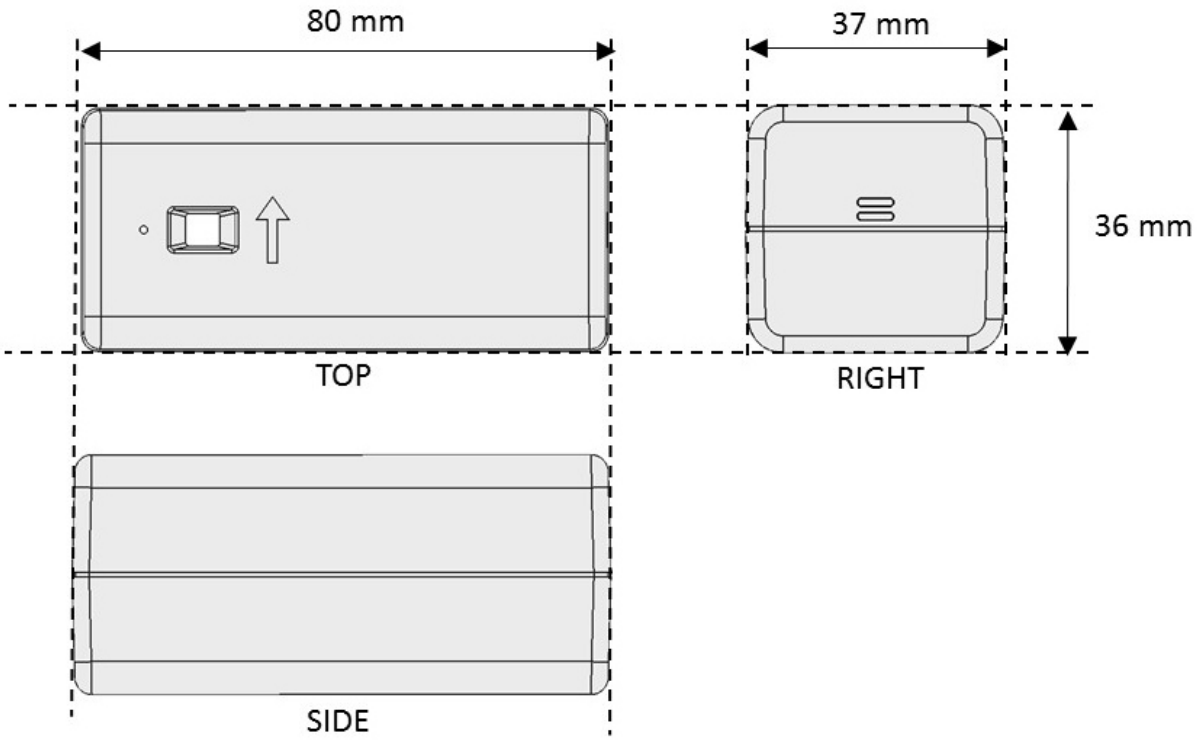

Paffrather Str. 140, 51465 Bergisch Gladbach
Hauptstraße 76, 32479 Hille
info@deuta-controls.de; www.deuta-controls.dnet
Tel.:+49 2202 285 57- 61
Tel: +49 5734 51466 - 0
Fax:+49 5734 51466 - 28

12 Ordering information

Part name	Part nr.	Description
AL-436-00-902 EnOcean sensor „EnoSense People Counter“ / beige / FCC	12466	Sensor EnOcean “EnoSense People Counter”, for counting people passing by (bi-directional); for mounting on smooth surfaces; EEP: 47-D1-07-10; Supply voltage 2x AA 1.5 V internal, Dimensions 36 x 37 x 80 mm, EnOcean 902 MHz, FCC, Housing: PC, beige (similar to RAL 9010 / pure white); incl. adhesive pad
AL-436-00-902 EnOcean sensor „EnoSense People Counter“ / black / FCC	12467	Sensor EnOcean “EnoSense People Counter”, for counting people passing by (bi-directional); for mounting on smooth surfaces; EEP: 47-D1-07-10; Supply voltage 2x AA 1.5 V internal, Dimensions 36 x 37 x 80 mm, EnOcean 902 MHz, FCC, housing: PC, Signal black (RAL 9004); incl. adhesive pad;
AL-436-00-902 EnOcean sensor „EnoSense People Counter“ / white / FCC	12468	Sensor EnOcean “EnoSense People Counter”, for counting people passing by (bi-directional); for mounting on smooth surfaces; EEP: 47-D1-07-10; Supply voltage 2x AA 1.5 V internal, Dimensions 36 x 37 x 80 mm, EnOcean 902 MHz, FCC, housing: PC, Signal white (RAL 9003); incl. adhesive pad;

Paffrather Str. 140, 51465 Bergisch Gladbach
Hauptstraße 76, 32479 Hille
info@deuta-controls.de; www.deuta-controls.dnet
Tel.:+49 2202 285 57- 61
Tel: +49 5734 51466 - 0
Fax:+49 5734 51466 - 28

List of tables

Table 1: Technical data / communication 8
Table 2: Technical data / PIR sensor 8
Table 3: Technical data / user interfaces 8
Table 4: Technical data / housing 8
Table 5: Technical data / power supply 8
Table 6: Technical data / environmental conditions 9
Table 7: Technical data / dimensions and weight 9
Table 8: Technical data / tests and approvals 9
Table 9: Technical data / standards and guidelines 9
Table 10: Technical data / EnOcean EEP for TX 11
Table 11: EnOcean transmit data 11

13 Revision history

Version	Author	Reviewer	Date	Major changes
1.00	Lehzen	Pohl	15.06.2021	Initial release
1.01	Lehzen	Pohl	19.11.2021	Adopted data transmission to optimize power consumption
1.02	Lehzen	Pohl	01.12.2021	Removed FCC §15.101 statement in 10; Added/changed functional description

---------- End of document ----------

Paffrather Str. 140, 51465 Bergisch Gladbach
Hauptstraße 76, 32479 Hille
info@deuta-controls.de; www.deuta-controls.dnet
Tel.:+49 2202 285 57- 61
Tel: +49 5734 51466 - 0
Fax:+49 5734 51466 - 28