EMUGE FRANKEN

Made
In
Germany

Operating Instruction

EMUGE

Thread Depth Plug Gauge “digital IW”

Introduction

The EMUGE thread depth plug gauge “digital IW” permits gauging and measuring of threads in one single step.
The thread depth plug gauge comply with the DIN ISO 1502 criteria defined for thread plug gauges.

The large LCD display enables a reliable and fatigue-proof reading of measurement values.

The additional option “Integrated Wireless” (IW) allows to easily and reliably transfer data via wireless transmission and to integrate measuring values directly into Microsoft® Excel® or other Windows® applications and provides a reconfirmation of the process on the LCD display.

The option IW is not activated in default factory setting.
For activation of this function, please refer to the operating instruction (see 8.5. wireless setup).

Permitted use is subject to compliance with all published information relating to this product.
Any other use is not in accordance with the permitted use. The manufacturer accepts no liability for damages resulting from improper use.
All statutory and other regulations and guidelines applicable to the area of use must be observed.

The EMUGE thread depth plug gauges fulfils the protection class **IP 67** according to **DIN EN 60529** i.e.

- Protection against the penetration of solid contaminants (dust-tight)
- Protection against the effects of temporary immersion in water

In order to achieve the best results with this tool it is important to read the operating instructions prior to first use.

We reserve the right to make changes to our products, especially due to technical improvements and further developments.

All illustrations and technical data are therefore without guarantee.

Content

	Page
1. Scope of delivery	4
2. Accessories for wireless transmission to a PC	4
3. Important hints prior to initial operation	5
4. Safety information	5
5. Technical data	6 - 7
6. Inserting / changing the battery	8 - 9
7. Functions	9 - 12
7.1 Auto ON / OFF	9
7.2 ON-OFF / RESET	10
7.3 DATA function	11
7.4 HOLD function	12
8. Menu functions	13 - 17
8.1 Start menu	13
8.2 Lock function	13
8.3 Unit	13
8.4 Enter PRESET	14
8.5 Wireless setup	14
8.6 Channel selection	15
8.7 Eco function	15
8.8 Measuring direction	16
8.9 Exit menu	16
8.10 Call up PRESET	17
9. Notes for disposal	17
10. Declaration of Conformity	18

1. Scope of delivery

The basic equipment of the Thread Depth Plug Gauge “digital IW” consists of:

- Thread Depth Plug Gauges “digital IW”
- Battery (CR 2032, 3V, 230 mAh)
- Operating instructions

2. Accessories for wirelessly transmission to a PC

Wireless receiver i-Stick
includes USB stick with MarCom Software Standard for use with a thread depth plug gauge

Order no.: L0091500.01

MarCom Software Professional
as accessory for wireless receiver i-Stick for use with up to 8 thread depth plug gauges

Order no.: L0091510.08

Operating instructions for i-Stick and MarCom software can be found at **www.mahr.com**

3. Important hints prior to initial operation

- In order to ensure a long use of this tool, any contamination on the thread depth plug gauge must be removed immediately after completion of usage. This can be done with a dry cloth. Subsequently, to conserve the metal components, they should be lightly oiled.
- Clean a dirty housing with a dry, soft cloth. Volatile organic solvents like thinners are not to be used, as these liquids can damage the housing.
- Any warranty claims become void when the digital measuring unit is opened.
- When the “Low-Bat” symbol appears the intended operation or function can no longer be guaranteed.

4. Safety information

Battery

- Not rechargeable
- Do not incinerate
- Dispose off as prescribed (see page 17)

Do not use an electric marking tool

!

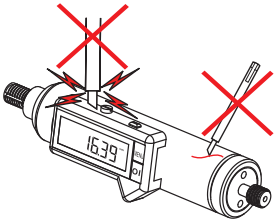

5. Technical data

- Inductive measuring system
  11 mm liquid crystal display

- Battery Lithium 3V, type CR2032, 230 mAh
  Operating time approx. 2 years*
  (2000 work. hrs/year)

  * is reduced when operating with the wireless interface

- Protection group IP67 acc. to DIN EN 60529
  6 = dust-tight
  7 = protected against the effects of temporary immersion

- Wireless interface

RF Frequency band	Channel 1	2403 MHz
	Channel 2	2439 MHz
	Channel 3	2475 MHz

- Communication range
  max. 6 m

  Quality of connection depends on the environment

- Operation temperature
  + 10°C … + 40°C

- Storage temperature
  – 10°C … + 60°C

- Resolution
  0.01 mm / .0005"

- Measuring range
  0 - 100 mm

- Error limit
  0.02 mm

- Max. measuring speed
  2.5 m/s (100"/s)

5. Technical data

GT-GR-LD „digital IW“

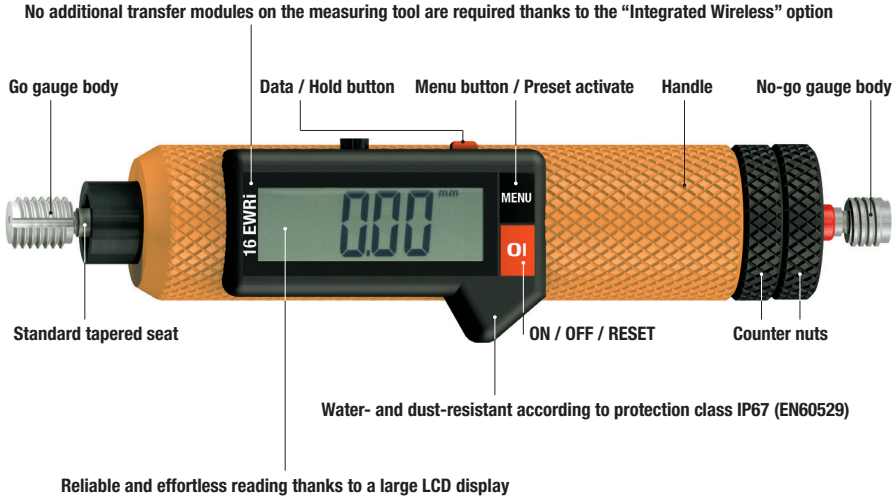

6. Inserting / changing the battery

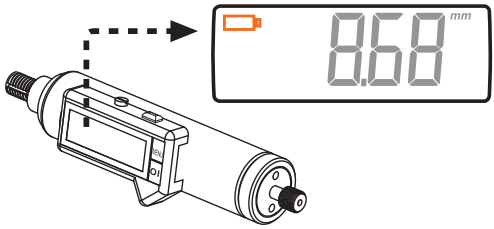

I

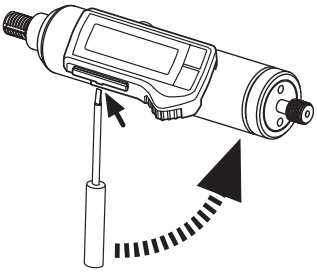

II

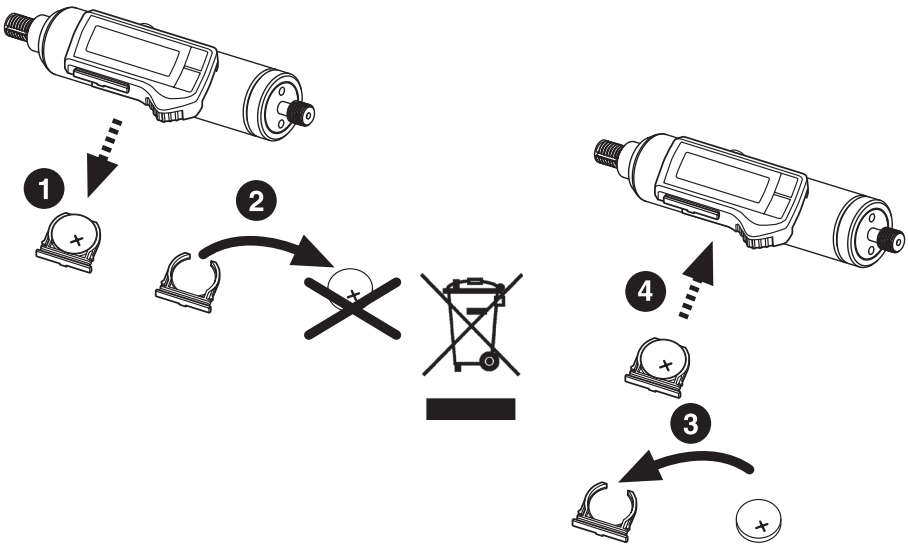

Lithium 3V, CR2032, 230 mAh

6. Inserting / changing the battery

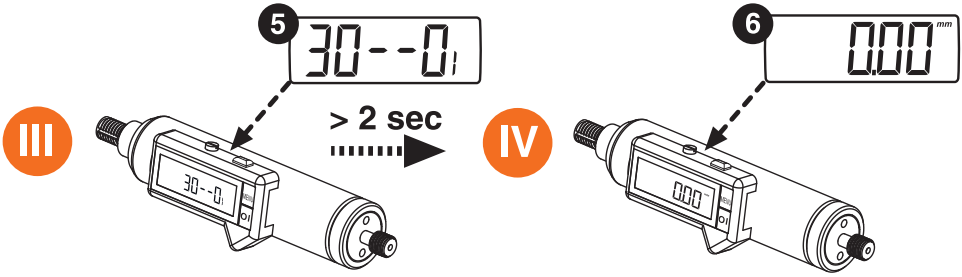

7. Functions

7.1 Auto ON / OFF

Moving the sliding barrel will automatically switch ON the instrument.
If the instrument has not been used for 8 minutes or more, it will be automatically switched OFF.

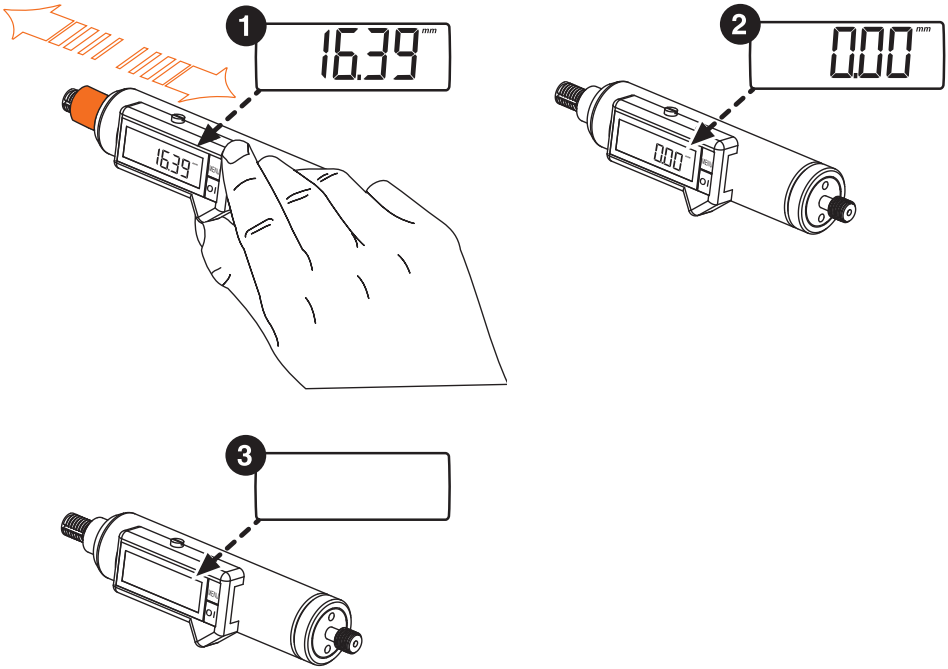

7. Functions

7.2 ON /OFF / RESET

ON

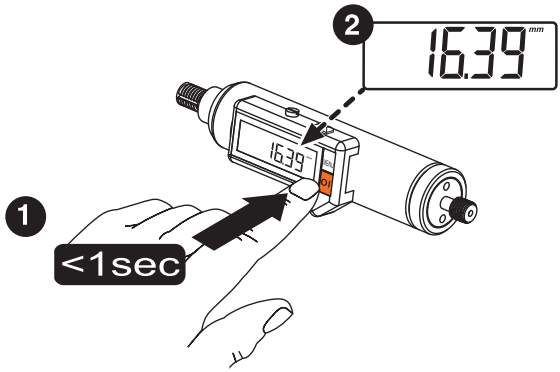

OFF

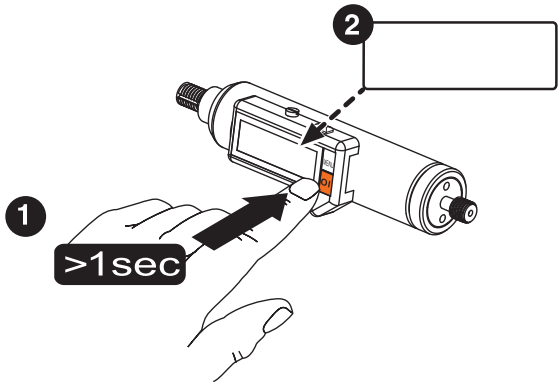

RESET

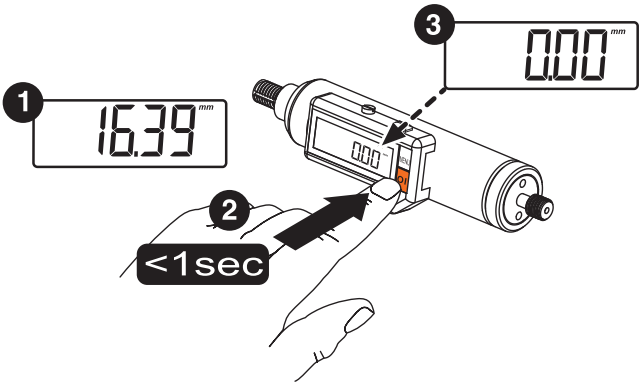

This function is recommended when the zero point is frequently repositioned (for example: comparative measurements)

7. Functions

7.3 DATA

Pressing this button while wireless mode is active, transmits the measured value.

Note:
When the wireless mode is not active, the measured value is frozen (see 7.4 HOLD function).

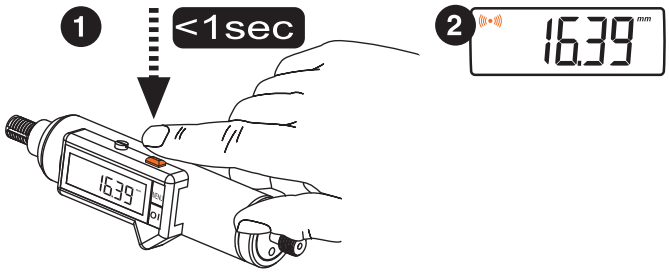

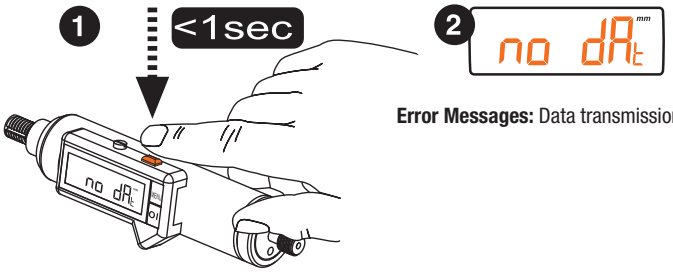

Error Messages: Data transmission is not possible!

7. Functions

7.4 HOLD

Note:
When the HOLD function is activated, the “MENU” and “OI” are not available.
The message “Hold” appears in the display.

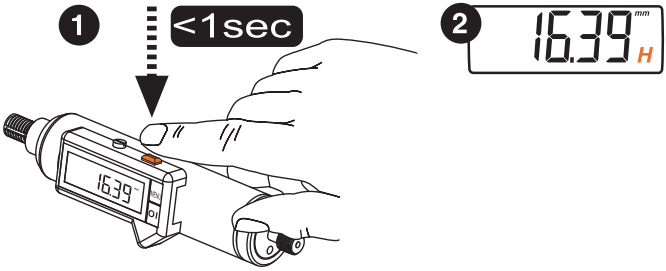

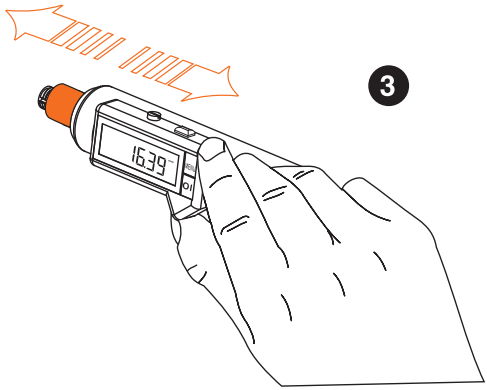

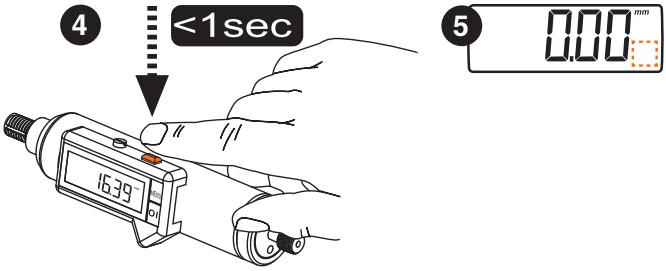

8. Menu functions

Intuitive menu guidance

Symbol ▶ Open the menu

Symbol ▲ Change the value

8.1 Start menu

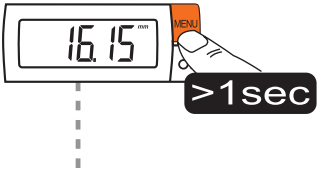

8.2 Lock function

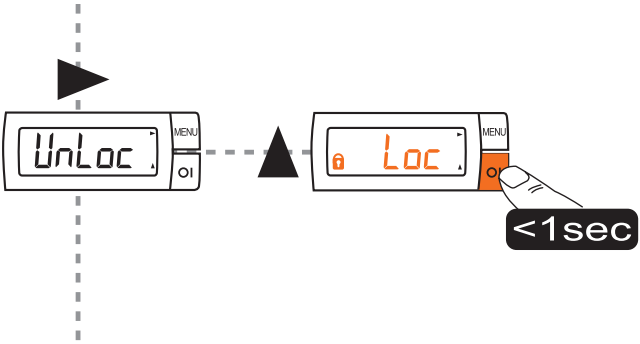

Note:
When the LOCK function is activated the “MENU” and “OI” are not available.
The error message “Loc” appears in the display.
The previous settings are maintained!

8.3 Unit

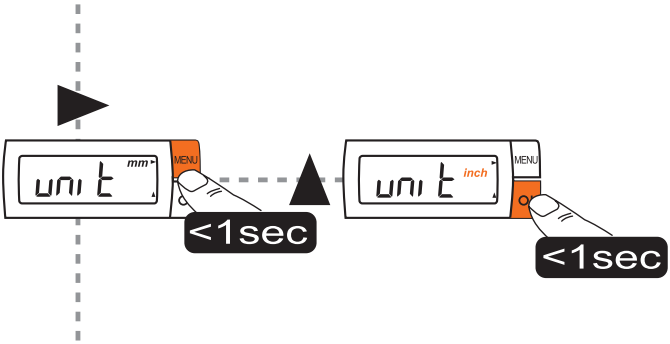

8. Menu functions

8.4 Enter PRESET

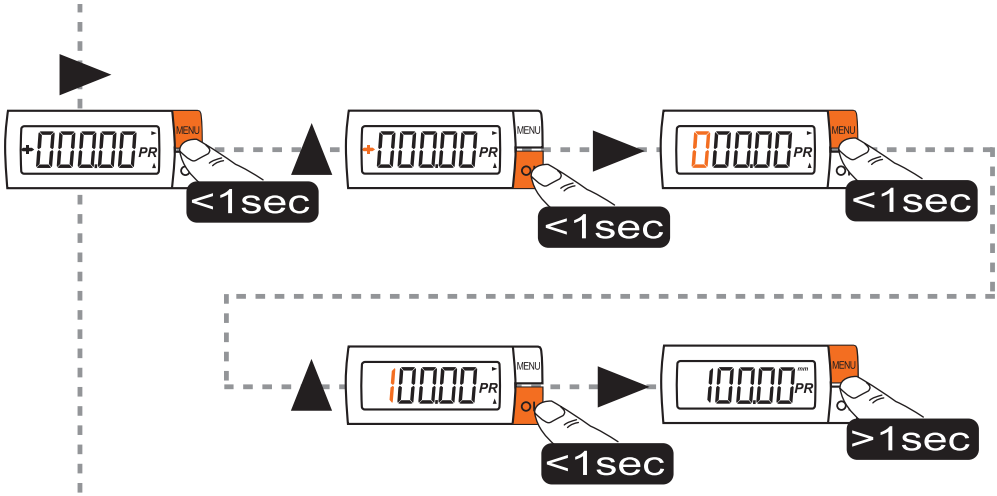

8.5 Funkaufbau

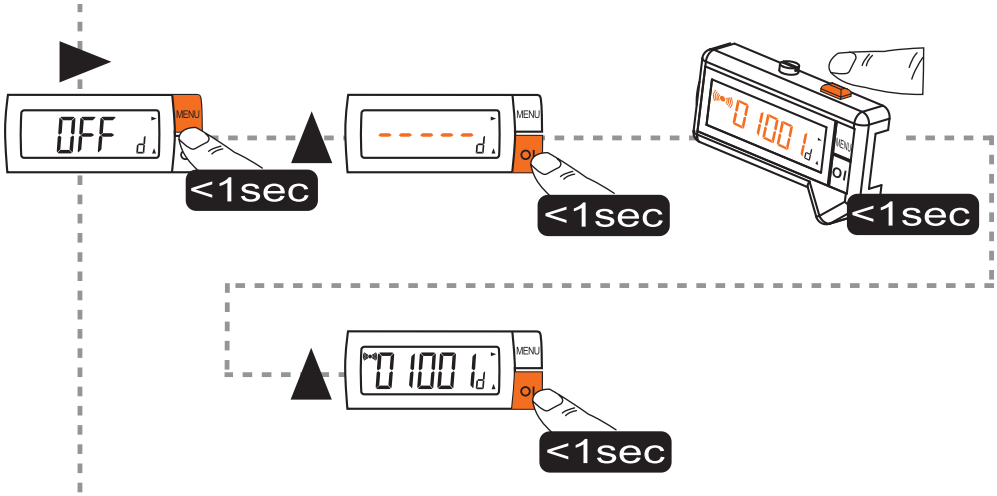

Note:
The wireless setup takes place by pressing the Data / Hold button once the address has been assigned in the MarCom Software. Address will appear in the display.

Operating instructions for i-Stick and MarCom software can be found at **www.mahr.com**

8. Menu functions

8.4 Channel selection

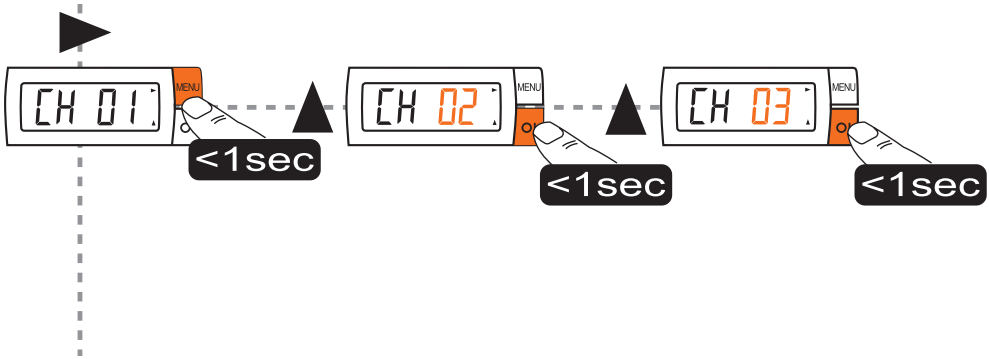

Note:
The standard factory setting is Channel CH 01.
It is only necessary to change this wireless frequency when it conflicts with other devices.

8.7 Eco function

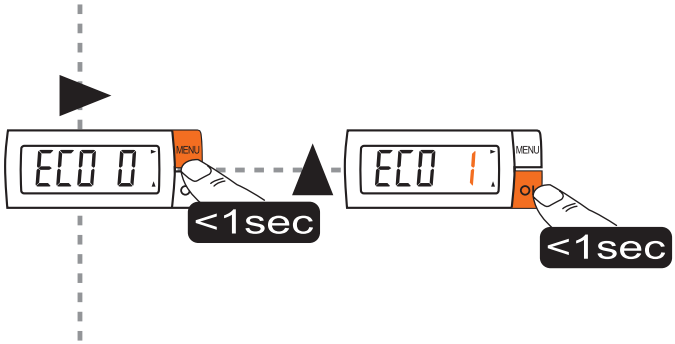

Note:
The rate of transmission is reduced in the ECO mode.
If the ECO mode is activated, it must also be activated in the MarCom Software.

8. Menu functions

8.8 Measuring direction

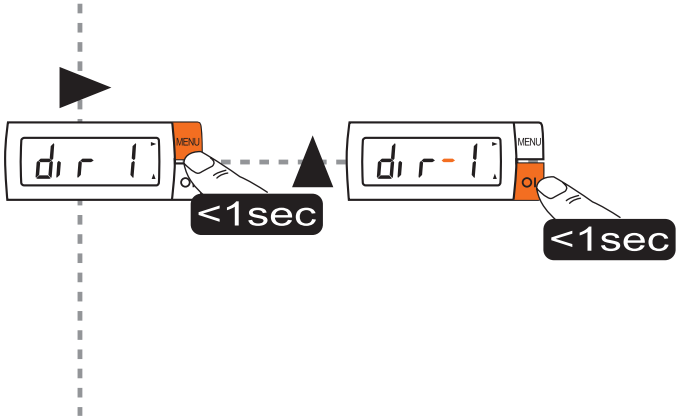

Note:
Changes the counting direction of the measuring system.

8.9 Exit menu

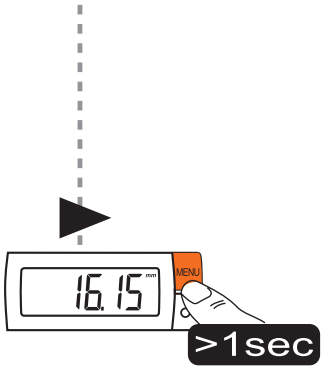

Note:
Press and hold the MENU button to leave the menu at any time and/or to accept the selected changes.

8. Menu functions

8.10 Call up PRESET

Note:
If a PRESET value has been entered, this can be called up by pressing the MENU button and will appear in the display.

Notes for disposal

The measuring instrument contains a non-rechargeable Lithium battery.
If the battery is empty, it may not be disposed of in the household waste!

Spent batteries contain toxic waste which can cause harm to the environment and cause damage to health.
Spent batteries and accumulators either must be returned to an outlet where batteries or accumulators are sold, or taken to a municipal collection point, these have an (unpaid) and legal obligation to take back batteries.
Please only dispose of spent batteries in the provided collection containers, when disposing Lithium batteries please cover up the Poles.

Removing the battery is described on pages 8 to 9 (6. Inserting / changing the battery).

All batteries can be recycled; raw materials such as iron, zinc or nickel can be obtained from recycled batteries, thus battery recycling helps with the protection of the environment.

Used electrical devices put on the market by EMUGE can be returned to us.
We will ensure an environmentally safe disposal.
The current EU directives “RoHS” and “WEEE” respectively the “Electrical and Electronic Equipment Act” are observed.

Declaration of Conformity

This device contains licence-exempt transmitter(s)/receiver(s) that complies with part 15 of the FCC Rules.
Operation is subject to the following two conditions:

1. This device may not cause harmful interference.
2. This device must accept any interference received, including interference that may cause undesired operation of the device.

Changes or modifications made to this equipment not expressly approved by
EMUGE-Werk Richard Glimpel GmbH & Co. KG
may void the FCC authorization to operate this equipment.

Note:

This equipment has been tested and found to comply with the limits for a Class B digital device, pursuant to part 15 of the FCC Rules. These limits are designed to provide reasonable protection against harmful interference in a residential installation. This equipment generates, uses and can radiate radio frequency energy and, if not installed and used in accordance with the instructions, may cause harmful interference to radio communications.
However, there is no guarantee that interference will not occur in a particular installation. If this equipment does cause harmful interference to radio or television reception, which can be determined by turning the equipment off and on, the user is encouraged to try to correct the interference by one or more of the following measures:

- Reorient or relocate the receiving antenna.
- Increase the separation between the equipment and receiver.
- Connect the equipment into an outlet on a circuit different from that to which the receiver is connected.
- Consult the dealer or an experienced radio/TV technician for help.

GT-GR-LD

FCC ID: 2AZTLGT-GR-LD

This device complies with Part 15 of the FCC Rules.

Operation is subject to the following two conditions:
(1) this device may not cause harmful interference, and
(2) this device must accept any interference received,
including interference that may cause undesired operation.

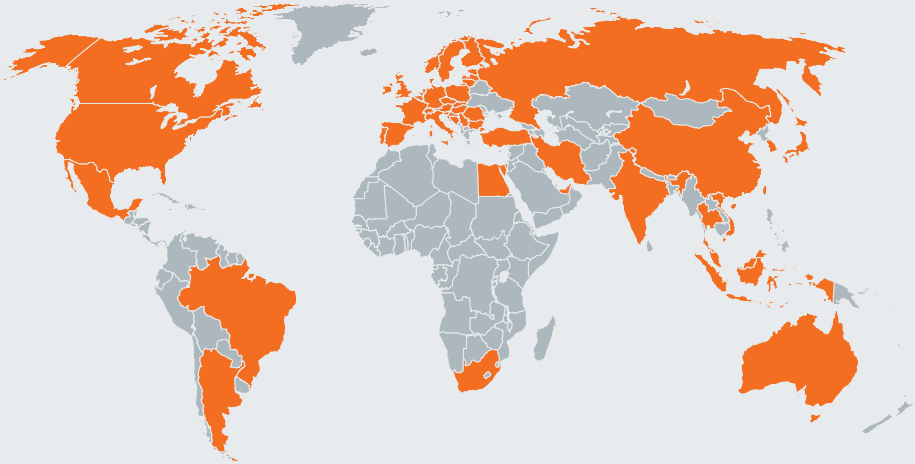

EMUGE-FRANKEN sales partners, please see www.emuge-franken.com/sales

EMUGE-Werk Richard Glimpel GmbH & Co. KG
Fabrik für Präzisionswerkzeuge

Nürnberger Straße 96-100
91207 Lauf
GERMANY

+49 9123 186-0
+49 9123 14313

FRANKEN GmbH & Co. KG
Fabrik für Präzisionswerkzeuge

Frankenstraße 7/9a
90607 Rückersdorf
GERMANY

+49 911 9575-5
+49 911 9575-327

info@emuge-franken.com www.emuge-franken.com