PUREWATERCRAFT

Pure Outboard User Guide

PREFACE

We’re excited to introduce you to a revolutionary boating experience.

This User Guide contains information needed for proper operation and system care of your Pure Outboard system. A thorough understanding of these instructions will help you maximize the performance and lifetime of your new Outboard system.

Please read this User Guide and follow all system care procedures. If you have questions or concerns about the operation and care of this product, please contact Pure Watercraft.

Should a problem arise with the product, please follow the troubleshooting procedures listed at the end of this User Guide. If the problem persists, contact Pure Watercraft.

All information in this User Guide is based on the latest product information available at the time of publishing the User Guide. Pure Watercraft reserves the right to make changes at any time without notice or obligation.

Please keep this User Guide readily available as a reference for anyone who operates the Pure Outboard system.

We hope you enjoy your time on the water!

Pure Watercraft

Table of Contents

1.0 INTRODUCTION **7**

1.1 General Information 7

1.2 Symbols 7

2.0 SAFETY **8**

2.1 General Safety Information 8

2.2 Pure Outboard Safety Instructions 8

2.3 General Safety Instructions for Boat Operation 9

2.4 Liability Warning 10

3.0 SPECIFICATIONS **11**

4.0 SYSTEM COMPONENTS & FUNCTIONS **12**

4.1 System Overview 12

4.2 Outboard 14

4.2.1 Overview 14

4.2.2 Outboard Energy Throughput 17

4.2.3 Power Tilt/Trim 17

4.2.4 Tilting 18

4.2.5 Trimming 19

4.2.6 Tilt Lock 20

4.2.7 Manual Tilt/Trim Release 21

4.2.8 Steering Lock 23

4.3 Battery Pack 25

4.3.1 Overview 25

4.3.2 About the Battery Pack 26

4.3.3 Battery Pack State of Health 27

4.3.4 Battery Pack Cumulative Energy Output 27

4.3.5 Additional Battery Pack care recommendations 27

4.4 Charger 28

4.4.1 Overview 28

4.4.2 Compatible Power Outlets & Corresponding Cables 30

4.4.3 Charging Status Light 31
4.5 Throttle 33
4.5.1 Overview 33
4.5.2 Emergency Stop 34
4.5.3 Start-in-Gear Protection 35
4.5.4 Reverse Mode Power Reduction 35
4.5.5 Auxiliary Power Output 35
4.6 Throttle Display 37
4.6.1 Description of Warnings 42
4.6.2 Throttle Display During Charging 48
4.7 Cables 50
4.7.1 Pure Watercraft-Supplied Cables 50
4.7.2 Cables Not Supplied by Pure Watercraft 51
5.0 OUTBOARD OPERATION 52
5.1 Before Startup 52
5.2 Starting the System 53
5.3 Maximizing Efficiency 55
5.4 Power Derating 55
5.5. Powering Off the System 57
6.0 CHARGING 58
6.1 Charging Battery Packs on the Boat 58
6.1.1 Connecting a One-Battery Pack System to the Charger 58
6.1.2 Connecting a System with Two or More Battery Packs to the Charger 59
6.1.3 Charging Operation 60
6.2 Charging Battery Packs Off of the Boat 61
6.3 Charging Schedule 61
6.4 Charging Duration 62
7.0 MOBILE APP 63
7.1 Mobile App Download and Account Creation 63
7.2 Initial Pairing the Mobile App with the Outboard System 63
7.3 Reconnecting the Mobile App with the Outboard System 64

7.4 Mobile App Dashboard 64
7.5 Trips & Trip Details 66
7.6 System Lifetime Data 67
7.7 Personalize System Settings 67
7.8 Submit Service Requests & Feedback 68
7.9 Software Updates 69
7.10 Telemetry Data Transfer 69
8.0 TRAILERING 71
8.1 Transom Saver 71
8.2 System Security During Transport 72
9.0 STORAGE 73
9.1 Storing the Batteries & Charger 73
9.2 Storing the Outboard 73
10.0 INSTALLATION 75
10.1 Preparing for System Installation 75
10.1.1 Selecting the Location for the Battery Pack(s) 75
10.1.2 Selecting the Location for Mounting the Throttle 76
10.1 3 Cable Routing Path 76
10.2 Installing the Battery Pack(s) 76
10.3 Running the Cables 76
10.4 Installing the Outboard 77
10.4.1 Necessary Tools: 77
10.4.2 Drilling Mounting Holes 78
10.4.3 Mounting the Outboard 79
10.4.4 Connecting to the Steering – Starboard Side Cable 82
10.4.5 Installing the Outboard on a Jackplate 87
10.4.6 Installing or Replacing the Propeller 87
10.5 Installing the Throttle 91
10.5.1 Option 1: Top Mount 91
10.5.2 Option 2: Side Mount 93
10.6 Connecting the Auxiliary Power 95

10.7 Connecting the Pure Outboard System Components 96
10.8 Mounting the Charger 97
11.0 SYSTEM CARE 99
12.0 TROUBLESHOOTING 101
13.0 WARRANTY 103
14.0 DECLARATIONS AND NOTIFICATIONS 103
14.1 Conformance 103
14.1.1 FCC & ISED Certification 103
14.1.2 IP-X7 Standard 104
14.2 Product Disposals 104
14.3 California Proposition 65 Warning 104
15.0 TERMS & TERMINOLOGY 105
16.0 CONTACTING PURE WATERCRAFT 106
17.0 LIST OF FIGURES IN THIS USER GUIDE 106

1 INTRODUCTION

1.1 General Information

This is the User Guide for the safe installation, operation, and care of your Pure Outboard electric outboard system. It covers 1) safety information; 2) system specifications; 3) the system's components and their functions; 4) how to operate and charge the system; 5) functions of the Mobile Application; 6) instructions for trailering and storage of the Outboard system; 7) installation instructions; 8) system care instructions; and 9) troubleshooting steps.

All personnel involved in the installation, setup, operation, and care of this product should read and understand this User Guide, particularly its safety instructions. Substandard performance, property damage, personal injury, or death may result from not following these instructions.
To ensure a long product lifetime, Pure Watercraft recommends that you use and care for the product according to the instructions described in this guide.

Pure Watercraft assumes no liability for damage caused by operation contrary to what is specified in this User Guide.

1.2 Symbols

The following symbols are used throughout the User Guide and on product labels.

DANGER	Indicates information that, if ignored, will result in death or serious injury.
WARNING	Indicates information that, if ignored, could possibly result in death or injury due to incorrect handling.
CAUTION	Indicates information that, if ignored, could possibly result in injury or physical damage due to incorrect handling.
NOTICE	Indicates information considered important, but not hazard-related.
	Indicates that the product contains high voltage.
	Indicates that the product contains lithium ion batteries.
	Indicates the necessity to read the User Guide prior to operating.
	Indicates that the product contains components that should not be disposed of in regular household waste.

2 SAFETY

2.1 General Safety Information

- Use the Pure Outboard electric propulsion system only in accordance with the instructions provided in this User Guide, as well as all applicable local laws and regulations.
- Only allow the Pure Outboard electric propulsion system to be installed, operated, cared for, and repaired by others who have also read and understood this User Guide. Ensure that this guide is included with this product if the product is ever given or sold to another user.
- Only allow the Pure Outboard electric propulsion system to be installed on a safe, well maintained, seaworthy boat rated to accept a motor system that weighs 300 pounds or more and a motor system that generates 25kW (equivalent to 50 horsepower) or more of propeller shaft output. To operate the Pure Outboard electric propulsion system on a boat that is rated for less than 25kW (equivalent to 50 horsepower) of propeller shaft output and/or in an area that restricts power output, contact Pure Watercraft in advance to explore the possibility of implementing a “factory setting” that limits the propeller shaft output to comply with the manufacturer’s rating of your hull and/or local jurisdiction licensing or operating regulations.
- Anyone who might be near the Pure Outboard electric propulsion system while any component of it is in operation must be informed of the potential dangers and instructed on how to avoid injury during its use.

2.2 Pure Outboard Safety Instructions

⚠ WARNING

- Only use the Cables provided by Pure Watercraft for connecting Pure Outboard system components.
- Before every trip, check all system components (Outboard, Battery Pack, Throttle, and Cables) for possible damage. In case of damage, do not touch any exposed parts or start the motor, and contact Pure Watercraft immediately.
- Prior to every trip, check the emergency stop Lanyard to ensure it is properly connected to the Throttle and there is no damage to the lanyard. Secure the emergency stop Lanyard somewhere on you (commonly worn on the wrist or around your leg) or attach it to the personal floatation device you are wearing. The purpose of the emergency stop is to turn off the motor in the case the operator moves out of operating range from the Throttle, such as an accidental fall. In case of other emergencies while under power, pull the lanyard to stop the motor.
- Do not disconnect the Cables from any part of the system (Battery Pack, Outboard, Throttle, or Charger) unless the system is powered Off.
- Do not open any part of the Outboard, Battery Pack, Throttle, or Charger. Components may only be opened by persons authorized by Pure Watercraft.
- Do not sit or stand on the Battery Pack. Do not place heavy objects on top of the Battery Pack.

- Do not operate, transport, or store the Battery Pack on its sides or upside down.
- Keep the Battery Pack away from external heat sources and respect safety instructions affixed to the Battery Pack.

⚠ CAUTION

- Only run the Outboard when the propeller is underwater.
- Ensure that no person's limbs are in the way of the Outboard before activating the tilt/trim to avoid injury.
- If the boat is moved in the water by external means other than the Pure Outboard (towing, sailing, running with another motor), raise the Outboard out of the water to prevent collision and damage.

2.3 General Safety Instructions for Boat Operation

The boat operator should be knowledgeable on how to operate the boat, Outboard, and accessories correctly.

- Familiarize yourself and others on board with the control elements of the Pure Outboard system, especially how to stop the motor quickly with the emergency stop if necessary in accordance with this User Guide (see Section 4.5.2).
- Only individuals who have been fully instructed on operating procedures in accordance with this User Guide, and local boating regulations, should operate the system.
- The boat operator is responsible for the safety of people on board and for any watercraft and people near the boat. Respect the rules of safe boating and follow the laws and regulations within the area in which the boat is operating.
- Pay special attention to your surroundings, particularly people and objects in the water.
- Check that all necessary boat safety equipment is on board prior to boating.

⚠ DANGER

Never enter the water or swim in a marina or near docks where boats are connected to electrical power. Faulty wiring can cause stray electrical current to enter the water, which can shock a person in the water and cause drowning.

If someone in the water appears to be shocked, first turn off the power at the dock. Throw a life preserver to the victim. Do not enter the water, as the risk of shock may still be present.

⚠ WARNING

- When the boat is near people and swimmers in the water, be sure the motor is completely shut off to avoid accidental engagement of the propeller. A spinning propeller can cause severe injury.
- Unlike conventional outboards, the Pure Outboard motor is near silent, particularly at low speeds. Take extra caution when starting the system, when boating around other boats, and while docking, as you and those around you may not hear the motor while it is operating.
- Never sit or stand in areas of the boat that are not intended for passengers while the motor is on or while the boat is in motion (seatbacks, transom, or sides of the boat). The Pure Outboard system is powerful enough to accelerate a vessel so quickly that passengers may be thrown from the boat and seriously injured.
- Do not operate the Pure Outboard system if it has experienced damage as a result of a collision or other form of impact.
- Do not operate the Pure Outboard system if it shows signs of visible damage. Exposed electronics may pose the risk of electrical shock.

⚠ CAUTION

- Limit boat speed when operating in shallow or unknown areas where obstacles may hit the Outboard.
- Do not exceed the boat manufacturer's instruction on maximum motor horsepower, loading limits, and capacity limits.

2.4 Liability Warning

Pure Watercraft does not take any responsibility or assume any liability for improper use of the Pure Outboard system. The user is obligated to obey and follow all of the above safety guidelines, as well as any applicable local rules or regulations.

Pure Watercraft shall not be held responsible for damages or injury for any reason, including damages or injuries resulting from improper use or failure to follow proper safety measures.

3 SPECIFICATIONS

Outboard	
Maximum Propeller Shaft Output Power	25 kW
Weight	112 lbs (50.8 kg)
Shaft Length	22 in (558.8 mm)
Dimensions & Angles	See Figures 4.3-4.6 in Section 4.2.1
Operating Temperature	19ºF–109ºF (-7ºC–43ºC)
Storage Temperature	-40ºF–158ºF (-40ºC–70ºC)
Battery Pack	
Nominal Energy per Battery Pack	8.8 kWh
Usable Energy per Battery Pack	8.0 kWh
Maximum Charging Voltage	393 V
Nominal Voltage	345 V
Weight	118 lbs (53.5 kg)
Operating Temperature	19ºF–109ºF (-7ºC–43ºC)
Storage Temperature	-40ºF–158ºF (-40ºC–70ºC)
Charging Temperature	19ºF–109ºF (-7ºC–43ºC)
Dimensions	22.7”L x 14.9”W x 9.1”H
Charger	
Maximum Power Output	6.6 kW
Input Voltage	90–265 VAC
Input Frequency	45-65 Hz
Input Current	32 A
Weight	24 lbs (10.9 kg)
Operating Temperature	19ºF–109ºF (-7ºC–43ºC)
Storage Temperature	-40ºF–158ºF (-40ºC–70ºC)
Dimensions	16.3”L x 11”W x 5.3”H
Throttle	
Output Voltage	12 V
Output Current	10 A
Operating Temperature	19ºF–109ºF (-7ºC–43ºC)
Storage Temperature	-40ºF–158ºF (-40ºC–70ºC)
Dimensions of Throttle base	6.1”L x 4.6” W x 1.8”H
Height of the Throttle handle from bottom of throttle base	7.1” H

4 SYSTEM COMPONENTS & FUNCTIONS

4.1 System Overview

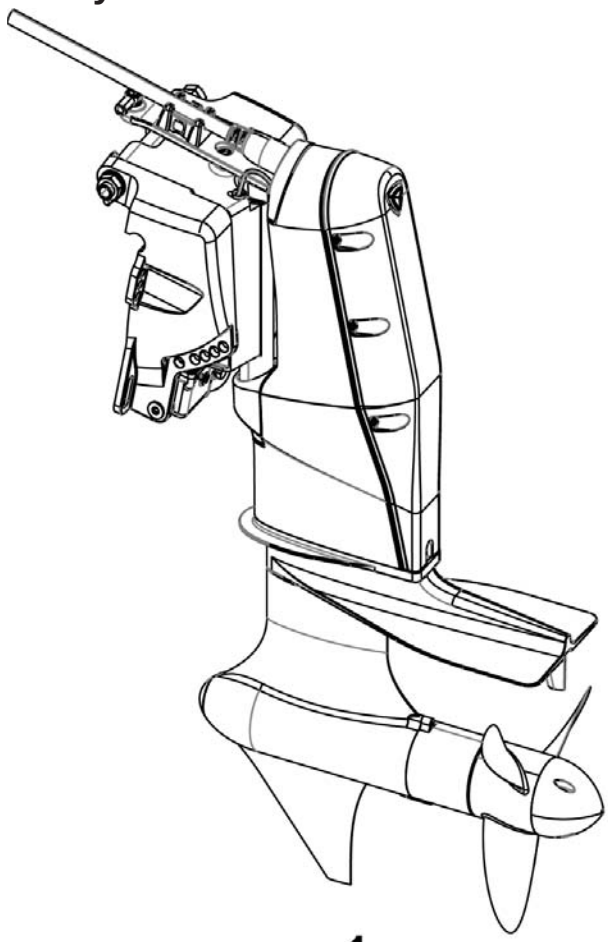

1

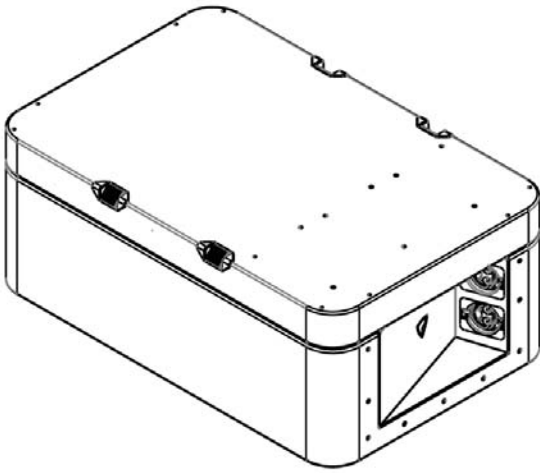

2

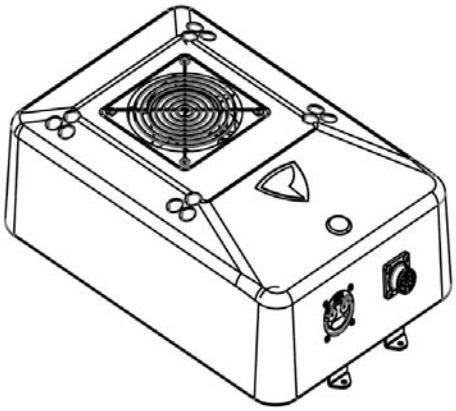

3

4

Figure 4.1 – Pure Outboard System Components

1. Outboard Motor (see Section 4.2)
2. Battery Pack (see Section 4.3)
3. Charger (see Section 4.4)
4. Throttle (see Section 4.5)
5. Emergency Stop Lanyard (see Section 4.5.2)
6. Power Data Cable (see Section 4.6.1)
7. Throttle Cable (see Section 4.6.1)
8. NEMA 5-15 Charger Cable (see Section 4.4.2)
9. NEMA 14-50 Charger Cable (see Section 4.4.2)
10. NEMA SS2-50 Charger Cable (see Section 4.4.2)
11. Auxiliary Power Output Cable (see Section 4.5.5)

4.2 Outboard

4.2.1 Overview

The Outboard outputs up to 25 kW of continuous power, equivalent to the propulsive power of a 20-50 HP gas outboard. It includes power tilt/trim to raise and lower the Outboard. Given its low placement to the waterline, it is designed to be splashed and momentarily submerged. It is designed to operate in fresh and saltwater environments.

On some boats sold by Pure Watercraft, the Outboard's maximum power output may be limited to the maximum engine power allowed for that vessel model. The maximum power output value is displayed on the Throttle display as shown in Section 4.5.6. For more information on setting and modifying power output limits, contact Pure Watercraft.

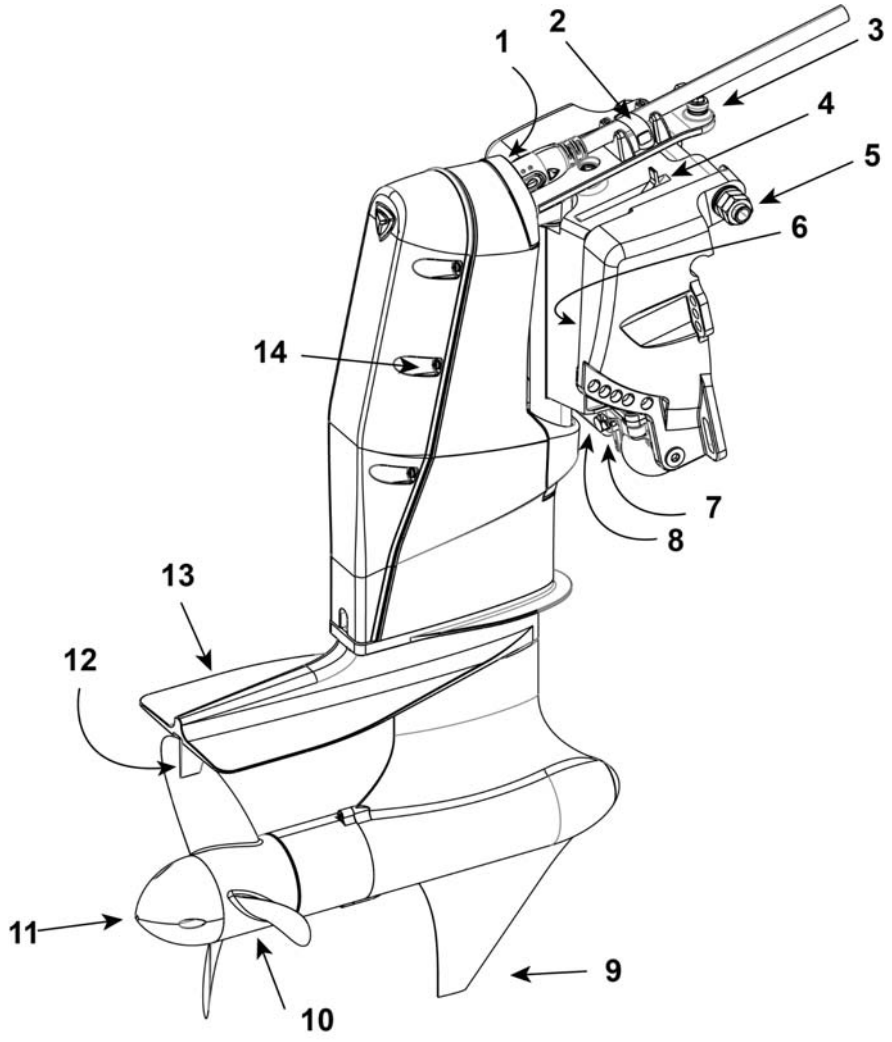

Figure 4.2 – Outboard Features

1. Receptacle for Power Data Cable that connects to the Battery Pack
2. Cable strap
3. Steering linkage connection

4. Steering lock shown in the unlocked position (see Section 4.2.8)
5. Steering tube connection
6. Tilt lock (see Section 4.2.6)
7. Sacrificial anode (see Section 11)
8. Tilt/trim release valve (see Section 4.2.7)
9. Skeg
10. Propeller (Section 10.4.6)
11. Tail cone
12. Sacrificial anode (see Section 11)
13. Anti-ventilation plate
14. Tamper-proof fasteners. Do not attempt to open, conventional hand tools will not work and will damage the Outboard and invalidate the Pure Watercraft Limited Warranty.

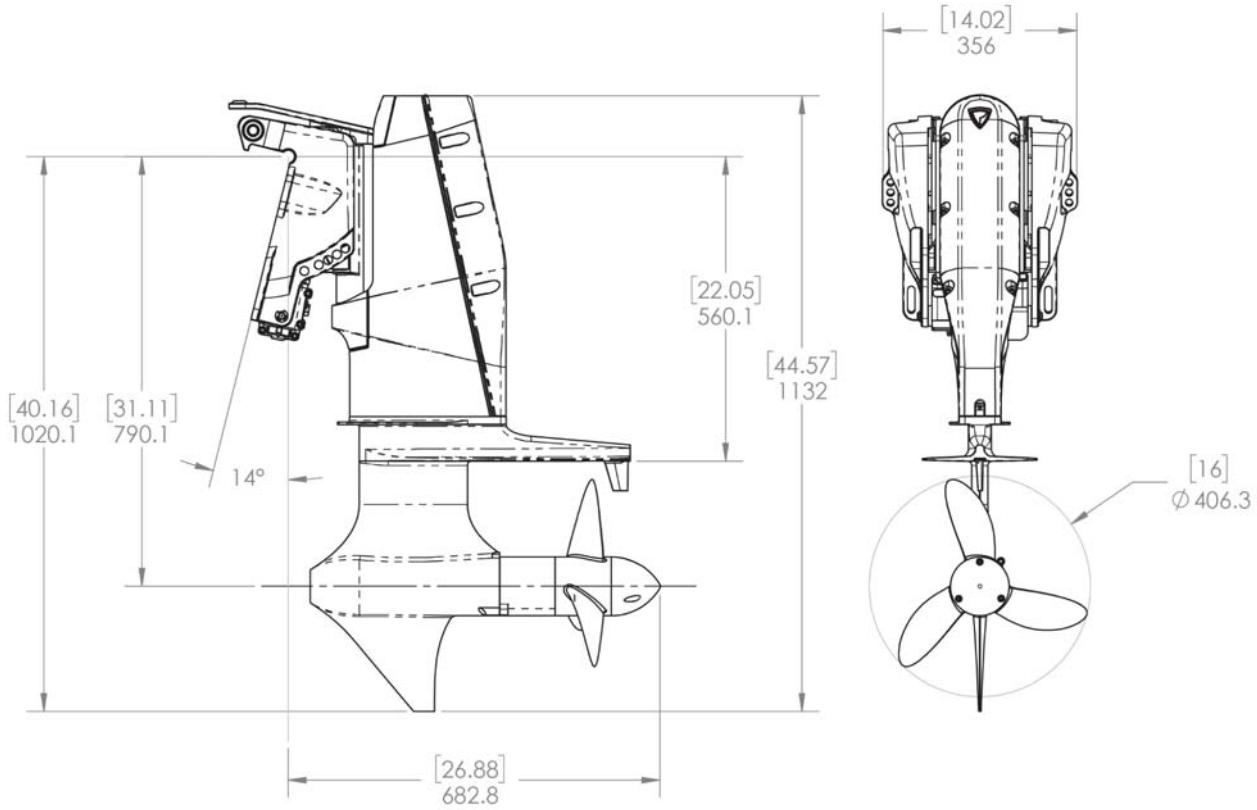

Figure 4.3 - Outboard Dimensional Drawing

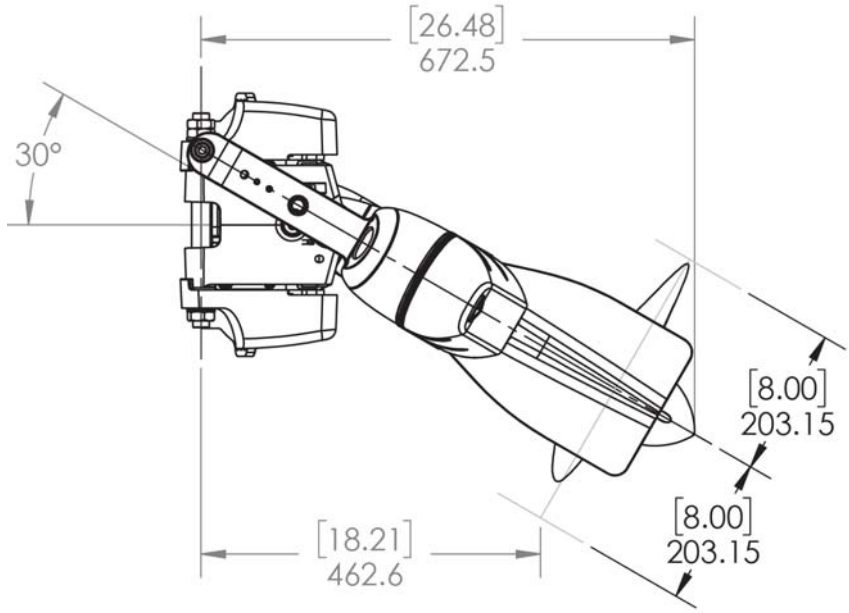

Figure 4.4 - Outboard Dimensional Drawing

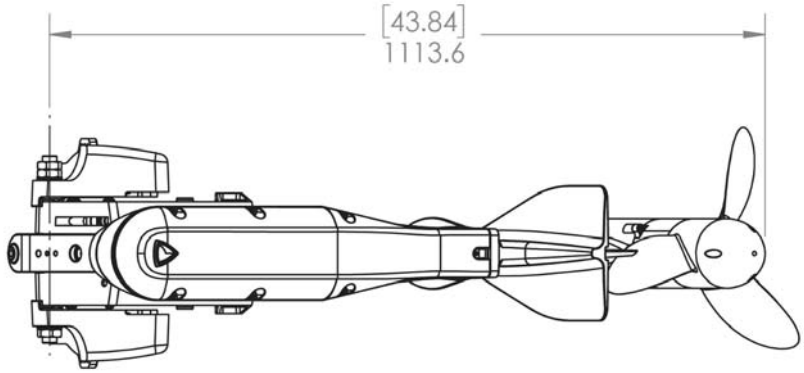

Figure 4.5 - Outboard Dimensional Drawing

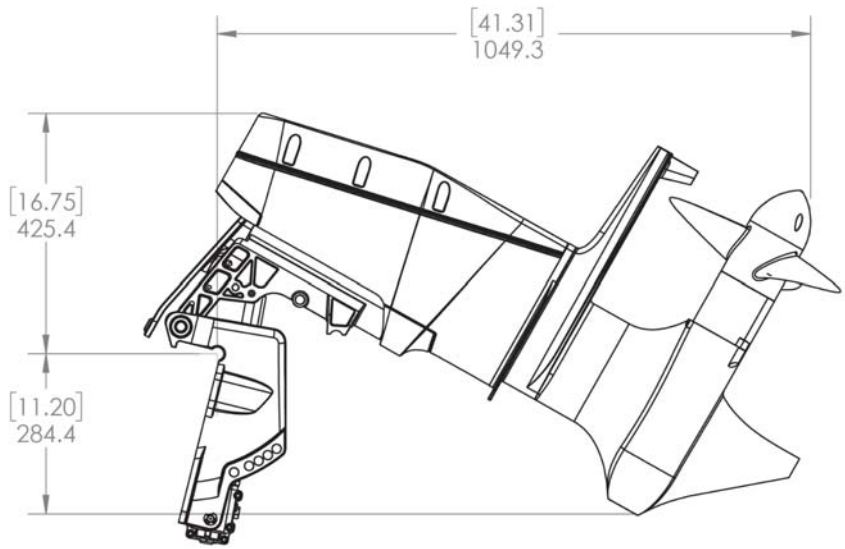

Figure 4.6 - Outboard Dimensional Drawing

4.2.2 Outboard Energy Throughput

Energy throughput is the amount of cumulative energy that has run through the Outboard, measured in kilowatt-hours (kWh). It is a way to measure system lifetime usage which accounts for the system power output, measured in kilowatts (kW), in addition to hours of operation. It is similar to an odometer in a car, but appropriate for outboard motors which operate on different vessel types.

The cumulative energy throughput of the Outboard can be viewed in the Pure Watercraft Mobile App.

4.2.3 Power Tilt/Trim

The Outboard includes an electronic tilt/trim mechanism which raises or lowers the Outboard to adjust its angle relative to the boat. This is controlled via the tilt/trim button on the Throttle handle.

1. Push to tilt/trim motor up.
2. Push to tilt/trim motor down.

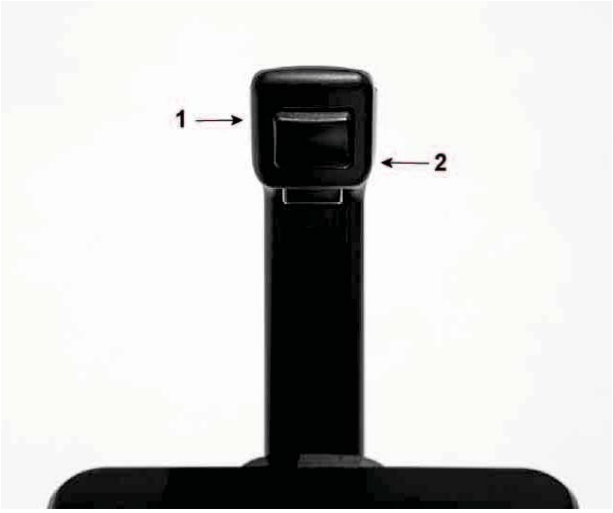

Figure 4.7 – Tilt/Trim Button on the Throttle

Tilt and trim are both controlled by the same component on the Outboard, but they have different functions. Tilting refers to the operator making large adjustments to the Outboard angle by raising the Outboard all or most of the way up and out of the water, whereas trimming involves the operator making very small adjustments to the Outboard angle while the boat is in motion.

4.2.4 Tilting

Tilting is generally performed when the boat is stationary in preparation for trailering or launching, or when operating at slow speeds in shallow water. The tilt range of the Outboard is 14.6° to 67.1° relative to a vertical plane. The Outboard cannot be raised into the tilt range while running at high power, but it can be lowered down into the trim range.

- To tilt the Outboard, put the Throttle in the neutral position and press the Power button until the Start Screen is shown.
- Verify that the Outboard is clear of any obstructions or people.
- Push the trim up or down button on the Throttle until the Outboard is tilted to the desired position, then release the button.

NOTICE

Tilting the Outboard from the fully down position to the fully up position should only take approximately 15 seconds. If the tilt/trim is laboring or taking longer than that, stop tilting and examine the Outboard for anything inhibiting the tilt operation.

4.2.5 Trimming

Trim refers to the running angle of the boat as it moves through the water. When the trim of the Outboard is adjusted, the bow (the front of the boat) will be either raised or lowered. The trim range of the Outboard is -2.7° to 14.6° relative to a vertical plane.

Instructions for proper trim:

- The Outboard operates most efficiently when the tail cone is operating parallel to the horizon.
- The degree angle shown on the Throttle display (see Figure 4.8) refers to the Outboard's angle relative to its perpendicular down position.
- For planing hulls, adjusting the trim can improve the efficiency of operation when on plane.
- Planing hulls operating on-plane with an improper trim angle may experience "porpoising," in which the bow bounces heavily on the surface of the water. To remedy this, trim the Outboard down until the bouncing stops.

⚠ WARNING

Improper trim may result in a pull on the steering wheel and loss of control.

Trimming the Outboard:

- To trim the Outboard down (bring it closer to the boat), press the trim button down.
- To trim the Outboard up (bring it away from the boat), press the trim button up.
- The trim angle is visible on the Throttle display when the trim button is actuated.

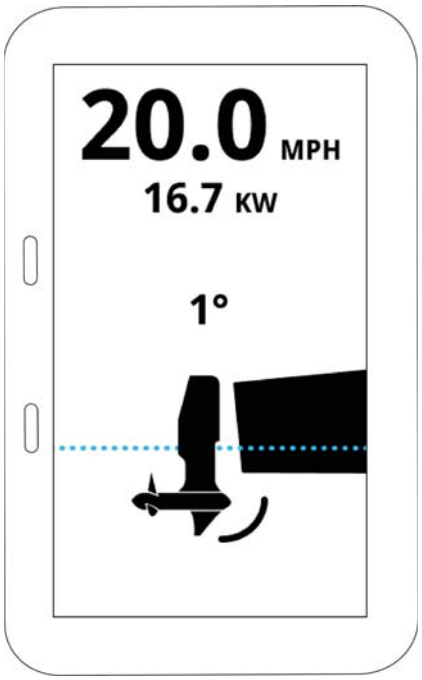

Figure 4.8 – Tilt/Trim Position on the Throttle Display

Figure 4.8 shows the Outboard trimmed one degree (clockwise on the diagram) from perpendicular. The full range of tilt/trim motion for the Outboard is -2.7° to 67.1°.

NOTICE

The tilt/trim is not meant to be operated continuously for longer than 45 seconds. Safety features are incorporated that will cause the tilt/trim to temporarily stop operating after 45 seconds to prevent it from being damaged. After waiting 10 seconds, the tilt/trim operation can resume.

4.2.6 Tilt Lock

Engage the tilt lock to lock the Outboard in the tilted up position during storage and transport. Using the lock reduces the pressure on the hydraulic tilt/trim assembly.

NOTICE

When trailering, be sure to use a transom saver to support the Outboard (see Section 8 for trailering instructions). Do not rely on the tilt/trim or the tilt lock alone to keep the Outboard up while trailering. They are **not** intended to support the Outboard while trailering.

To engage the tilt lock:

1. Raise the Outboard to the fully tilted up position.
2. Flip the tilt lock into the locked position.

Figure 4.9 – Tilt Lock in the Ready-to-Lock Position

3. Lower the Outboard for approximately 4 seconds until it rests on the tilt lock.

Figure 4.10 – Tilt Lock Engaged

4.2.7 Manual Tilt/Trim Release

If the power tilt/trim ceases to respond to input from the tilt/trim button on the Throttle, there is a manual release valve on the bottom of the tilt/trim unit that can be used to release the pressure in the tilt/trim unit and allow for manual adjustment of the Outboard position.

1. To release the valve, first power Off the system and disconnect the Cable from the Outboard by raising the Cable up out of the black rubber clamp and, holding the Cable connector end, pushing in the connector's disengagement tab, and firmly pulling the Cable straight out of the Outboard.

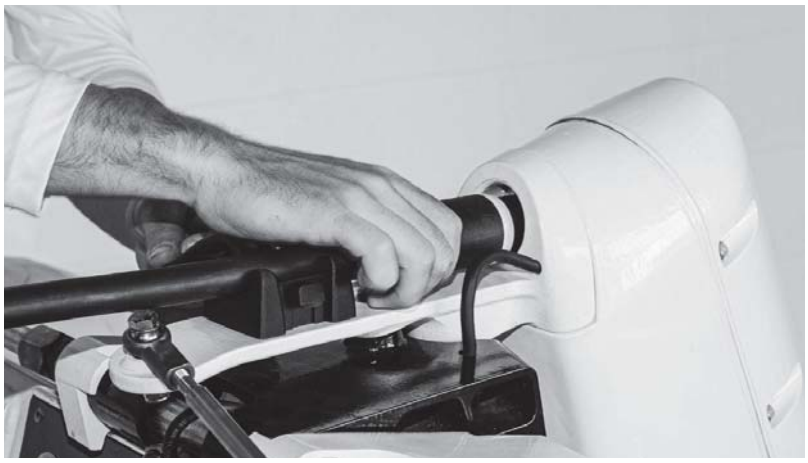

Figure 4.11 – Removing the Cable from the Outboard

2. Use a flat head screwdriver to loosen the fastener on the bottom side of the tilt/trim by turning the screw counter-clockwise. Unscrew until it comes to a stop. The fastener will not come all the way out.

Figure 4.12– Loosening the Release Valve Fastener

⚠ WARNING

If the Outboard is tilted up when the release valve fastener is loosened, the Outboard will tilt downward under its own weight. Keep clear of the Outboard to avoid injury due to pinching in the mechanism or being struck by the Outboard.

3. To raise the Outboard, lift by pulling up on the end of the anti-ventilation plate.

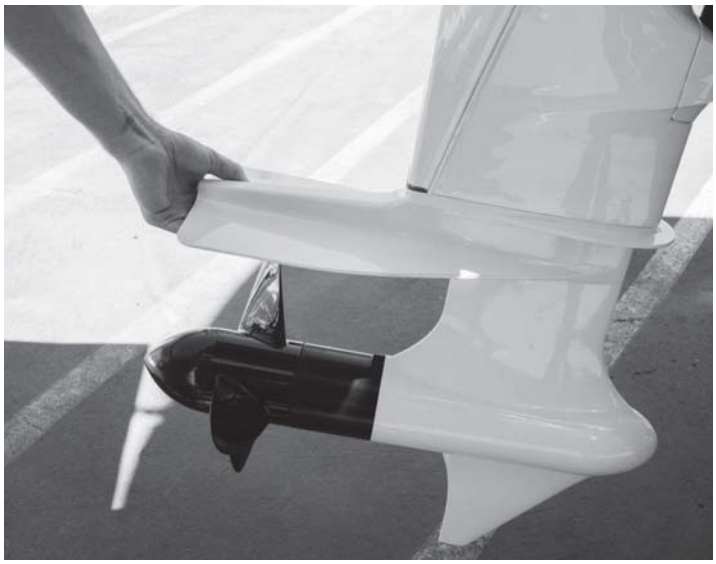

Figure 4.13 – Lifting the Outboard via the Anti-Ventilation Plate

4. Use the tilt lock (see Section 4.2.6) to hold the Outboard in the tilted-up position for storage or trailering.

⚠ WARNING

Lifting the Outboard manually presents the risk of injury while holding the Outboard and simultaneously engaging the tilt lock. It is recommended to do this with two people.

5. Use a flat head screwdriver to re-tighten the fastener on the bottom side of the tilt/trim until snug by turning the screw clockwise. The Outboard will remain in position when the fastener is tightened.

4.2.8 Steering Lock

The Outboard includes a steering lock to prevent the Outboard from moving from side to side during trailering or storage.

⚠ WARNING

Be sure to fully release the steering lock before operating the boat. Failure to do so, or operating the Outboard with the steering lock only partially released, will result in the inability to steer, and may result in a collision.

Locked	Unlocked

Figure 4.14 – The Steering Lock in the Locked and Unlocked Position

- To engage the steering lock, center the boat's steering and then pull the lever in the direction towards the bow of the boat until it comes to a complete stop.
- To release the steering lock, push the lever in the direction away from the bow of the boat until it comes to a complete stop.

4.3 Battery Pack

4.3.1 Overview

The Pure Watercraft Battery Pack is a modular and portable lithium-ion power source for use within the Pure Outboard system either as an individual Battery Pack or connected with up to 10 other Battery Packs.

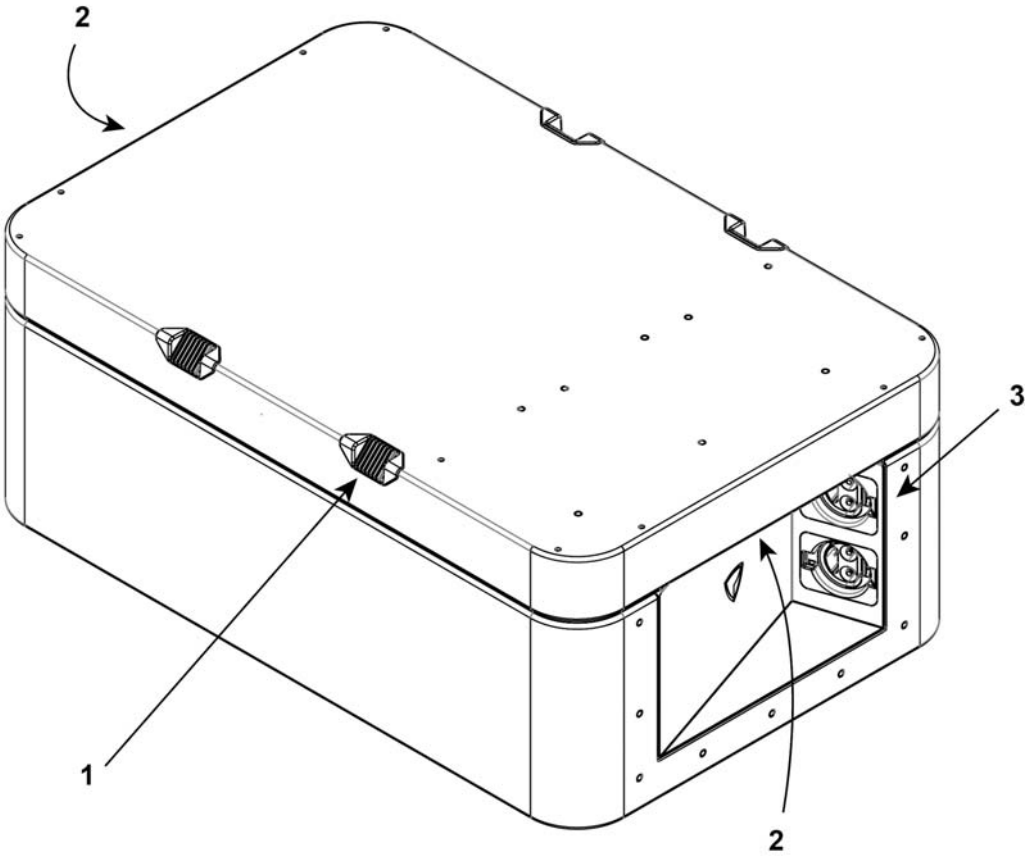

Figure 4.15 – Battery Pack Features

1. Strap guide (x4)
2. Lifting handles
3. Receptacles (x2) for Cable connection

⚠ WARNING

- Do not attempt to open or disassemble the Battery Pack.
- Do not attempt to repair the Battery Pack.
- Do not touch any visibly damaged components on the Battery Pack.

- Do not operate the system with a damaged Battery Pack. If an issue is suspected with the Battery Pack, stop using the system immediately.
- Do not attempt to charge a damaged Battery Pack.
- If a Battery Pack is visibly damaged, avoid any contact with water.
- Be sure the system is powered Off prior to connecting or disconnecting a Battery Pack.
- Do not attempt to use a Battery Pack as a power source for anything other than the Pure Outboard system.
- In the unlikely event that a fire occurs, immediately contact the local fire emergency responders.

⚠ CAUTION

- During operation, do not place a Battery Pack in a compartment with insufficient air flow. This may cause the batteries to overheat and reduce the power output of the system.
- A good rule of thumb for sufficient air flow is to have at least one inch of continuous clearance around all four sides and the top of a Battery Pack. If the Battery Pack is to be enclosed, ensure that the enclosure has sufficient venting and/or holes for air flow.
- Keep the Battery Pack away from flammable objects.

4.3.2 About the Battery Pack

The Pure Outboard Battery Pack is a proprietary design which uses small-cell lithium-ion batteries and includes active thermal management to ensure the cells remain within a temperature range that maximizes performance and lifetime.

Like all lithium-ion batteries, over time there will be a natural reduction in the amount of energy that a Battery Pack can hold as the Battery Pack ages. This will gradually result in decreased range of travel within a single charge. Lithium-ion batteries age as a result of multiple factors including time, usage cycles, discharge rate, storage temperature, operating temperature, depth of discharge, and time spent at empty or full charge. Like all lithium-ion batteries, the Battery Pack will also experience drain over time if it is left unused and not charged.

The best way to preserve the Battery Pack's available capacity is to adhere to the recommended usage and charging behavior as described in this User Guide.

The Battery Pack is waterproof rated to IP-X7, a standard established by the International Electrotechnical Commission (IEC) to classify the degree of protection from water provided by an enclosure. However for best performance over time, keep the Battery Pack dry, out of standing water and free from dirt or debris.

4.3.3 Battery Pack State of Health

State of health is a measure of the condition of the Battery Pack and its performance relative to a new Battery Pack. It takes into account the maximum energy capacity available in addition to other factors. The state of health of the Battery Pack, like all lithium-ion batteries, will gradually degrade over time as a result of use.

State of health is shown as a percentage value, with 100% representing the state of health of a fresh Battery Pack. The state of health of the Battery Pack(s) can be seen in the Mobile App.

4.3.4 Battery Pack Cumulative Energy Output

Cumulative energy output is the amount of energy that has been output by the Battery Pack throughout its lifetime, measured in kilowatt-hours (kWh). It is a way to measure system lifetime usage which accounts for the system power output, measured in kilowatts (kW), as well as hours of operation. It is similar to an odometer in a car, but appropriate for outboard motors which operate on different vessel types.

The cumulative energy output of the Battery Pack can be viewed in the Pure Watercraft Mobile App.

4.3.5 Additional Battery Pack care recommendations

When operating the system, do not let the Battery Pack discharge to 0%.

4.4 Charger

NOTICE

IMPORTANT SAFETY INSTRUCTIONS. SAVE THESE INSTRUCTIONS.
This User Guide contains important safety and operating information for the Pure Watercraft Charger. Before using the Charger, read all instructions and cautionary markings on the Charger and Battery Pack.

4.4.1 Overview

The Pure Watercraft Charger is portable and can be kept on a dock, in a garage, or on a boat, allowing for charging at different destinations. The Charger is waterproof to IP-X7, enabling it to charge outdoors safely. The Charger can be mounted on a post or wall using four fasteners. The Charger can charge one or more Battery Packs simultaneously.

The Charger can connect to single-phase 110–120V or 208–250V power (see Section 4.4.2). Battery Packs will charge more quickly when connected to 220-240V power compared to 110-120V power. If charging two or more Battery Packs, the Charger will charge twice as fast on 220–240V power compared to when connected to 110–120V power.

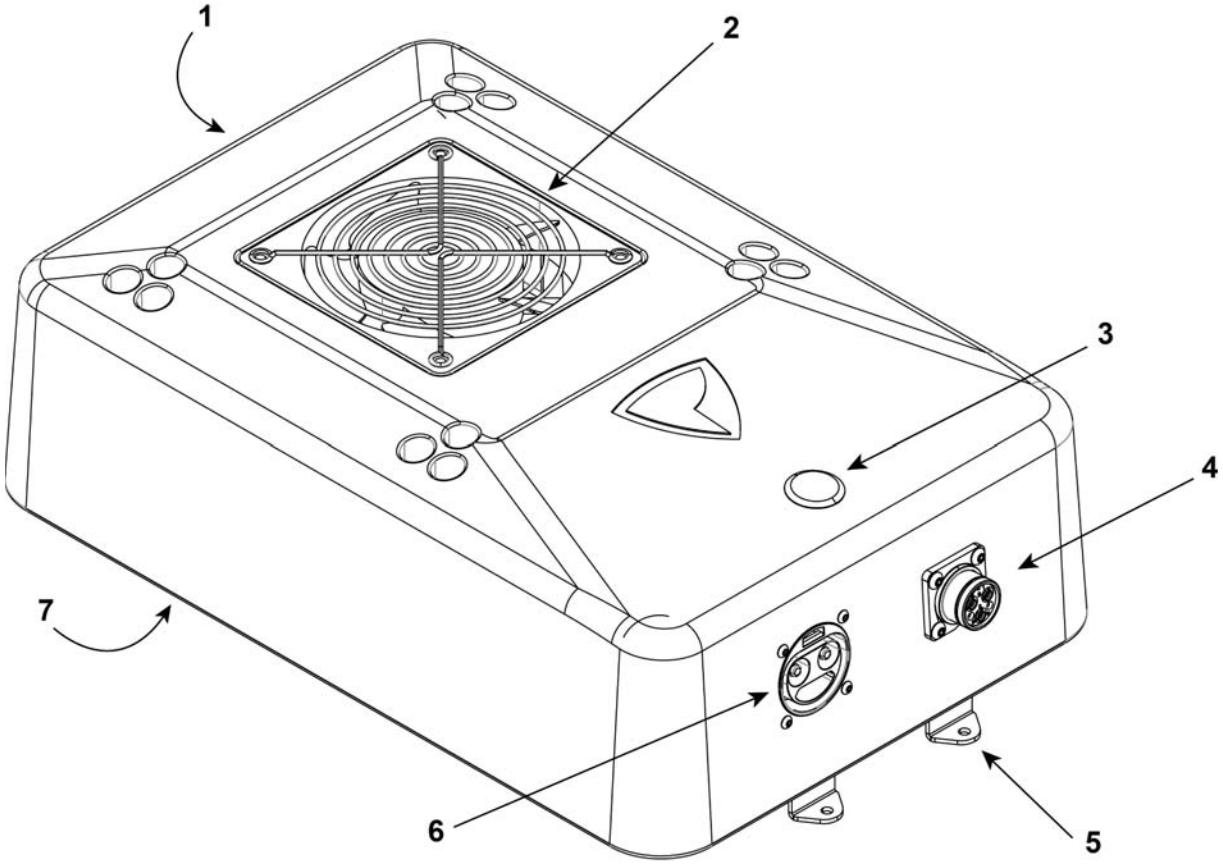

Figure 4.16 – Charger Features

1. Wall mounting hooks (see Section 10.8)
2. Air intake fan
3. Power button with integrated charging status light (see Section 4.4.3)
4. AC wall power Cable receptacle
5. Wall mounting hardware (see Section 10.8)
6. Receptacle for Cable that connects to the Pure Watercraft Battery Pack to be charged (or to the first Battery Pack if multiple Battery Packs are being charged simultaneously in series)
7. Air exit vents

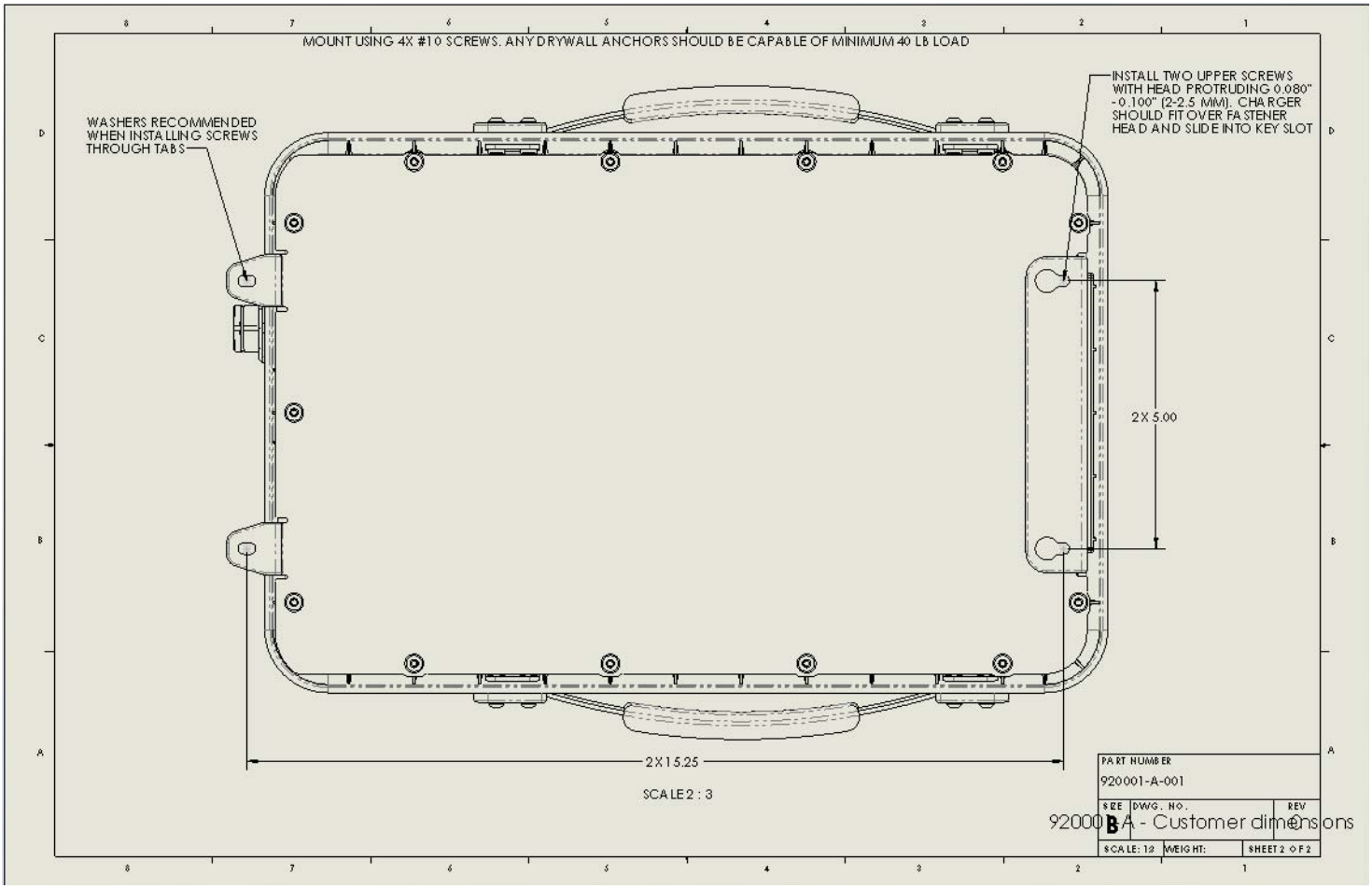

Figure 4.17 - Charger Mounting Diagram

⚠ WARNING

- Only charge Pure Watercraft Battery Packs with this Charger. Charging other batteries may cause injury and damage.
- Be sure to power Off the Charger before disconnecting any Cables.
- Do not sit or stand on the Charger.

- Do not obstruct the Charger's fan or bottom vents.
- Do not open or disassemble the Charger.

4.4.2 Compatible Power Outlets & Corresponding Cables

The Charger provides the option to connect to three types of AC power outlets (shown below) using three different Cables with corresponding plugs.

- NEMA 5-15, 110–120V 15A plug and outlet

Figure 4.18– NEMA 5–15 Plug and Outlet

- NEMA 14-50, 220–240V 50A plug and outlet (standard RV or indoor plug, non-locking)

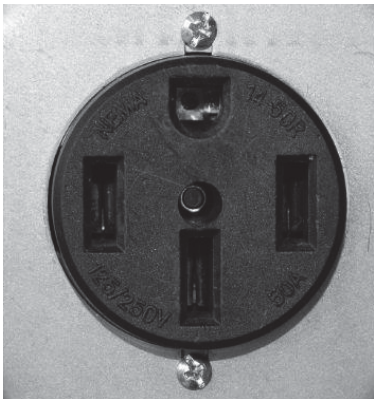

Figure 4.19 – NEMA 14-50 Plug and Outlet

- NEMA SS2-50, 125/250V 50A plug and outlet (standard marina dock plug, locking)

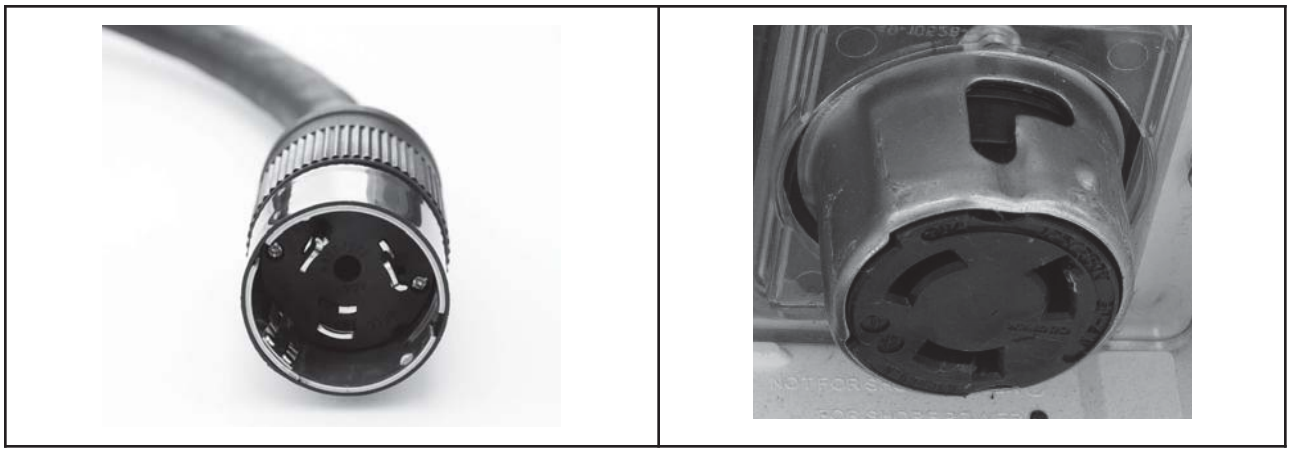

Figure 4.20 – NEMA SS2-50 Plug and Outlet

NOTICE

Do not attempt to use an off-the-shelf adapter to connect the Pure Watercraft Charging Cables to plug types other than the ones specified in this User Guide. The Charger will fail to charge.

4.4.3 Charging Status Light

The light on the Charger indicates the status of charging, and the state of charge of the connected Battery Pack(s). If more than one Battery Pack is connected to the Charger and they are at different states of charge, the light will indicate the average state of charge of the Battery Packs. To see the state of charge of the individual Battery Packs, power on the Throttle screen during charging (see Section 4.5.8) or open the Pure Watercraft Mobile App during charging (see Section 7.4).

The Charger light color indicates the following charging behavior:

Charger status	Light behavior
Charger is On (button has been pressed), but not charging (Battery Pack is not connected).	White light – solid
Charger is connected to batteries and booting up.	White light – flashing
Charger is charging and the Battery Pack is below 20% state of charge.	Orange light – flashing
Charger is charging and the Battery Pack is 20%–59% state of charge.	Yellow light – flashing
Charger is charging and the Battery Pack is 60%–79% state of charge.	Green light – flashing
Charger is charging and the Battery Pack is 80%–100% state of charge.	Blue light – flashing
Charge complete (button is pressed).	Blue light – solid
Charger error (fault state) (button is pressed).	Red light – solid
Charger is off or disconnected from wall power.	No light

4.5 Throttle

4.5.1 Overview

The Throttle is the interface between the user and the Pure Outboard system. The Throttle controls the forward and reverse movement of the vessel via movement of the Throttle handle. The Throttle includes a display screen which shows system operating information. The Throttle also includes an emergency stop mechanism which will stop the motor by pulling a magnetic fob using a lanyard. The Throttle is Bluetooth enabled to connect the Pure Outboard system to the Mobile App. The Throttle is waterproof rated to IP-X7 and designed for continuous exposure to outdoor marine environments.

The Throttle contains a battery which is automatically recharged by the Battery Pack when the system is powered on. For this reason, the Throttle battery is not intended to be accessed or changed during the Throttle's lifetime. If the Throttle does not turn on because of lack of power, contact Pure Watercraft.

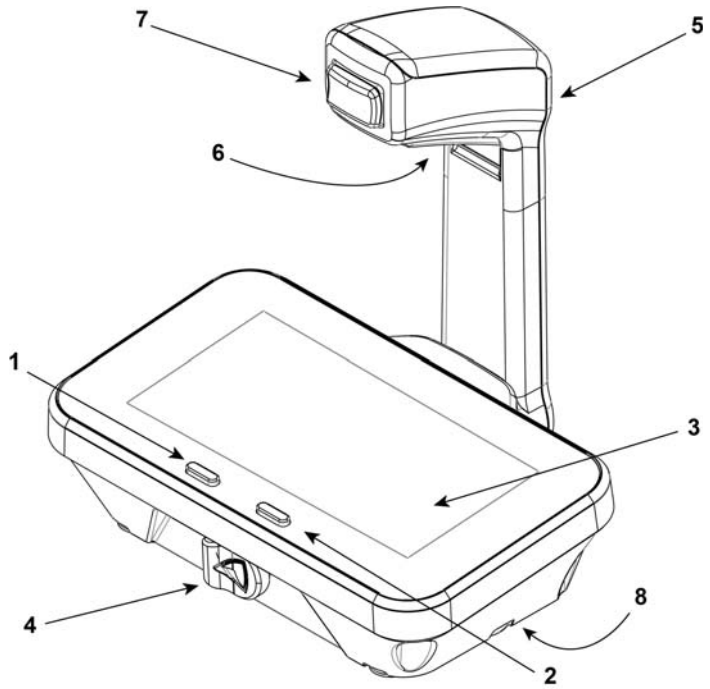

9. Emergency Stop Lanyard	10. Auxiliary Power Output Cable	11. Auxiliary Output Connector Cap

Figure 4.21 – Throttle Features

1. Power button – press to turn the system ON and OFF.
2. Next button – use to navigate to additional screens on the display.
3. Throttle display screen – shows relevant system information.
4. Emergency stop – a magnetic fob that automatically stops the Outboard when removed or displaced from the Throttle base.
5. Throttle handle – use to initiate and adjust forward and reverse spinning of the propeller.
6. Neutral lock – press and hold to release Throttle handle to allow for forward or reverse movement.
7. Tilt/trim button – actuate the upper half of the tilt/trim button to raise the Outboard, actuate the lower half to lower the Outboard.
8. Auxiliary Power Output Connector – optionally accepts the Auxiliary Power Output Cable to deliver 12 V power from the Throttle to selected other non-Pure Watercraft electronics on board the vessel. See Section 4.5.5.
9. Emergency Stop Lanyard – connects the emergency stop to the boat operator.
10. Auxiliary Power Output Cable – connect to the auxiliary power output connector to provide 12 V / 10 A auxiliary power to non-Pure Watercraft electronics onboard such as a stereo or fish finder.
11. Auxiliary Output Connector Cap – use to cover the connector for the auxiliary output Cable if the auxiliary output Cable is not being used.

4.5.2 Emergency Stop

- The emergency stop must remain connected to the boat operator at all times while the Pure Outboard system is On either by connecting to a personal floatation device being worn properly by the boat operator or by being sufficiently secured around the boat operator's wrist or leg.

Figure 4.22 – Emergency Stop Connected to the Boat Operator

- To quickly stop the motor, pull the emergency stop lanyard to disconnect the emergency stop from the Throttle.
- If the emergency stop is not attached to the Throttle, the system will not start.

4.5.3 Start-in-Gear Protection

The Pure Outboard Throttle features start-in-gear protection, which will prevent the motor from starting if the Throttle is not in Neutral (the motor will not start if the Throttle position indicates the Outboard is “in gear”).

4.5.4 Reverse Mode Power Reduction

When the Throttle is set to operate in reverse, there is an automatic power reduction for safety reasons. Reverse movement operates at one-third of the power of forward operation for each corresponding point on the Throttle handle arc of motion.

4.5.5 Auxiliary Power Output

The underside of the Throttle contains an output for 12 volts (up to 10 amps) of auxiliary power. Auxiliary power is available when the Pure Outboard system is powered On using the Throttle power button.

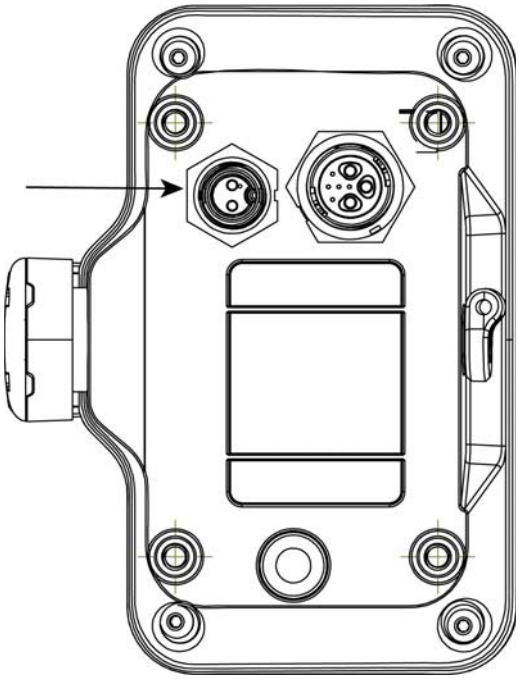

Figure 4.23 – Auxiliary Power Output Connector

This output connects to the Auxiliary Power Output Cable which can be used to power electronics onboard or charge an external 12 volt battery. The Cable has two exposed wires coming from it which are to be used to connect directly into the boat’s wiring (see Section 10.6), or the exposed wires can be used to charge an external battery on board by connecting them directly to the positive and negative terminals on the battery.

If using the auxiliary power output capabilities, connect the Auxiliary Power Output Cable to the connector on the underside of the Throttle (see Figure 4.24). Store the Auxiliary Output Connector Cap in a safe place when the Cable is connected and the Cap is not being used.

Figure 4.24 – Auxiliary Power Output Cable

If not using the auxiliary power output, connect the Auxiliary Output Connector Cap to the connector as shown in Figure 4.25 to prevent damage to the connector or penetration of foreign materials into the Throttle, and store the Auxiliary Power Output Cable in a safe place for future use.

Figure 4.25– Auxiliary Output Connector Cap on Auxiliary Output Connector When Not in Use

4.5.6 Throttle Display

The LCD display screen on the throttle is designed for outdoor use, enabling visibility in bright sunlight with minimal glare. It is waterproof and UV resistant.

The Throttle display consists of three screens: the Start Screen, the Main Screen, and the Secondary Screen.

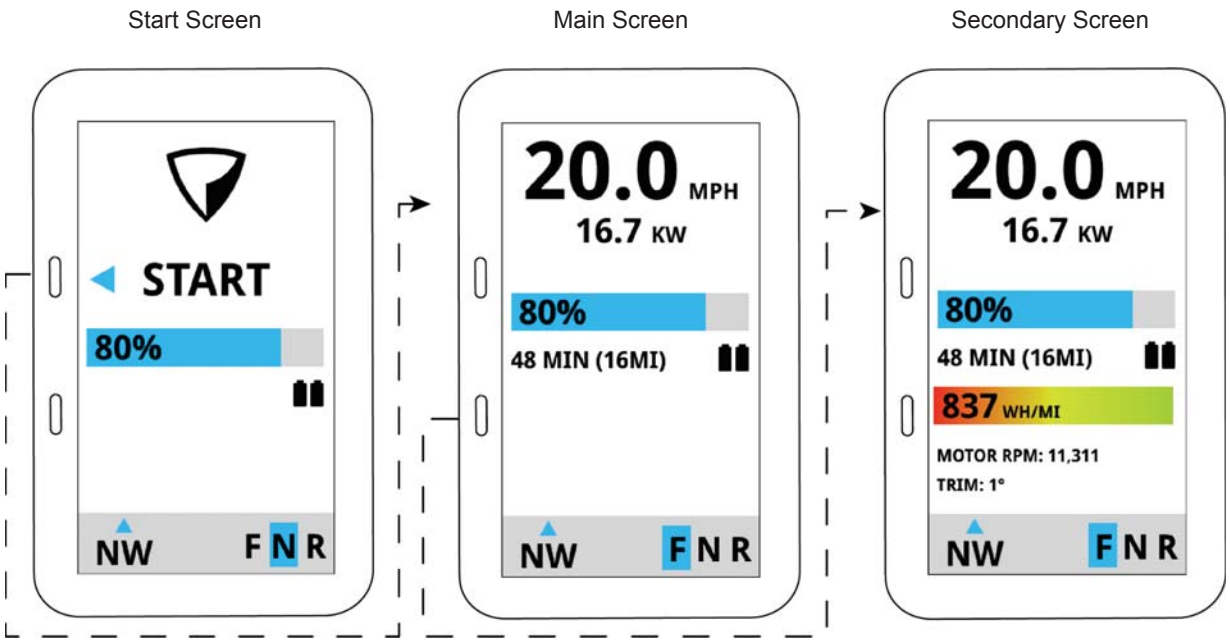

Figure 4.26 – Throttle Screen Map

Start Screen

This screen appears after pressing the Power button on the Throttle.

1. Power/Start button – push a second time when ready to go boating, will bring up the Main Screen.
2. Number of batteries connected.
3. State of charge – the percentage of full charge capacity of the connected Battery Pack(s). If multiple Battery Packs are connected, the percentage is an average measure.
4. Heading – the direction that the bow of the boat is pointed. When the Pure Outboard system is not installed on a boat, the heading reading represents the direction the front end of the Throttle is pointed.
5. Throttle position – indicates if the current position of the throttle is in Forward, Neutral, or Reverse.
6. Warnings band – area where Pure Outboard system warnings are displayed (see Section 4.5.7)
7. Next Screen button – push this button to toggle between screens.

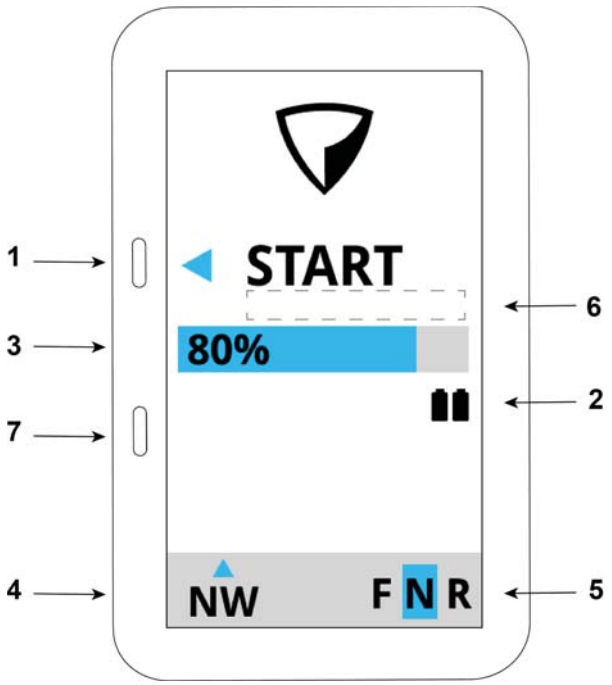

Figure 4.27 – Start Screen

Main Screen – Neutral

The Main Screen appears after pressing the Power/Start button a second time. This screen indicates that the system is in Boat Mode and is ready to begin boating operation.

1. Speed of travel – the default units will be miles per hour. This can be updated to show kilometers per hour or nautical miles per hour via the Settings section of the Mobile App (see Section 7.7).
2. Power button – push this button when ready to stop boating operation and exit Boat Mode.
3. State of charge – the percentage of full charge capacity of the connected Battery Pack(s). If multiple Battery Packs are connected, the percentage is an average cumulative measure.
4. Next Screen button – push this button to

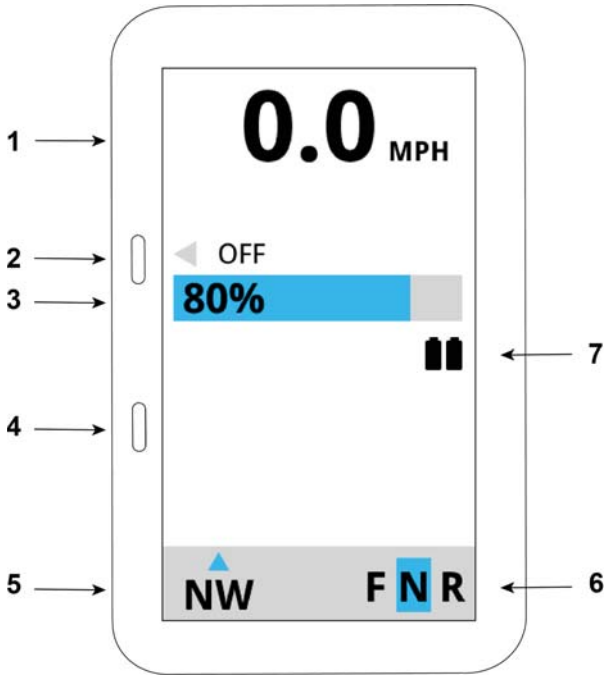

Figure 4.28 – Main Screen, Neutral

toggle between screens.
5. Heading – the direction that the bow of the boat is pointed. When the Pure Outboard system is not installed on a boat, the heading reading represents the direction the front end of the Throttle is pointed.
6. Throttle position – indicates if the current position of the throttle is in Forward, Neutral, or Reverse.
7. Number of batteries connected.

Main Screen – Forward or Reverse

When operating the vessel in forward or reverse, the Main Screen will show the following information:

1. Speed of travel – the default units will be miles per hour. This can be updated to show kilometers per hour or nautical miles per hour via the Settings section of the Mobile App (see Section 7.7).
2. Power consumption – the amount of power consumed by the system at the current throttle position, measured in kilowatts.
3. State of Charge – the percentage of full charge capacity of the connected Battery Pack(s). If multiple Battery Packs are connected, the percentage is an average cumulative measure.
4. Time and distance remaining – this value is an estimate of the remaining time and distance (default setting is miles) that can be traveled before running out of Battery power, based on the current power level and speed at which the boat is operating. As the operating power increases, the remaining range will decrease. (See Section 5.3 for more details on efficiency).
5. Next Screen button – push this button to toggle between screens.
6. Heading – the direction that the bow of the boat is pointed. When the Pure Outboard system is not installed on a boat, the heading reading represents the direction the front end of the Throttle is pointed.
7. Throttle position – indicates if the current position of the throttle is in Forward, Neutral, or Reverse.

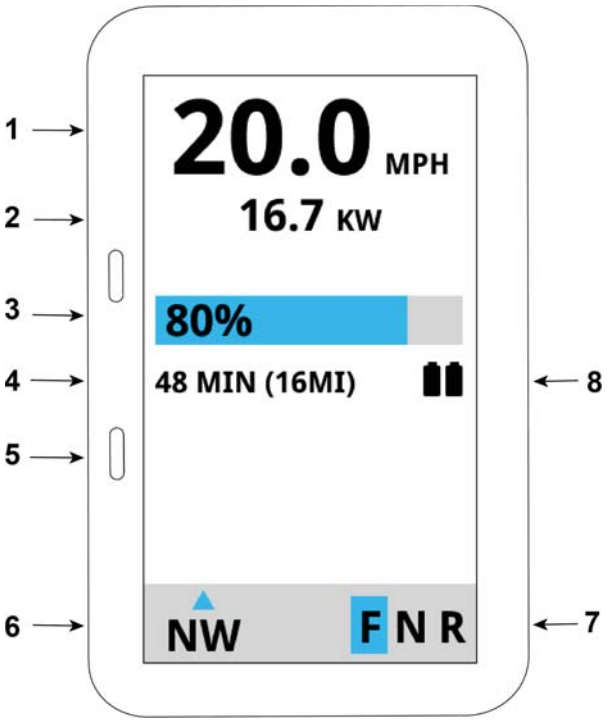

Figure 4.29 – Main Screen, Forward/Reverse

8. Number of batteries connected.

NOTICE

Please note that GPS-based range calculation is an estimate which does not consider either water current or wind conditions. Changes in speed, direction, wind, and currents may have an unaccounted impact on the remaining range value displayed.

Secondary Main Screen

The Secondary Main Screen is accessed from the Main Screen by pressing the Next button. The Secondary Main Screen shows more operating details than visible on the Main Screen.

To return to the previous screen (Main Screen), press the Next button again.

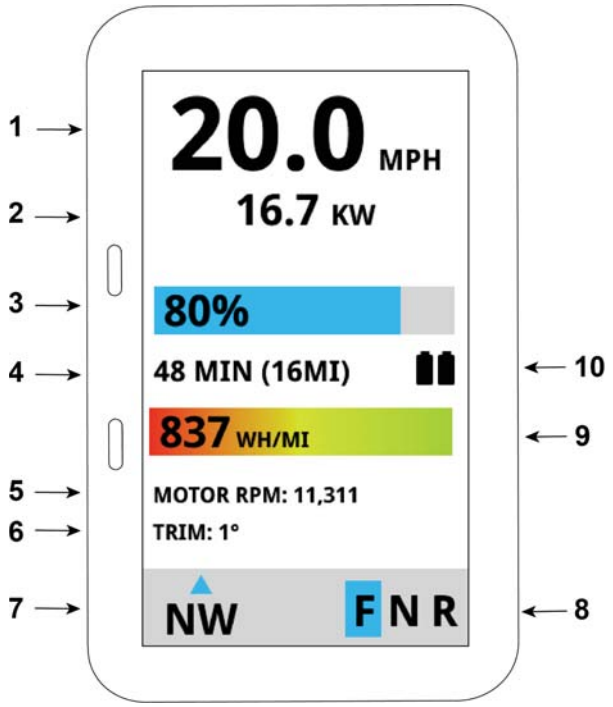

Figure 4.30 – Secondary Main Screen

1. Speed of travel – the default units will be miles per hour. This can be updated to show kilometers per hour or nautical miles per hour via the Settings section of the Mobile App (see Section 7.7).
2. Power consumption – the amount of power consumed by the system at the current throttle position, measured in kilowatts.
3. State of Charge – the percentage of full charge capacity of the connected Battery Pack(s). If multiple Battery Packs are connected, the percentage is an average cumulative measure.
4. Time and distance remaining – this value is an estimate of the remaining time and distance (default setting is miles) that can be traveled before running out of Battery power, based on the current power level and speed at which the boat is operating. As the operating power increases, the remaining range will decrease. (See section 5.3).
5. Motor RPM – Speed at which the electric motor is rotating. There is a gearbox between the motor and propeller so the propeller speed is slower than the motor speed shown in this display.
6. Outboard tilt/trim angle – the current trim angle of the motor, relative to vertical.
7. Heading – the direction that the bow of the

boat is pointed. When the Pure Outboard system is not installed on a boat, the heading reading represents the direction the front end of the Throttle is pointed.

8. Throttle position – indicates if the current position of the throttle is in Forward, Neutral, or Reverse.
9. Efficiency gauge – shows the watt-hours per mile (Wh/mi) consumed at the current throttle position. The lower the Wh/mi value, the more efficiently the system is operating. (See Section 5.3)
10. Number of batteries connected.

System Info Screen

The System Info Screen is accessed from the Secondary Main Screen by pressing the Next button. The System Info Screen shows information about the connected System components.

To return to the Main Screen, press the Next button again.

1. Max Outboard power – shows the maximum power (in kW) that the Outboard can output. The Outboard is designed to output up to 25kW. However, if the Outboard is to be installed on a vessel with a maximum power limit that is less than 25kW, Pure Watercraft will limit the maximum power level of the Outboard's software at the factory. For more information, contact Pure Watercraft.
2. Outboard and Battery Pack serial numbers.
3. Lifetime energy consumption – shows the cumulative kWh of energy throughput of each system component. (See Sections 4.2.2 and 4.3.4)

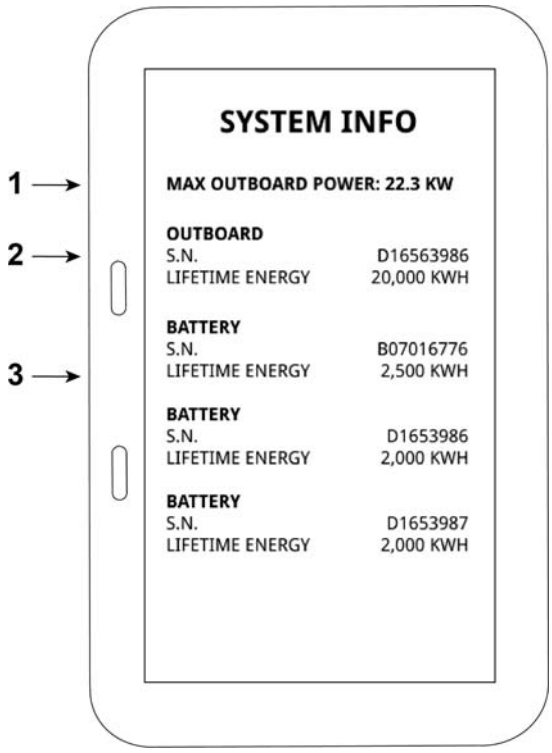

Figure 4.31– System Info Screen

4.5.7 Description of Warnings

Warnings appear on the Throttle display when the Pure Outboard system detects a potential problem. A warning will appear in the warning band of whatever screen is being displayed at the time the warning is in effect. Warnings cannot be muted or cleared by the user. Warnings will be removed automatically by the Pure Outboard system once it detects that the issue has been resolved.

Low battery state of charge

When the State of Charge of the Battery Pack(s) is below 10%, the state of charge display bar will turn yellow and the battery icon will turn yellow.

In a multi-battery system, if one Battery Pack's State of Charge is below 10%, then the battery icon corresponding to that Battery Pack will be displayed in yellow.

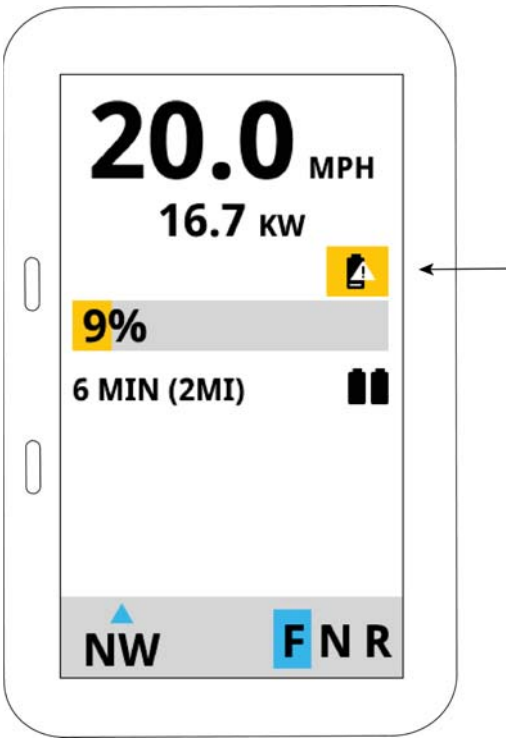

Figure 4.32 – Low Battery State of Charge

Power derating due to low battery state of charge

Depending on the power output of the Outboard at the time when the low Battery state is reached, the system may automatically reduce power output to preserve the remaining energy available and to maximize remaining boating range. This will cause the boat to slow down. Note that given the nature of powering vehicles and boats with electricity, they can generally be powered for a greater distance at slow speeds than they can at high speeds.

The large icon shown in Figure 4.33 below will appear for 5 seconds to indicate that the power is reduced as a result of a low state of charge. This icon will disappear and the icons shown in Figure 4.34 below will persist.

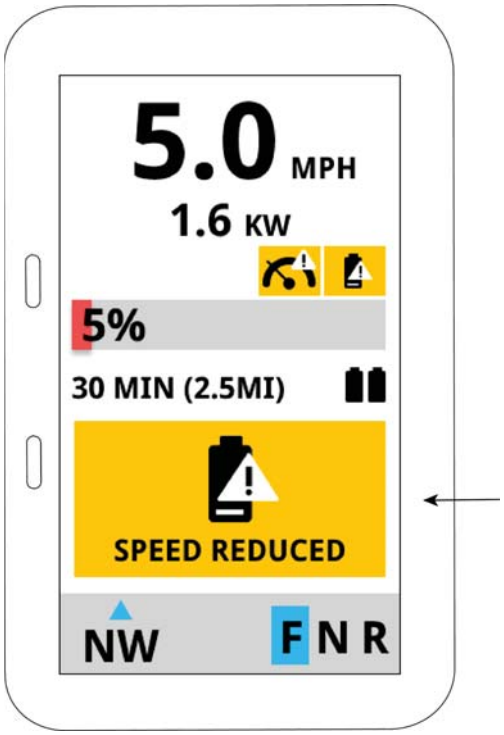

Figure 4.33 – Temporary Derating Notification

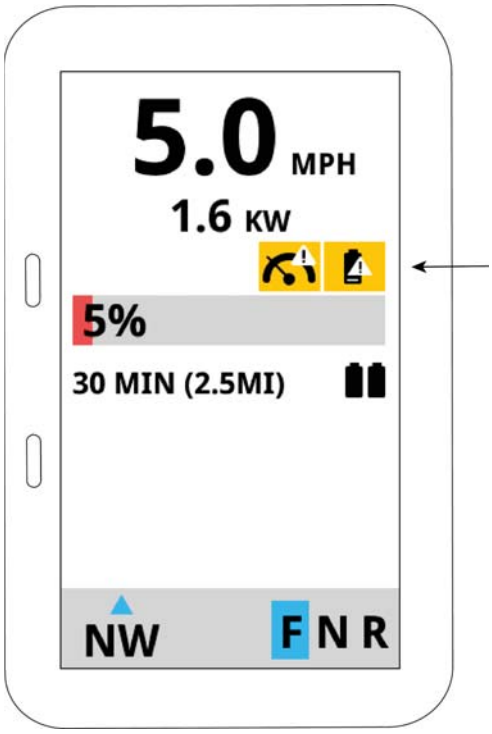

Figure 4.34 – Persisting Derating Notification

Power derating due to system over temperature

If any part of the system is deemed by the Pure Outboard's internal sensors to have become too hot for safe continued use at current power levels, the overheating warning appears. The system will automatically reduce power output in efforts to reduce the system temperature. Once the temperature of the affected component(s) is (are) reduced to acceptable levels, the warning will automatically be turned off and power restrictions will be lifted. Should the temperature of a component be high enough, all power output will cease to prevent an unsafe situation.

When the overheating warning appears, ensure there is good airflow around the Pure Outboard system (no towels or other insulating materials draped over any of the components) and try to shield the Pure Outboard system components from direct sunlight.

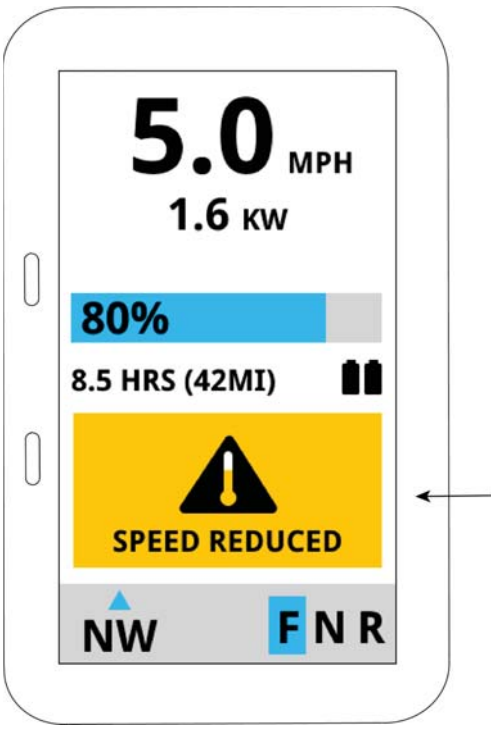

Figure 4.35 – Temporary Over Temperature Notification

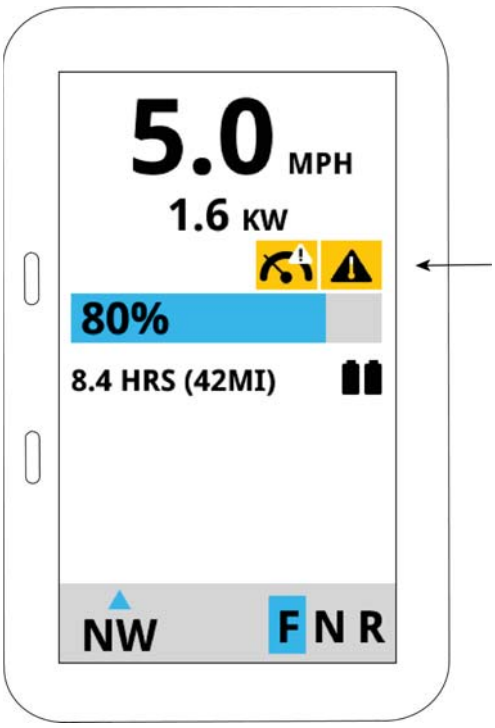

Figure 4.36 – Persisting Over Temperature Notification

System reset required

Sometimes for reasons of safety or system error, the Pure Outboard system issues a fault warning that must be reset for the system to resume operation. If this is necessary, the Reset notification will be shown on the display. Push the button as indicated on the display to reset the system. Should pushing the Reset button result in the Reset notification reappearing, shut down and restart the system by pressing and holding the Power button on the Throttle for 3 seconds, waiting for the screen to go blank, then pressing the Power button again to restart the Throttle.

System faults are logged automatically by the Pure Outboard system and are automatically reported to Pure Watercraft upon being logged via the Mobile App. If you are experiencing frequent system faults, contact Pure Watercraft.

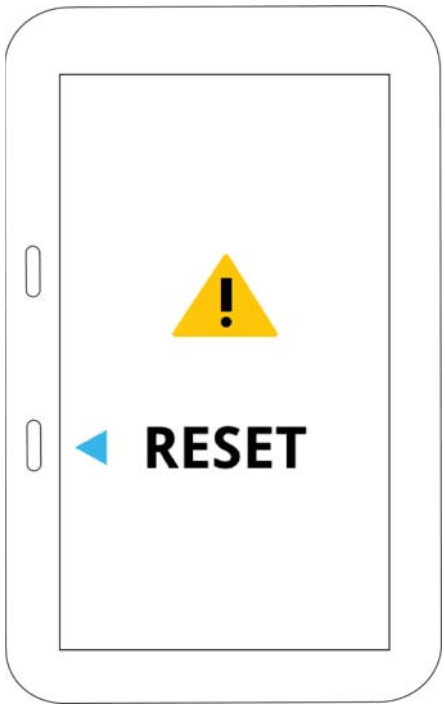

Figure 4.37- System Reset Notification

Pure Watercraft is frequently updating its software and firmware to address and minimize the need for system resets, and the best way to minimize the occurrence of system resets is to ensure the latest software and firmware updates from Pure Watercraft are uploaded from the Mobile App to the Pure Outboard system (see Section 7.9).

Cables disconnected

If one or more Cables are not properly connected, the Throttle display will show a warning to check the connections. Go to each of the Cable connections to correct any Cable plug-in connections. If all Cables appear to be properly plugged in (see Section 10.7) and the Cable Disconnected notification persists, contact Pure Watercraft. Once the Cables are detected by the system to be properly connected, the warning will disappear, and the system can be powered On.

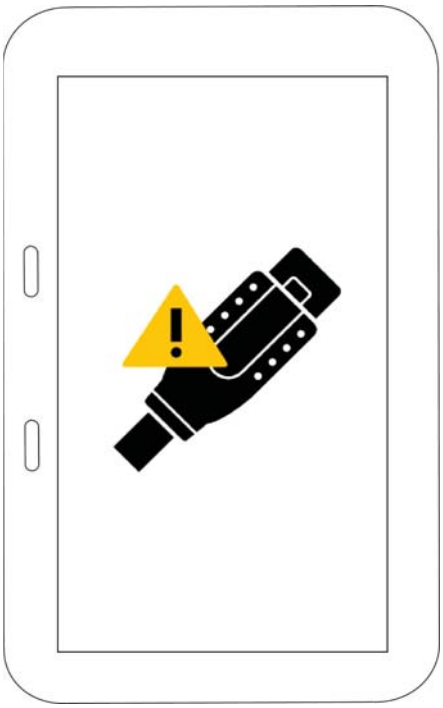

Figure 4.38 – Cable Disconnected Notification

Start-in-gear protection

If the Throttle handle is not in the neutral position when attempting to Start the system, the Throttle display shows a message indicating that the handle must return to neutral to begin boating.

Figure 4.39 – Start-in-Gear Protection Notification

Emergency stop disconnected

If the emergency stop is not connected when attempting to start the system or becomes disconnected while operating the system, the Throttle display shows a notification indicating the emergency stop must be connected.

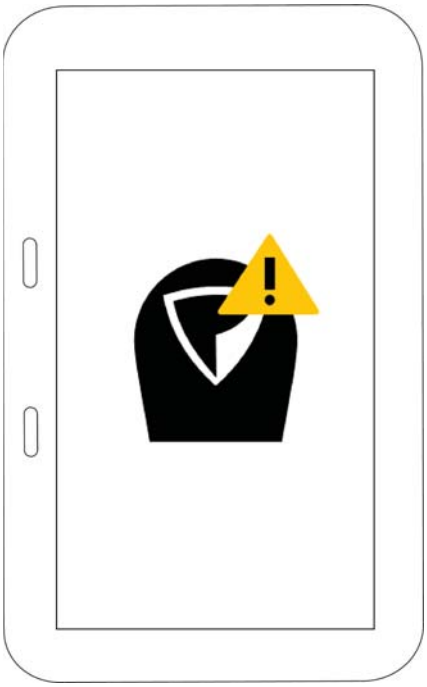

Figure 4.40 – Emergency Stop Disconnected Notification

Tilt/Trim timeout

The tilt/trim timeout notification will appear if the tilt/trim temporarily stops after 45 seconds of continuous actuation, to prevent it from being damaged. After 10 seconds, the notification will disappear and tilt/trim operation can resume.

Figure 4.41 – Tilt/Trim Timeout Notification

4.5.8 Throttle Display During Charging

When the Pure Outboard system is charging and the Throttle is connected to the system, pushing the Power button on the throttle will illuminate the Throttle display and show the charging status of the connected Battery Packs. It will show the current state of charge of each Battery Pack, as well as the estimated time remaining until charging is complete. Each Battery Pack is identified by its serial number (SN) which can be found on the label on the side of the Battery Pack.

The screen will show up to four Battery Packs. If more than four Battery Packs are connected, press the Next Screen button to see the remaining Battery Packs on the subsequent screens.

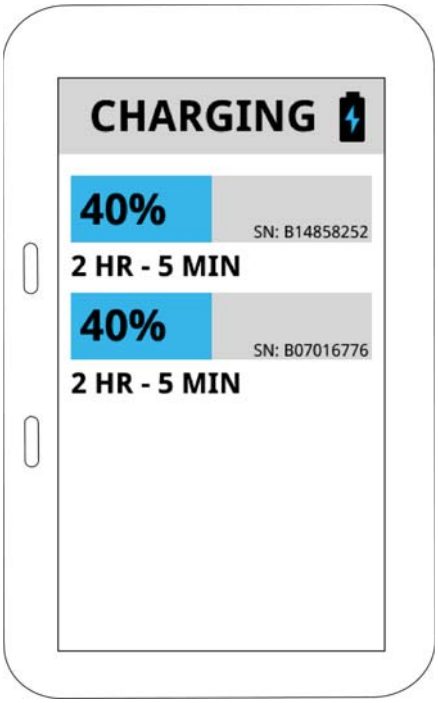

Figure 4.42 – Throttle Display when Charging

If the temperature of a Battery Pack is too high to safely charge, the Throttle display will show a warning icon. Move the Battery Pack to a cooler location or out of direct sunlight to reduce the Battery Pack temperature and resume charging.

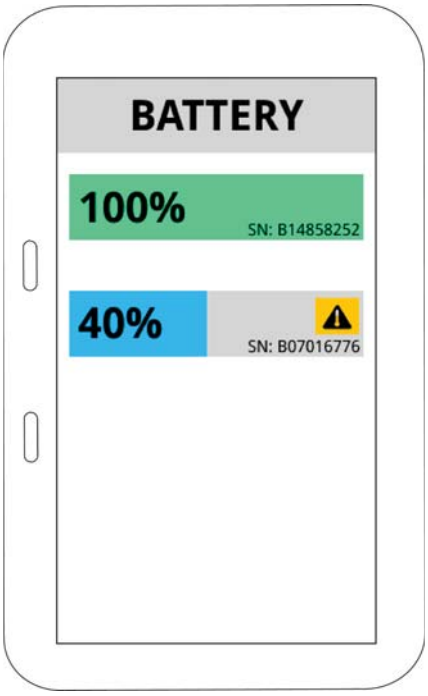

Figure 4.43 – Error Notification when Charging

4.6 Cables

This section outlines the Cables necessary to connect the Pure Outboard system. Section 10 explains how to configure the Pure Outboard system and connect the Cables properly.

⚠ WARNING

- Only use the Cables provided by Pure Watercraft for connecting Pure Outboard system components.
- Do not use the Cables provided by Pure Watercraft for any purpose other than to connect components of the Pure Outboard system as instructed in this User Guide.
- Do not disconnect the Cables from the Outboard, Battery Pack, Throttle, or Charger if the system is powered On.
- Do not disconnect the Cables from the Outboard, Battery Pack, Throttle, or Charger if the system is charging.
- Do not operate the system if the Cables show any visible damage.

4.6.1 Pure Watercraft-Supplied Cables

Power Data Cable (available in 1-meter, 3-meter, and 5-meter lengths) This cable is connected between the Outboard and Battery Pack, and between all Battery Packs. It carries high voltage and communication and control signals.	 *Figure 4.44 - Power Data Cable*
Throttle Cable (available in 10-meter length) This cable is connected between one of the Battery Packs and the Throttle. It carries communication and control signals, but no high voltage.	 *Figure 4.45 - Throttle Cable*

Auxiliary Power Output Cable	See Section 4.5.1
Charger AC Power Cables	See Section 4.4.2

4.6.2 Cables Not Supplied by Pure Watercraft

- Steering cable – to connect the Pure Outboard system to a vessel's steering. The Outboard is designed to the standards established by the American Boating and Yacht Council for outboard-mounted steering systems.
- Extension cords – to extend range between the end of the Charger AC Power Cable and the AC power outlet.

5 OUTBOARD OPERATION

Operation of a boat powered by the Pure Outboard should always be done on a body of water that is authorized for power boating. Even though some pictures shown in this section are of the boat on dry land, the steps contained in this Operation section are intended to be performed while the boat is in the water.

5.1 Before Startup

1. Confirm that the steering lock on the Outboard motor is unlocked (see Section 4.2.8).

⚠ CAUTION

Failure to disengage the steering lock before operation will render the steering inoperable, which may result in loss of control and collision.

Figure 5.1 Steering Lock in the Unlocked Position

2. Confirm that the tilt lock is unlocked (see Section 4.2.6).

Figure 5.2 Tilt Lock in the Locked Position

3. Check the Outboard, propeller, Throttle, Battery Pack, and Cables for any visible damage.

⚠ WARNING

In case of visible damage, do not power on the system and do not attempt to charge the Battery Pack.

4. Check that all Cables are securely connected to the Battery Pack and Outboard.
5. Confirm function of emergency stop and lanyard by powering on the Throttle, disconnecting the emergency stop magnetic fob, and observing the appropriate message being shown on the throttle display.
6. Confirm the steering system functions correctly and the motor turns in response to steering input.
7. Fix the emergency stop lanyard to the operator's wrist, leg, or personal floatation device (while being worn).
8. Confirm that the motor is tilted down so the propeller is in the water before starting the system.

5.2 Starting the System

1. Check that the Throttle handle is in the neutral position (see Section 4.5).
2. Check that the emergency stop is connected to the Throttle.

3. Check that the emergency stop lanyard is connected to the operator's wrist, leg or personal floatation device (while being worn).
4. To turn on the system, push the Power button on the Throttle.
5. The Throttle display screen will illuminate.
6. If any system components are not ready for operation, a message will display on the screen (see Section 4.5.7). Resolve any such warnings before proceeding.
7. Confirm on the Throttle display screen that the Battery Pack(s) has (have) been charged sufficiently for the planned boat outing prior to system operation.
8. Confirm that the motor is trimmed down enough that the propeller is submerged in the water.

⚠ WARNING

Ensure that the propeller is submerged in the water before operating the Outboard. The motor relies on the surrounding water for cooling and lubrication. Operating the motor out of the water could cause the motor to overheat.

9. When ready to start boat propulsion, push the Power button a second time as indicated on the display.

⚠ WARNING

Do not disconnect any components after starting the system. High voltage is present at this time.

⚠ CAUTION

Be aware that there is no motor noise when the Pure Outboard system is On and in the neutral position.The boat operator must be extra vigilant with a Pure Outboard system to ensure that passengers and bystanders are away from the motor at all times because the auditory cues of a traditional, noisy internal combustion engine are not present.

10. To drive forward or backward, use your fingers to pull up the neutral locking mechanism on the Throttle to disengage the neutral setting to enable movement of the Throttle forward to move the vessel forward or backward to move in reverse.
11. To stop movement, return the Throttle to the neutral position. The neutral locking mechanism on the Throttle will click and the motor will stop.

NOTICE

- If starting the system in temperatures below 32ºF (0ºC), the system will not start for a few minutes while the Battery Pack heats to an acceptable operating temperature. The Throttle screen will show a message indicating the reason for the delayed start.
- Power is limited when in reverse to prevent accidental or excessive power when reversing, which could be dangerous and cause certain boat hulls to be swamped.

5.3 Maximizing Efficiency

The Throttle display screen shows the Watt-hour per mile (Wh/mile) consumption of the Pure Outboard system. The lower the Wh/mile value, the more efficiently the system is operating.

For planing hulls

Planing hulls, which rise and travel level with the water when sufficient power is applied, operate most efficiently in two speed bands: below displacement speed and above minimum planing speed.

- Displacement speed is calculated based on the boat's waterline length, and is a speed in nautical miles per hour (knots) equal to 1.34 multiplied by the square root of the boat's waterline length in feet. For a planing hull powered by the Pure Outboard, this is typically between 4.3-6 knots (5-7 miles per hour) depending on the length of the boat. When displacement speed is exceeded, the boat will appear to be climbing up the back of its bow wave.
- Minimum planing speed: the minimum speed of travel at which the boat is on plane.

The speeds in between displacement speed and minimum planing speed are very inefficient for travel and should be avoided or minimized in order to preserve and optimize battery power.

For displacement hulls

For displacement hulls, which move through the water by pushing the water aside and are designed to cut through the water with very little propulsion, low speeds are more efficient than higher speeds, as the motor is operating at a lower power level.

5.4 Power Derating

Derating is a safety feature that prevents the system from operating at full power when the Battery Pack(s) is (are) in a restricted or low state of charge, or are in an otherwise compromised state which could cause damage to the system.

Single Battery Pack versus multiple Battery Pack configuration

The system's maximum power when connected to only one Battery Pack is restricted to 20 kW. When two or more Battery Packs are connected, then the full 25 kW is made available, subject to the other derating conditions outlined in this section.

Derating due to low battery state of charge

The system will limit the power that is available to the motor when the Battery Pack reaches approximately 20% state of charge. The top speed at which the boat can travel will be limited as a result. This power derating is done to ensure the system retains enough energy to allow greater range of travel at a lower speed in order to provide an operator with enough reserve power to return safely to shore and to prevent an operator from being stranded away from a safe mooring without power. When such derating occurs, the Throttle display will show a notification to indicate that the power is reduced (1) and that low state of charge is the cause of the power derating (2). Full power operation will be possible when the Battery Pack's state of charge is returned to approximately 20% or higher.

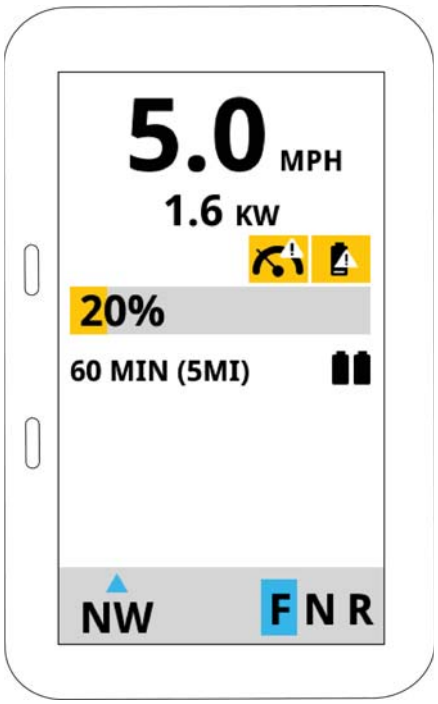

Figure 5.3 – Low Battery Derating Notification

Derating due to system over temperature

The system will limit the power that is available to the motor when the Outboard or the Battery Packs are too hot. This may occur as a result of the surrounding air or water temperature, or as a result of a component failure. When this occurs, the Throttle display will show a notification to indicate that the speed is reduced (1) and that temperature is the cause of the power derating (2).

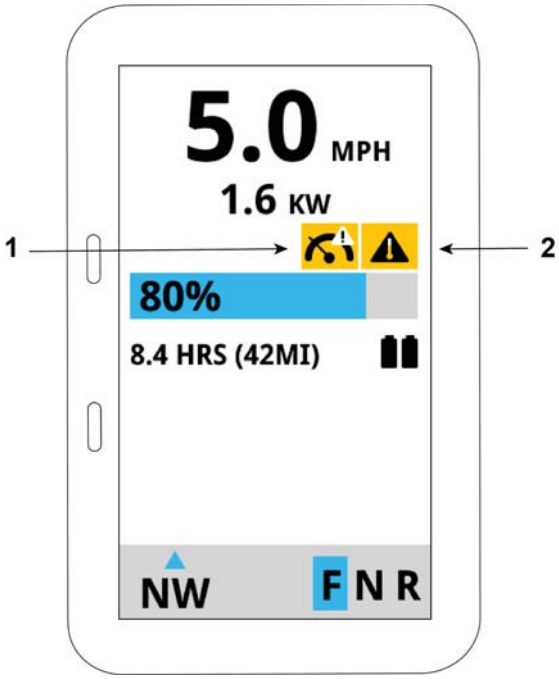

Figure 5.4 – Over Temperature Derating Notification

Full power operation will be possible when the system temperatures return to an acceptable level. The fastest way to reduce system temperatures is to pause operation of the system. Confirm that the Outboard motor is tilted down and propeller is in the water, that the Battery Pack(s) has (have) sufficient airflow around them, and that the Battery Pack(s) is (are) not in direct sunlight.

NOTICE

Operating the system at high ambient temperatures will likely result in derating when attempting high power operation.

5.5 Powering Off the System

To turn off the system, put the Throttle handle in neutral and press and hold the Power button on the Throttle for 3 seconds. The Throttle display screen will turn off to indicate the system is powered off. At this point, the emergency stop lanyard can be disconnected from the operator's wrist, leg or personal floatation device.

Motor operation can be stopped at any time by pulling the Emergency Stop Lanyard or returning the Throttle handle to the neutral position.

6 CHARGING

The Battery Packs can be charged while on the boat, and can also be charged when removed from the boat in cases where charging at the boat is not feasible. The Charger can rest on a flat surface during charging (such as the floor, a dock, or a boat deck) or can be wall mounted (see Section 10.8).

⚠ WARNING

- All wiring and circuit breakers need to be installed by a qualified electrician and in accordance with local building codes to prevent power overload conditions or accidental sparking and/or fire.
- Only use the Pure Watercraft Charger and Cables to charge the Battery Pack(s).
- Before charging, check the Charger and Cables for obvious damage, particularly on the Cable that plugs into the AC wall or shore outlet.
- The Charger may heat up and be hot to the touch during charging operation.
- Only charge a Battery Pack at ambient temperatures between +19°F and 110°F (-7°C and 43°C).
- Do not attempt to charge Battery Packs that have any visible damage.

6.1 Charging Battery Packs on the Boat

1. Ensure the system is powered off. The Throttle display should not be illuminated.
2. Connect the Power Data Cable to the Charger via the receptacle.

6.1.1 Connecting a One-Battery Pack System to the Charger

1. At the Battery Pack, unplug the Power Data Cable that is connected to the Outboard.
2. Connect the Power Data Cable from the Charger to the Battery Pack, in place of where the Outboard was previously connected.

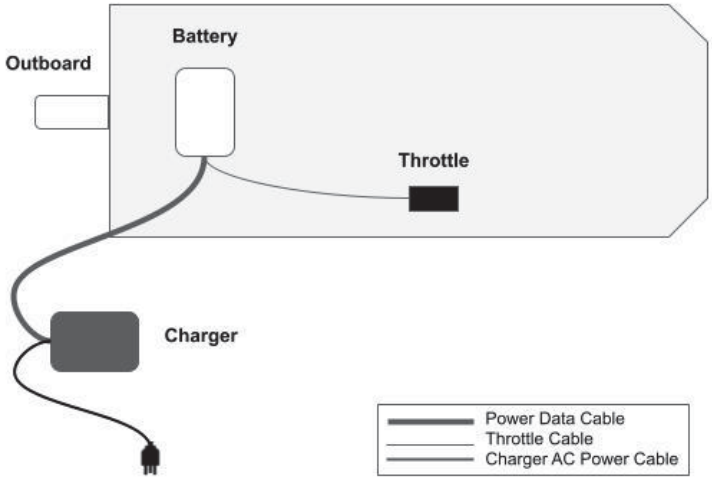

Figure 6.1 – Charging a One-Battery Pack System on a Boat

3. Ensure the Throttle Cable remains connected to the Battery Pack.

6.1.2 Connecting a System with Two or More Battery Packs to the Charger

1. Identify the Battery Pack which is connected to the Outboard.
2. On that Battery Pack, unplug the Power Data Cable that is connected to the Outboard.
3. Connect the Power Data Cable from the Charger to the Battery Pack, in place of where the Outboard was previously connected.

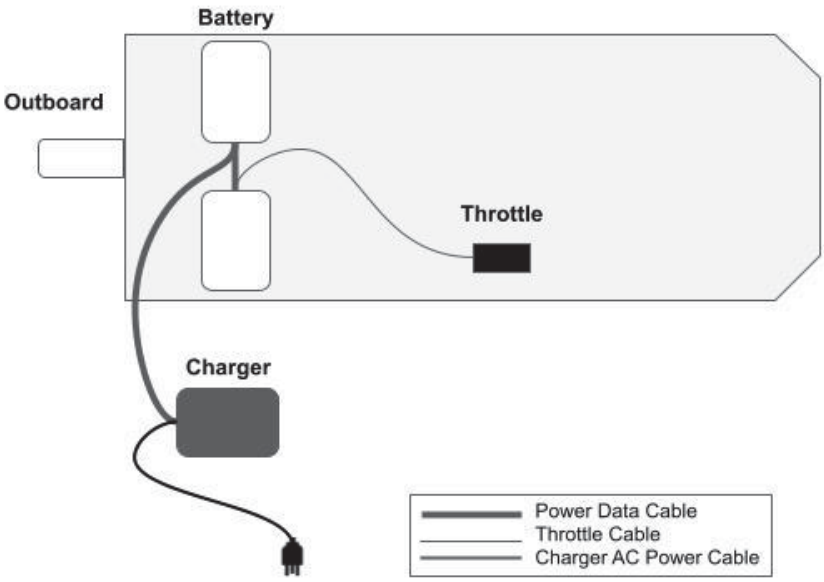

Figure 6.2 – Charging a Two-Battery Pack System on a Boat

6.1.3 Charging Operation

1. Plug the appropriate Charger AC Power Cable to the intended power outlet. The Charger is compatible with the source power outlet types listed in Section 4.4.2.
2. To begin charging, press the Power button on the Charger. The light on the Charger will illuminate and the Charger will begin charging the connected Battery Pack(s). The emergency stop must be attached to the Throttle. (see Section 4.5.2).
3. The charging status is indicated by the color of the flashing light on the Charger, described in Section 4.4.3 of this User Guide. The state of charge of the Battery Pack(s) can also be viewed on the Throttle display by pressing the Power button to illuminate the screen, as shown in Section 4.5.8. The state of charge of the Battery Pack(s) can also be seen via the Mobile App if paired and in Bluetooth range of the Throttle.
4. To stop charging, power off the Charger by pushing the Power button on the Charger. The light will turn off to indicate it is safe to disconnect the Charger. Then unplug the Battery Pack from the Charger or the Charger from the wall.
5. When the system is not in use, keep the Battery Pack(s) connected to the Charger and the Charger powered on per the charging schedule outlined in Section 6.3.

6.2 Charging Battery Packs Off of the Boat

Charging operation requires that both receptacles on the Battery Packs be properly terminated with a Pure Watercraft connector. When charging Battery Packs off of the boat, this necessitates either keeping the Throttle attached to the Battery Pack, or using a Pure Watercraft supplied Battery Pack Charging Receptacle Plug. The Battery Pack Charging Receptacle Plug is available from Pure Watercraft upon request.

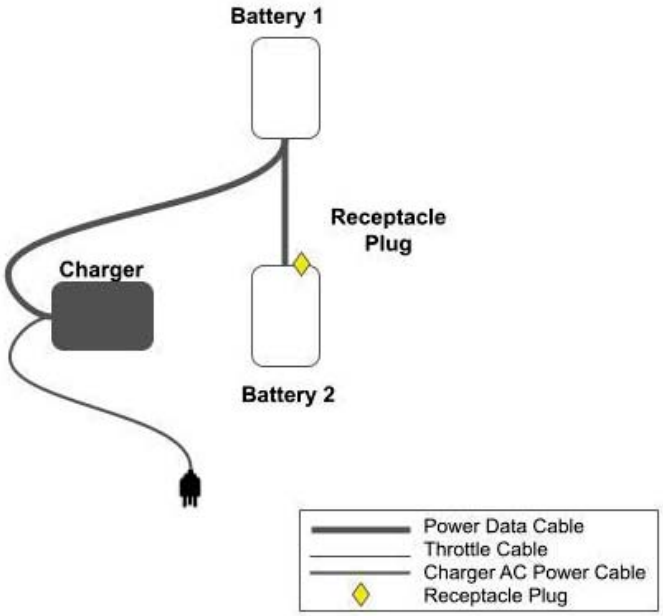

Figure 6.3 – Charging Two Battery Packs Off of the Boat, Using the Battery Pack Receptacle Terminating Plug

6.3 Charging Schedule

If operating the system at least one time per month:

Charge the Battery Pack after each use. You can leave the Battery Pack charging when not in use for up to one month continuously. Do not charge continuously for more than one month to prevent harm to the system's memory.

If not operating the system for one month or more (includes storage):

1. Charge the Battery Pack to between 60% and 80% full, as shown via the flashing light on the Charger, on the Throttle display, and in the Pure Watercraft Mobile App when it is in Bluetooth range of the system.
2. Disconnect the Battery Pack from the Charger and leave the Battery Pack disconnected.
3. The state of charge of each Battery Pack should remain between 20%-80% when in storage. Every 3 months, check the Battery Pack state of charge and verify that it is within this range. Avoid letting the Battery Pack fall below 20% state of charge whenever possible.
4. You can see the state of charge via the flashing light on the Charger (see Section 4.4.3), on the Throttle display (see Section 4.5.8), and in the Pure Watercraft Mobile App when it is in Bluetooth range of the system (see Section 7.4).
5. If the Battery Pack is below 20% full, charge it until it reaches 60%-80% full.
6. Disconnect the Battery Pack from the Charger if it will not be used within one month.

When preparing to use the system after storing a Battery Pack:

Charge the Battery Pack(s) to 100% for maximum travel range.

6.4 Charging Duration

The time it takes to charge a Battery Pack is impacted by the wall outlet which is used to charge it, as well as the number of Battery Packs that are connected to the Charger during charging. Note that all charge times listed in this User Guide are approximate and will vary due to the variance in power delivered by different outlets at different times.

Charge time (from 50% charge to full 100% charge)

Batteries per charger	110V–120V, 15A	NEMA 14-50 220–240V, 50A	SS2-50 125/250, 50A
1	~4.5 hours	~1.5 hours	~1.5 hours
2	~9 hours	~1.5 hours	~1.5 hours
3	~13.5 hours*	~2 hours	~2 hours
4	~18 hours*	~2.5 hours	~2.5 hours

*When charging on 110V–120V outlets, it is recommended to simultaneously charge a maximum of two Battery Packs per Charger in order to charge fully overnight.

The same charge times could be expected to recharge the corresponding number of Battery Packs from 20% to 70%. As a basic rule of thumb, double these expected charge times if charging the corresponding number of Battery Packs from 0% back to full 100% charge.

7 MOBILE APP

The Pure Watercraft Mobile Application (Mobile App) shows information about the Outboard system, trip history, and usage statistics. It also allows for establishing system Settings, installing updates, and contacting Pure Watercraft for assistance. The Mobile App pairs with the Pure Outboard system via a Bluetooth connection.

7.1 Mobile App Download and Account Creation

The Pure Watercraft Mobile App is available for iOS phones in the Apple App Store and for Android phones in the Google Play Store. The Mobile App does not support tablets at this time.

1. Go to the Google Play Store (Android) or Apple App Store (iOS) and search for “Pure Watercraft.”
2. When you see the following app icon, select “Get.”

Figure 7.1 – The Pure Watercraft Mobile App icon, Mobile App available for Free Download

3. Open the Mobile App on your phone.
4. Create an account using an email address and a password.
5. Verify your email address by clicking the link in the email sent to the email address provided.

At this point, the Mobile App is available to explore, including the ability to contact Pure Watercraft for support or with feedback.

7.2 Initial Pairing the Mobile App with the Outboard System

To pair the Mobile App with your Pure Outboard system follow these steps. The Mobile App account must be verified prior to pairing the Mobile App with the Outboard.

1. Power the Throttle on.
2. Open the Mobile App on your mobile phone.
3. The Mobile App will search for Pure Outboard systems within Bluetooth range. When your Pure Outboard system is found, it will appear on the Mobile App screen.
4. Tap the name of the found system, which will appear as “Pure Outboard” with the serial number listed below. It is possible to change the name of the system within the Mobile App after pairing.
5. When prompted, enter the unique Outboard Activation Code which you received via email from Pure Watercraft. If you did not receive a code or have misplaced it, contact Pure Watercraft for assistance.

7.3 Reconnecting the Mobile App with the Outboard System

Once paired, the Mobile App should reconnect to the system automatically when in Bluetooth range. However, if it does not connect automatically, follow these steps:

1. Confirm that Bluetooth is enabled on the phone.
2. Unpair the device by tapping “Unpair” within the App’s Settings.
3. Within the Bluetooth Settings of the phone, find the Pure Outboard (it may have a personalized name if the system was renamed in the App) and tap Forget Device.
4. Attempt to re-pair.

7.4 Mobile App Dashboard

The Mobile App communicates with the Pure Outboard system via Bluetooth, and shows real-time system information only when the Mobile App is within Bluetooth range of the system (approximately 20 feet). The Mobile App will display different information on the Mobile App dashboard depending on the system’s operating state and whether it is connected to the system via Bluetooth.

Only one phone at a time can connect with the Pure Outboard system. If one phone is already connected, other phones which are within Bluetooth range and have the Pure Watercraft Mobile App will display a message in the Mobile App showing that another phone is already connected to that system.

The Mobile App will display the following information depending on the system’s operating state:

Within Bluetooth range of the Pure Outboard System	
Charging 1. State of charge of the batteries. 2. Time remaining until charge is complete. 3. Number of Battery Packs connected to the Charger. 4. The blue color Bluetooth symbol shows that Bluetooth is connected.	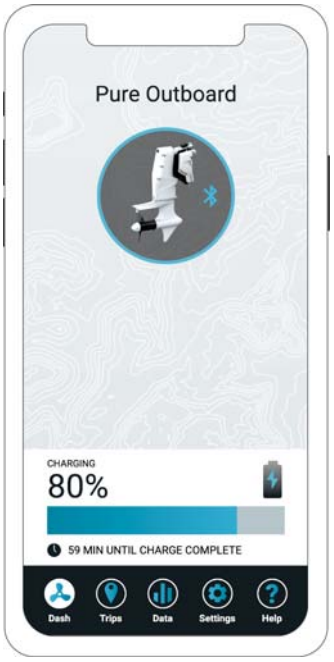

Not Charging 1. State of charge of the batteries. 2. Number of Battery Packs connected to the Charger. 3. The blue color Bluetooth symbol shows that Bluetooth is connected.	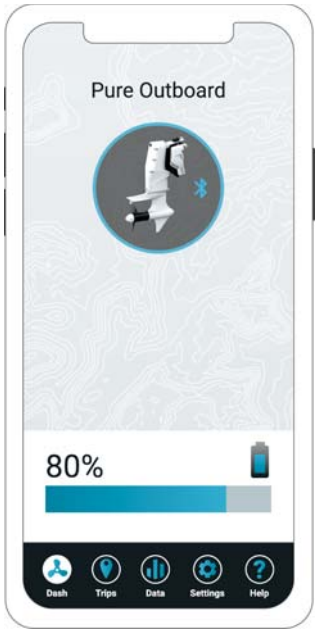
On a Trip The Mobile App can function as a secondary display when boating. 1. Speed of travel. 2. Current power consumption. 3. Heading of travel. 4. Throttle position. 5. Time remaining at current speed.	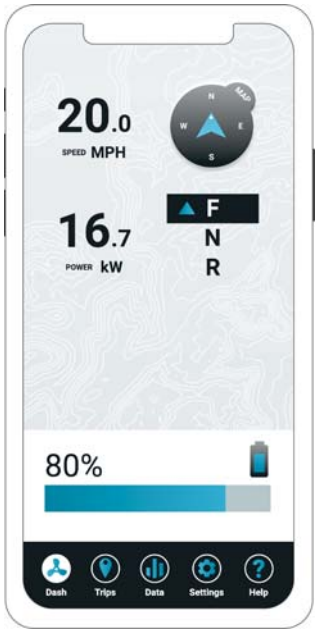

When out of Bluetooth range of the Pure Outboard System	
1. The last time the phone was connected via Bluetooth. 2. The plug icon indicates the system was connected to the Charger when it was last in range.	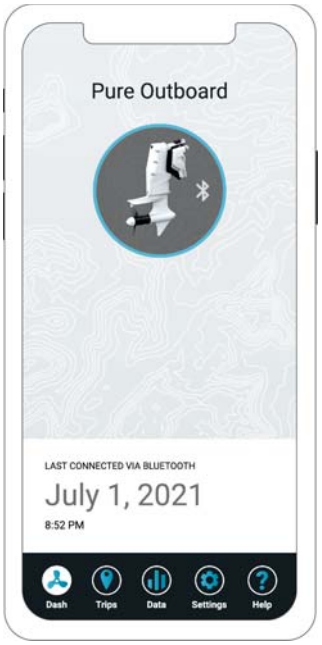

7.5 Trips & Trip Details

The Trips page shows a list of past trips taken. 1. A trip starts when the system is powered on and the Throttle is used to actuate movement of the motor. 2. A trip ends when the system is plugged into the Charger or powered off for the last time that day. 3. If there are multiple outings in one day, the system will count them all as one trip.	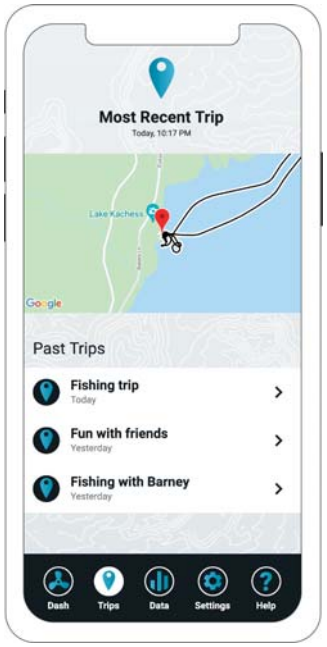

Tapping on a trip will display the trip details for that trip. 1. The route traveled, with the green icon indicating the location of the start of the trip and the red icon indicating the end of the trip. 2. The time on the water. 3. The distance traveled. 4. The top speed of the trip. 5. The average speed of the trip. 6. A graph of the speed traveled over time. 7. The starting and ending state of charge. 8. Tap on the pencil icon to customize the name of the trip.	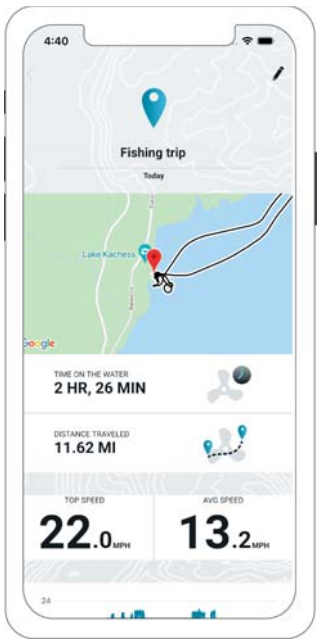

7.6 System Lifetime Data

1. Total distance traveled. 2. Average speed traveled. 3. Average trip duration. 4. Average energy consumption per trip. 5. Cumulative energy consumption of the motor and batteries.	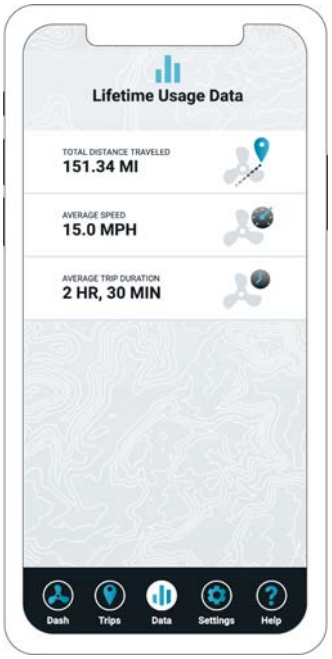

7.7 Personalize System Settings

The system settings can be modified via the Mobile App. Changes to settings in the Mobile App will be applied to the system when the phone is in Bluetooth range.

1. Distance & Speed Units: Choose to have system information displayed in the App and on the Throttle in miles, kilometers, or knots.
2. Preferred Network: Choose to have updates and data transfer from the phone to the cloud when connected to Wi-Fi and cellular networks, or only when connected to Wi-Fi.
3. Log Out: Log out of the account.
4. Personalize system name: Edit the name of your system as it will appear in the App and during pairing.
5. Unpair: Tap to unpair with a system. Note: This will require the unique pairing code for the system in order to re-pair.
6. [Future feature] Maximum System Power Level: Set a limit to the maximum power the motor will output. Contact Pure Watercraft to change this setting as it is not yet available in the Mobile App.

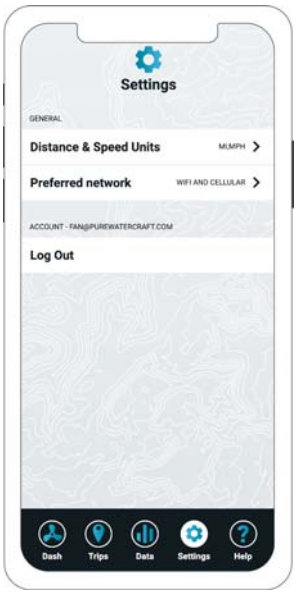

7.8 Submit Service Requests & Feedback

1. The Help page includes a link to contact Pure Watercraft for assistance. This will open a form to help us easily and quickly address the issue.
2. It also includes a link to report issues encountered with the Mobile App.

7.9 Software Updates

The Pure Outboard system receives software updates via the Pure Watercraft Mobile App on the paired mobile phone.

When an update is available, it will automatically be delivered to the Mobile App on the paired mobile phone when the phone is connected to the preferred network (cellular & Wi-Fi, or Wi-Fi only) as established in the Settings section of the Mobile App.

When the phone is within Bluetooth range of the Pure Outboard system and the Pure Outboard system is powered on, the update will automatically transfer to the system via Bluetooth. Typical updates are expected to take less than one minute to update via Bluetooth.

The update will automatically install on the system after it is transferred. The version number of the installed software can be viewed in the Mobile App under Settings.

There is an option to manually update the system. It can be found in Settings>System Updates.

7.10 Telemetry Data Transfer

To continuously improve the performance of the Pure Outboard system, as well as develop new features, Pure Watercraft logs and collects telemetry data pertaining to the system's operation and operating environment. This data is logged on the system and transferred to the Mobile App via Bluetooth when the Mobile App is in range of the system and the system is powered on. When the Mobile App is connected to its preferred network, the data will automatically upload to Pure Watercraft's cloud servers.

For more information on what data Pure Watercraft collects and how it is used, please review Pure Watercraft's User Privacy Policy, available in the Pure Watercraft App or online at www.purewatercraft.com.

8 TRAILERING

⚠ CAUTION

- Ensure that there is no risk of the Outboard coming into contact with the ground before or during the trip.
- Ensure that the steering lock and the tilt lock are both securely engaged (see Sections 4.2.6 and 4.2.8).
- Ensure that the Throttle is in the neutral position for transport so it remains locked in place and not subject to rattling or dislocation resulting from significant bumps or swerves that the trailer may encounter.
- Be sure to adhere to local regulations for trailering boats, which may include marking the Outboard with a bright flag to indicate to other motorists that the outboard may protrude from the confines of the boat and trailer.
- Never charge the Battery Packs while the system is in transit on a trailer.
- Always use a transom saver when trailering the Pure Outboard. Do not rely on the tilt lock on the transom bracket to support the motor. Failure to use a transom saver when trailering may result in damage to the Outboard and boat.

8.1 Transom Saver

Because the design of the Pure Outboard motor has a lower center of mass than gas outboard engines, it puts different types of strain on the transom when trailering. To prevent damage to the boat and the motor, always use a transom saver when trailering the Pure Outboard.

Transom saver designs vary, and choosing the appropriate type of transom saver depends on the trailer. Check the trailer and whether it has a rear roller or a transom saver tab before choosing a transom saver.

Figure 8.1 – Outboard Supported by a Transom Saver

8.2 System Security During Transport

The Pure Outboard system does not have a traditional key like some gas engines. To prevent someone from starting the system when it is parked on a trailer unattended, remove the emergency stop lanyard from the Throttle and keep it stored in a safe place away from the boat.

9 STORAGE

9.1 Storing the Batteries & Charger

⚠ WARNING

- Store the batteries in a dry and cool place.
- Do not immerse the Battery Pack in water or allow it to get and stay wet.
- Do not store the Battery Pack in direct sunlight or near sources of heat, such as a fireplace or heater.
- Do not apply direct heat to the Battery Pack or place it in contact with an open flame.

To keep the Battery Pack in the best possible condition and reduce the rate at which capacity decreases, we recommend the following steps for Battery Pack storage.

1. Charge the Battery Pack to 80% full.
2. Disconnect the Battery Pack from the Charger.
3. Every 3 months verify that the Battery Pack is above 20% full.
4. If the Battery Pack is below 20% full, connect it to the Charger and charge it until it reaches 80% full.

To maximize the lifetime capacity of the Battery Pack, keep the Battery Pack at a temperature between -4° F and +77°F (-20° C to +25°C) during charging and storage.

9.2 Storing the Outboard

When storing the Outboard in the tilted up position, engage the tilt lock.

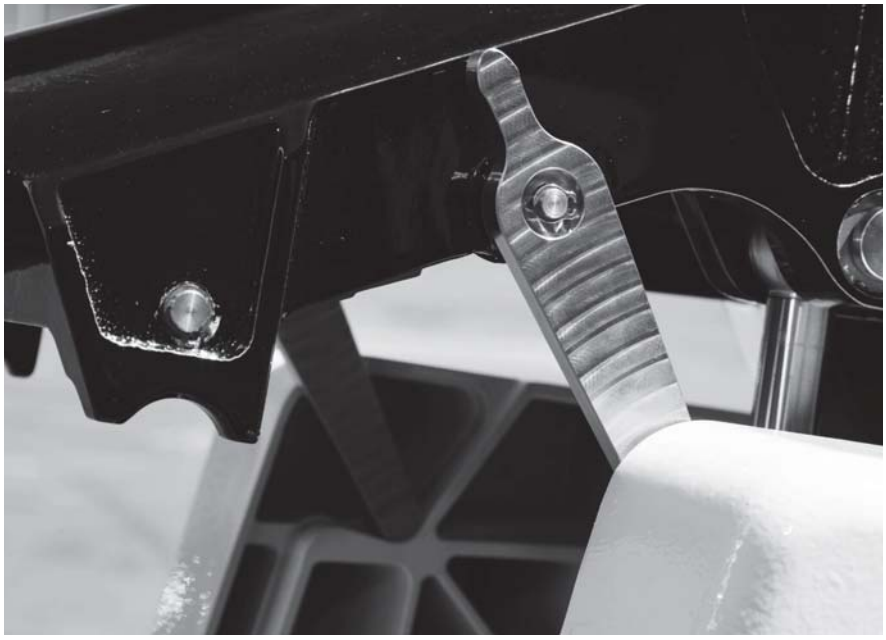

Figure 9.1 – Tilt Lock in the Locked Position

NOTICE

- If storing the Outboard indoors or on land, it is recommended to store the Outboard in the shade and out of direct sunlight when possible, to ensure the motor is cool when ready for use so that the motor isn't immediately subjected to power derating due to temperature.
- If storing the Outboard outdoors on the water in high ambient temperatures and direct sunlight, it is recommended to keep the motor tilted down and in the water to minimize solar heating and ensure the motor is cool when ready for use so that the motor isn't immediately subjected to power derating due to temperature.

10 INSTALLATION

It will take approximately one hour to install the Pure Outboard system on a boat after the previous motor and throttle have been removed. The installation can be completed with two people, or by one person if a crane is available to place and stabilize the motor during mounting. Installing the Pure Outboard system on a boat must be done when the boat is on a trailer on a flat surface and in a dry place.

Additional information and instructional videos to assist with installation are available by contacting Pure Watercraft.

⚠ WARNING

Installation of the Pure Outboard system should only be done on land, and not while the boat is in the water. This is to prevent the Outboard from falling in the water and ensures adequate access to secure the mounting hardware.

10.1 Preparing for System Installation

Installation shall proceed by first preparing the boat for system installation, then installing the Battery Pack(s), then installing the Outboard motor, then installing the Throttle, and lastly connecting the Cables between the system components. These instructions assume that the Pure Outboard system is being installed on a boat with no other propulsion system onboard. For guidance on removing legacy propulsion systems from a boat, contact the manufacturer of the legacy propulsion system or consult a certified marine mechanic/technician.

10.1.1 Selecting the Location for the Battery Pack(s)

⚠ CAUTION

- Be sure to place Battery Pack(s) on a flat surface, within +/-15 degrees of horizontal.
- Choose a location where the Battery Pack(s) has (have) a low likelihood of being flooded with water or subject to water pooling or standing water buildup.
- Place the Battery Pack(s) in a location which enables airflow. If placing the batteries in a hatch or compartment, be sure there is a vent to allow airflow to the Battery Pack(s).
- Place the Battery Pack(s) in a location where they will not cause weight imbalance onboard.
- Avoid placing the Battery Pack(s) in locations where someone may attempt to sit or stand on the Battery Pack.

10.1.2 Selecting the Location for Mounting the Throttle

The Throttle can be mounted directly to a horizontal surface on the boat using the mounting points on the bottom of the Throttle, or on a vertical surface on the boat using the Throttle mounting bracket (see Figure 10.18 & Figure 10.19). The Throttle should be mounted to a vertical or horizontal flat surface in a place with enough clearance for the Throttle handle to move the full range of motion in the forward and reverse direction and within reach of the helm station of the boat. It should be installed on a surface which can be accessed from behind for installation and can accept the fasteners without interfering with other gauges or wiring.

10.1.3 Cable Routing Path

- Plan the routing of the Cables between the components to ensure that the Cables are of sufficient length. Take into account the orientation of the receptacles on each component and the bend radius of the Cables
- The installation may require drilling holes to provide access for Cables to pass.
- Ensure the routing path where holes or channels are required can be at least 2.75” in diameter to accommodate pass-through of the Power Data Cable connector.

10.2 Installing the Battery Pack(s)

1. Ensure there are not any Cables connected to the Battery Pack(s).
2. Use an overhead crane or a second person to lift the Battery Pack(s), one at a time, into the hull.

⚠ CAUTION

- The Battery Packs are 118 pounds – do not lift by yourself.
- Do not permanently install Battery Packs on their edge or at a greater angle than 15 degrees from level.

10.3 Running the Cables

Route the Cables through the hull so that each end is in the appropriate location prior to installing each system component.

⚠ CAUTION

Do not connect the Power Data Cables to the Battery Pack at this time. Wait until all system components are installed before connecting the Power Data cables to the Battery Packs.

NOTICE

- If crossing the Cables over a fiberglass bulkhead, use a grommet to prevent damage to the Cables over time.
- Do not kink the Cables.
- Do not route the Cables over components that may get hot.

1. Run the small end of the Throttle Cable plug from the Battery Pack up to the helm through the established path that carries the boat's steering cable (typically up the starboard side under the gunwales). Do not connect the Cable to the Battery Pack.
2. Run a Power Data Cable from the Outboard to the Battery Pack. Do not connect the Cable to the Battery Pack.
3. If using more than one Battery Pack, run the Power Data Cable from one Battery Pack to the other(s).

10.4 Installing the Outboard

10.4.1 Necessary Tools:

- ¾" combination wrench (Qty: 2)
- ¾" ratchet extension
- Adjustable wrench
- 15/16" wrench
- 4mm Allen wrench
- Marine grease (Quicksilver 2-4-C with Polytetrafluoroethylene (PTFE) is the type used and recommended by Pure Watercraft)
- Loctite 222MS Threadlocker

⚠ CAUTION

Only use the specified locking nuts to install the Outboard and connect to steering. Do not use common non-locking nuts. These may come loose during use and cause the motor to disconnect from the steering rod, resulting in a sudden loss of control of the boat.

NOTICE

- Confirm that the transom mounting surface is flat and the transom bracket rests flush to the transom.
- Be sure to maintain clearance between the rounded inside edge of the transom bracket and the top edge of the transom. Pressure from the transom on the inside of the transom bracket may cause the bracket to fail.

Figure 10.1 – Appropriate Clearance Between Transom Edge and Inside of Transom Bracket

10.4.2 Drilling Mounting Holes

The Pure Outboard motor conforms to the ABYC standard for Outboard bolt mounting patterns for 23–50HP engines. If new mounting holes are needed, use the mounting hole drilling template to drill four half-inch (½”) diameter holes.

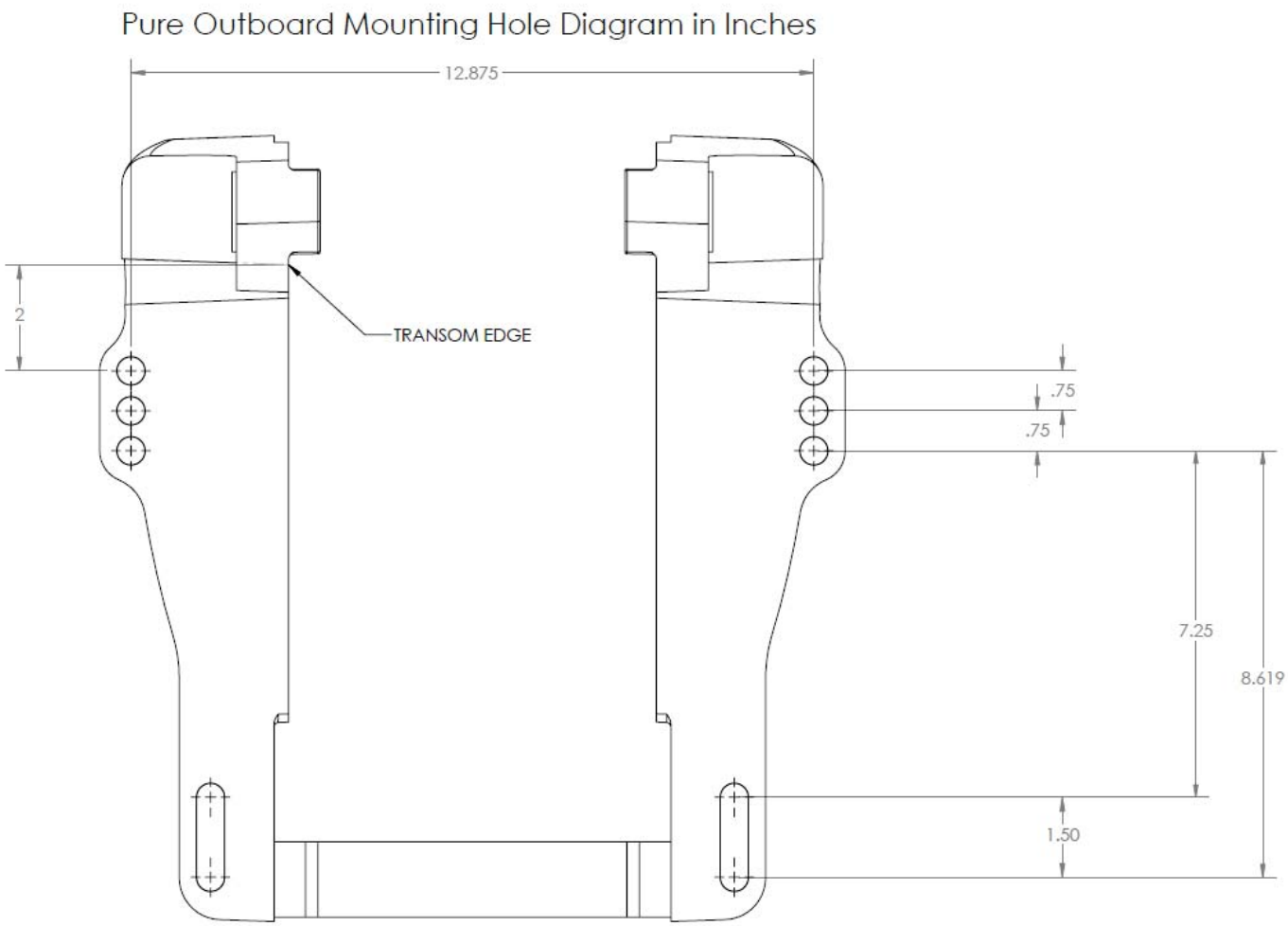

Figure 10.2 – Outboard Mounting Template

10.4.3 Mounting the Outboard

Parts:

Description	Quantity	
½” diameter bolts	4	

½” diameter Nyloc nuts	4	
316 grade stainless steel washer 0.53” inner diameter 1.25” outer diameter	4	
316 grade stainless steel washer 0.58” inner diameter 1” outer diameter	4	

1. Insert a bolt and 1.25” washer into the top two holes on the transom, pushing them from the inside of the transom towards the outside.
2. Use a crane or two people to lift the Outboard on to the edge of the transom.
3. Align the bolts with the holes on the Outboard transom mount and push the bolts through.

Figure 10.3 – Bolts Aligned in Transom and Outboard

4. Put the 1” washers and nuts on the bolts and tighten just enough to keep the Outboard in place. It is best to tighten all of the nuts once all four bolts are in place.
5. Insert the remaining two bolts and 1.25” washers into the bottom holes on the transom, starting from the inside of the transom and pushing out.
6. Attach the remaining two 1” washers and nuts to each of the bottom bolts.
7. Tighten using the wrench and ratchet extension.

Figure 10.4 – Tightening Bolts with Wrench and Ratchet Extension

10.4.4 Connecting to the Steering – Starboard Side Cable

Parts:

Description	Quantity	
Steering linkage	1	

9/16” diameter nuts	2	
9/16” diameter washers	4	
Steering Heim joint	1	
Steering Heim bolt	1	
Steering Heim washers	2	

1. Confirm the steering cable is compressed by turning the steering wheel all the way towards the port side (rotate steering wheel counterclockwise).
2. Grease the steering cable with marine grease.

Figure 10.5 – Applying Marine Grease on Steering Cable

3. Insert the steering Cable into the steering tube.

Figure 10.6 – Inserting the Steering Cable into the Steering Tube

4. Tighten the nut on the steering tube.

Figure 10.7 – Tighten the Nut on the Steering Tube

5. Turn the boat's steering wheel to center the Outboard.

6. Place a washer and a nut (#1 and #2 in Figure 10.8) on the underside of the Outboard steering bracket.

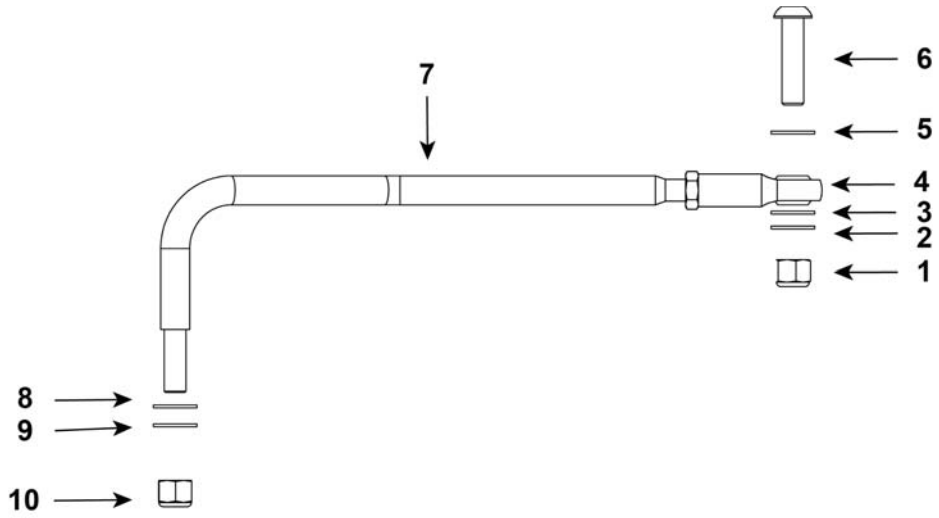

Figure 10.8 – Steering Linkage Assembly

7. Place another washer and the steering heim joint (#3 and #4 in Figure 10.8) on top of the steering bracket.

8. Place a washer on top of the steering heim joint and insert the bolt (#5 and #6 in Figure 10.8) through the washers, steering heim joint, and nut. Tighten the bolt into the nut on the underside of the bracket.

Figure 10.9 – Attaching Steering Linkage to Outboard's Steering Arm

9. Insert one end of the steering linkage into the steering heim joint (#7 and #4 in Figure 10.8) and the other end into the hole in the steering cable.

Figure 10.10 – Insert Steering Linkage on Steering Cable Hole

10. Secure the steering linkage to the steering cable by placing one washer on either side of the end of the steering linkage (#8 and #9 in Figure 10.8) and tightening the nut on the end of the steering linkage (#10 in Figure 10.8).

Figure 10.11 – Secure Steering Linkage to Steering Cable

10.4.5 Installing the Outboard on a Jackplate

When installing the Outboard on a jackplate, be sure the Outboard is mounted with enough water to the prop and confirm that the Cable remains out of the water in both unloaded and loaded scenarios.

To select the proper bolt length, measure the total thickness of the transom, jack plate, and Outboard clamp, including any additional mounting spacer, shim, or noise dampening material. Then identify the length of the 316 stainless steel bolt which accommodates the combined thickness and can be secured with a 316 stainless steel Nylock unt.

10.4.6 Installing or Replacing the Propeller

⚠ WARNING

Power off the system and disconnect the Power Data Cable that connects the Outboard to the Battery Pack before attempting to install or remove the propeller.

Pure Watercraft has designed a custom propeller to optimize the efficiency of the Pure Outboard system. This propeller is 16” in diameter – larger than typical propellers on gas outboard engines. This is possible due to the flat torque curve of the electric motor, which does not stall at low RPMs as a gas engine would.

Parts:

Description	Quantity	
Propeller thrust washer – stern side	1	
Propeller thrust washer – bow side	1	
Propeller washer	1	

Propeller nut	1	
Tail cone fasteners	3	

The following steps are for installing the propeller on a new Outboard motor. If replacing a propeller, first remove the old propeller by performing steps 2 through 9 in reverse order.

1. Put marine grease on the propeller shaft.

Figure 10.12 – Apply Marine Grease on Propeller Shaft

2. Put the bow side thrust washer on to the propeller shaft with the wider diameter facing towards the gearbox.

Figure 10.13 – Bow Side Propeller Thrust Washer on Propeller Shaft

3. Align propeller with the hub and push on to the shaft until it abuts the bow side thrust washer.
4. Put the stern thrust washer (with the wider diameter facing away from the propeller), propeller washer, and nut onto the shaft.
5. Tighten the propeller nut.

Figure 10.14 – Tightening Propeller Nut

6. Add Loctite 222MS Threadlocker to the threads of each fastener.
7. Insert fasteners in the tail cone.
8. Place the nose cone on the Outboard, aligning the fasteners.
9. Use a 4 mm Allen wrench to tighten the fasteners to 5 newton meters (Nm) +/- 0.5 Nm.

Figure 10.15 – Tightening Tail Cone Fasteners

10.5 Installing the Throttle

Tools:

- 5mm Allen wrench
- Loctite 425 threadlocker

10.5.1 Option 1: Top Mount

Parts:

Part No.	Description	Quantity
ISO4762-M6x10-A4-70	M6x10 316 stainless steel screws	4
N/A	Throttle Cable	1
N/A	Auxiliary Power Output Cable*	1
N/A	Auxiliary Output Connector Cap**	1

*Use if connecting 12V to onboard electronics or an external 12V battery.
**Use if not connecting 12V to onboard electronics or an external 12V battery.

Installation steps:

1. Drill four holes of diameter 6.6 mm +/- 0.2 mm according to the spacing in Figure 10.19.

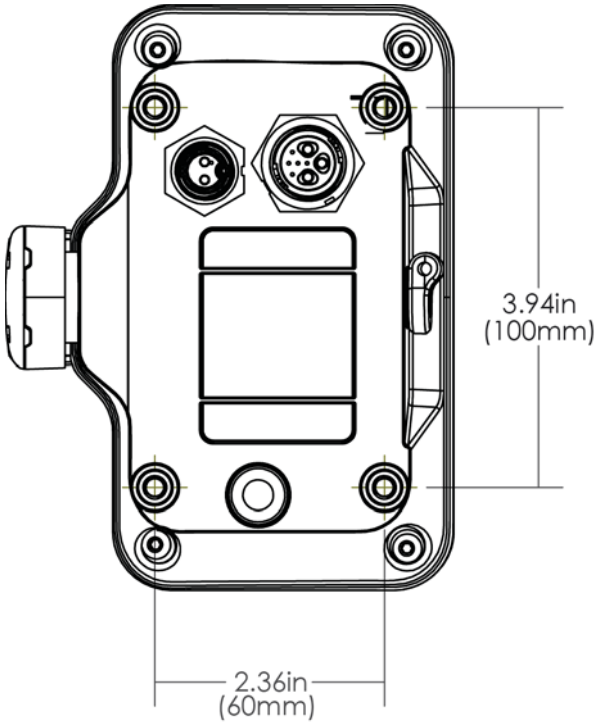

Figure 10.16 – Underside of Throttle Showing Mounting Hole Pattern

2. Route Throttle Cable from the Battery Pack and attach the connector to the corresponding connector on the underside of the Throttle.
3. If choosing to use the auxiliary power output to power electronics on board, connect the Auxiliary Power Output Cable to the corresponding connector on the underside of the Throttle.
4. If not using the auxiliary power output, cover the auxiliary output connector with the Auxiliary Output Connector Cap.

Figure 10.17 – Auxiliary Output Connector Cap Attached

5. Add Loctite 425 threadlocker to the threads of each M6x10 fastener.
6. Insert the M6x10 fasteners through the underside of the mounting surface to secure the throttle in place. Tighten to 8 N-m (5.8 ft-lb).

NOTICE

Only use fasteners provided by Pure Watercraft to mount the throttle. Using fasteners that are the incorrect length may cause damage to the Throttle.

10.5.2 Option 2: Side Mount

Parts:

Part No.	Description	Quantity
002080-A-001 (short) 002080-A-002 (tall)	Throttle Mounting Bracket	1
002181-A-001	Mount Backing Plate	1
ISO4762-M5x40-A4-70	M5x40 316 stainless steel screws	4
DIN125-M5-A4-70	M5 316 Stainless Steel Flat Washers	4

ISO4762-M6x10-A4-70	M6x10 316 stainless steel screws	4
N/A	Split grommets	2
N/A	Throttle Cable	1
N/A	Auxiliary Power Output Cable*	1
N/A	Auxiliary Output Connector Cap**	1

*Use if connecting 12 volt power to onboard electronics or a 12 volt battery.
**Use if not connecting 12 volt power to onboard electronics or a 12 volt battery.

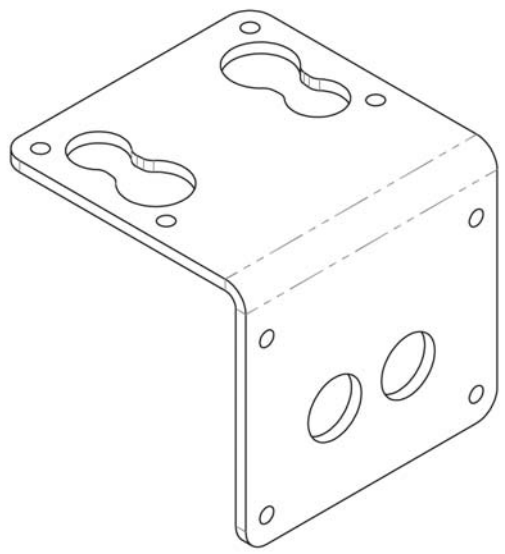

Figure 10.18 - Throttle Mounting Bracket (short)

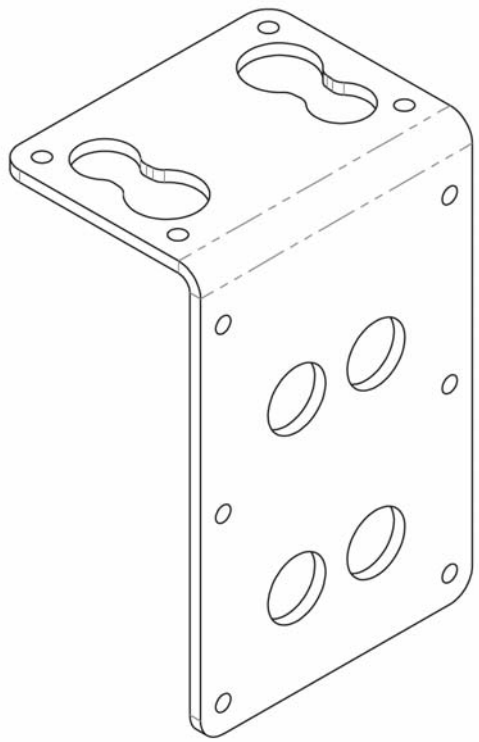

Figure 10.19 - Throttle Mounting Bracket (tall)

1. Secure the mounting bracket to the side of the hull using the mount backing plate, the flat washers, and the M5x40 screws.

    a. Place the Throttle mounting bracket in the desired location at desired height on the side of the hull. Use a pen or marker to mark the placement of the four perimeter mounting holes and the center two cable routing holes on the side of the hull.

    b. For the perimeter mounting holes, drill four holes of ⅜” diameter through the hull’s inner sidewall. For the center cable routing holes, drill two holes of 1” diameter through the hull’s inner sidewall.

c. Place the mount backing plate behind the inner sidewall

d. Run the Throttle Cable and Auxiliary Power Output Cable through the mount backing plate and through the two 1” holes in the center.

e. Add split grommets to center holes in throttle bracket to protect throttle and 12 volt cabling

f. Add Loctite 425 threadlocker to M5 fasteners

g. Insert 4 perimeter m5 fasteners, align with mount backing plate, and tighten to 5 N-m (3.6 ft-lb).

2. Add Loctite 425 threadlocker to the threads of each M6x10 fastener.

3. Place the Throttle on the mounting bracket so the holes align. Insert the M6x10 fasteners on the underside of the mounting bracket through the holes to secure the Throttle in place. Tighten to 8 N-m (5.8 ft-lb).

4. Attach the Throttle Cable to the underside of the Throttle.

5. If using the auxiliary power to power electronics on board, connect the Auxiliary Power Output Cable to the corresponding connector on the underside of the Throttle.

6. If not using the auxiliary power, cover the auxiliary power output connector with the Auxiliary Output Connector Cap.

10.6 Connecting the Auxiliary Power

The Pure Watercraft system provides up to 80 Watts of 12 volt auxiliary power (up to 10 amps) for accessories on board the boat. This is enough power for standard boat accessories like navigation lights, radios, bilge pumps, and USB outlets.

The auxiliary power is available through the included Auxiliary Power harness that connects to the auxiliary power receptacle on the Throttle and provides two bare wires to connect into either an electrical box in the boat, or connect to an existing 12 volt battery that is powering electronics on board in order to trickle-charge that 12 volt battery. If auxiliary power is not needed, the Auxiliary Power harness can be omitted.

⚠ CAUTION

Be sure to check the gauge of the wire and size of the fuse on the boat to ensure it can handle 10 amps. If the wiring cannot handle 10 amps, be sure to install the appropriately sized fuse for the vessel’s wiring. Consult with a qualified marine technician or licensed electrician to ensure the proper fuse configuration.

12V “Buffer Battery” Option

Adding a 12 volt “buffer battery” allows the vessel’s 12 volt accessories (bilge pump, stereo, lights, etc.) to run without turning on the Pure Outboard system.

When the Pure Outboard system is powered off, the accessory switch activates a relay which provides power from the 12 volt battery to the fuse panel. When the Pure Outboard system is powered on, the same relay is opened, which allows the Pure Outboard system to charge the 12 volt battery. When the Pure Outboard system is powered on, the fuse panel can draw from the Pure Outboard system and the 12 volt battery in the event of a large current draw.

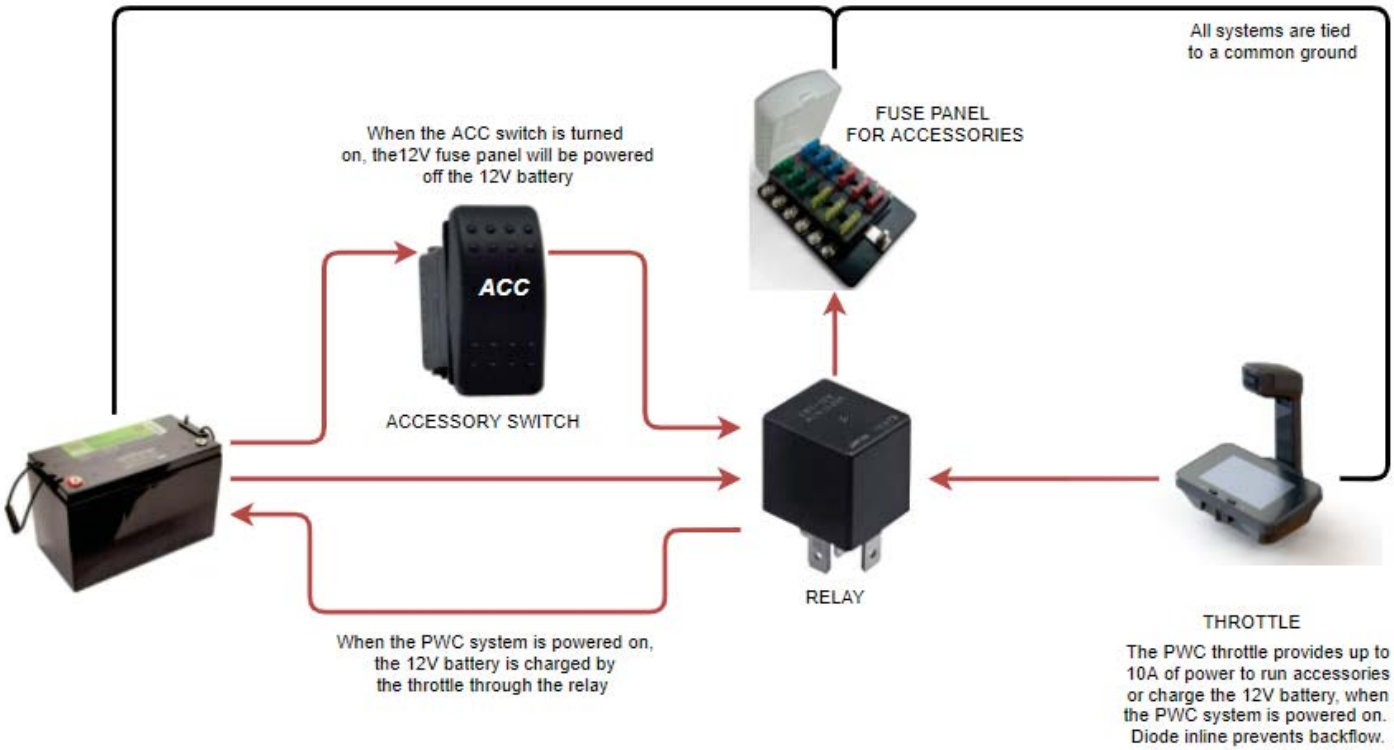

Figure 10.20 - 12V Buffer Battery Wiring Diagram

10.7 Connecting the Pure Outboard System Components

1. Connect the Throttle Cable from the Throttle to the Battery Pack by inserting the connector into one of the Battery Pack receptacles. Either receptacle will work.
2. Connect a Power Data Cable to the Battery Pack by inserting it into the remaining open Battery Pack receptacles. The other end of this cable will either connect into the Outboard or to another Battery Pack.

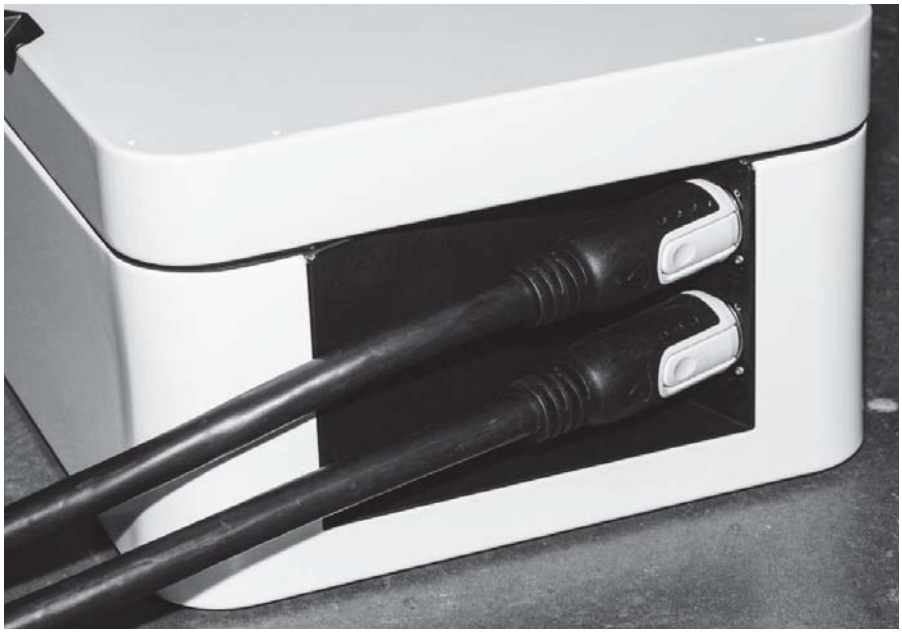

Figure 10.21 – Battery Pack with Power Data Cables Connected

3. Connect the Power Data Cable running from the Battery Pack(s) into the receptacle on the Outboard and secure the Power Data Cable using the rubber Cable strap (#2 in Figure 4.2 in Section 4.2.1).

10.8 Mounting the Charger

The Charger was designed to be either a stationary or a portable device, depending on the vessel's charging location. It can be mounted to a wall or pedestal where regular charging will occur, such as a garage or dock, or it can be stored on its own or in the boat and be carried using the handles (weighs 24 lbs) to the location of charging.

The Charger can be mounted on the wall using 4 screws.

Description	Quantity
Number 10 size stainless steel screw, 1" long	4

4. Use the Charger Mounting Template below to drill 4 holes of ⅛" diameter (#21 drill bit size). The holes are 5" apart in the Y axis and 15.25" apart on the X axis.

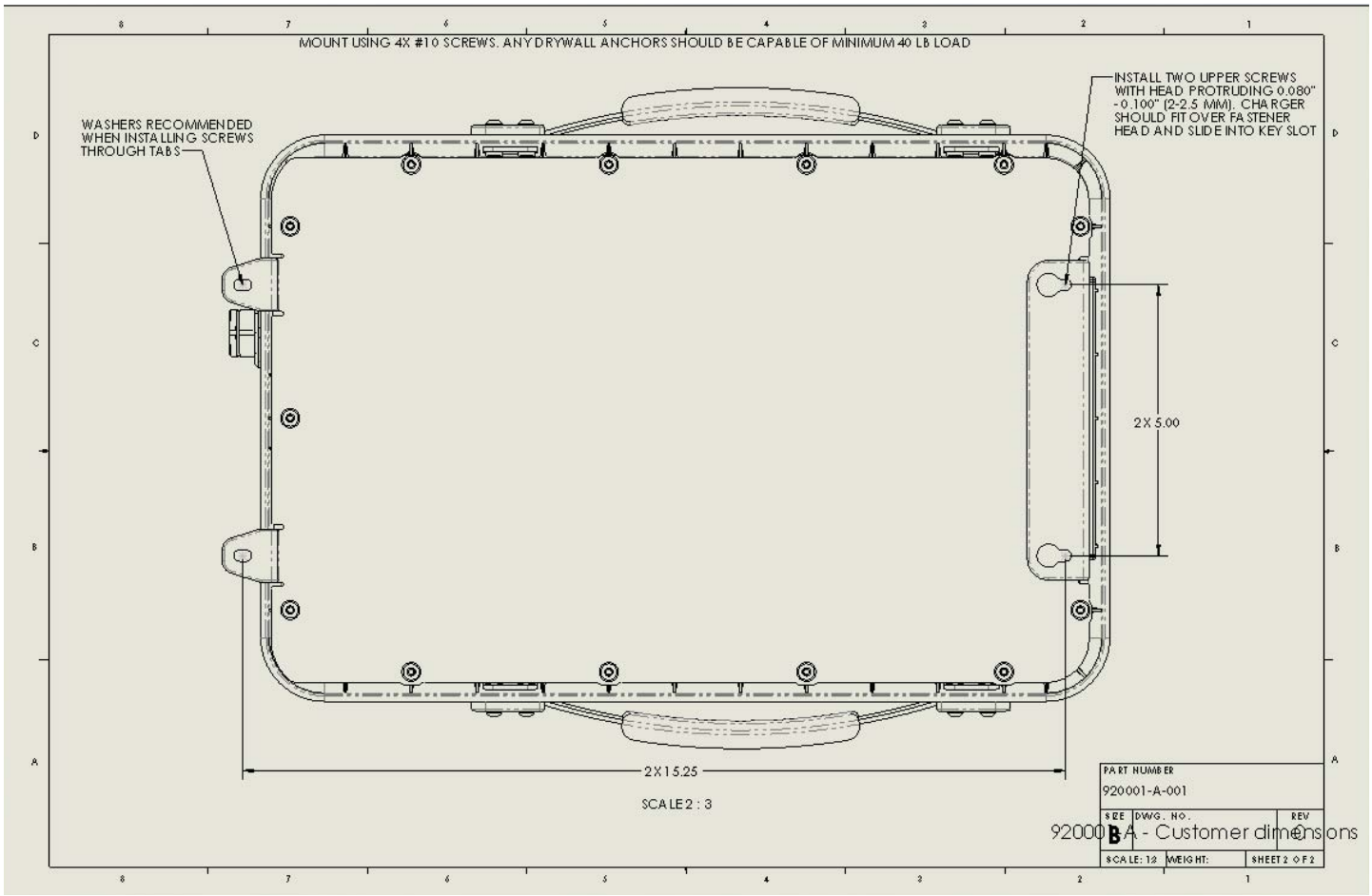

Figure 10.22 - Charger Mounting Template

5. Insert the fasteners into the top two holes.
6. Align the Charger mounting points with the top two screws and hang the Charger on the top two screws.
7. Align the bottom two Charger mounting points with the drilled holes and insert the remaining two screws.

11 SYSTEM CARE

⚠ WARNING

- If any component becomes mechanically damaged, immediately stop using the system and contact Pure Watercraft.
- Always keep the high-voltage Battery Packs clean and free from dirt.

After each use:

- Rinse the Outboard with fresh water, especially after operation in salt or brackish water.
- To clean the Pure Outboard motor surfaces, use a boat soap which is approved for marine use in your jurisdiction.
- Check the propeller for damage or tangled weeds.
- Keep the Outboard tilted up out of the water if storing the boat in the water.

Every one year or 100 hours:

- Visually inspect for visible corrosion using the following criteria:
    - Inspect all painted surfaces. Any bubbling under the paint or paint peeling could indicate corrosion underneath. Contact Pure Watercraft for further guidance on inspection and/or repair
    - Inspect all hardware. Light surface corrosion that discolors the hardware but does not deform it or change the material properties is acceptable. Any fastener with more corrosion than light surface corrosion should be replaced.
    - Inspect all electrical receptacles. If any corrosion or damage is found, contact Pure Watercraft for further guidance.
    - Inspect propeller shaft. Light surface corrosion is acceptable. Any corrosion that causes material to flake off or deforms the shape of the propeller spline or propeller retention nut threads is cause for concern and Pure Watercraft should be contacted.
    - Inspect the hydraulic cylinder rod of the tilt-trim unit. If even light corrosion is present the hydraulic seal could be compromised. Contact Pure Watercraft for further guidance.
- Inspect sacrificial anode for degradation. If more than 50% of the material has been lost, replace the anode.
- Inspect for visible damage on any components. Small dents and scratches are acceptable but if any cracks, bent, or otherwise compromised structure is found, contact Pure Watercraft for guidance.
- Check all system cables for any chafe. If chafing is found:

- If only the outer black cable insulation is damaged but the internal cables are not visible, correct the source of the chafe by smoothing out the edge, adding a rubber or foam bumper, wrapping the cable in anti-chafe tape, etc.
- If the chafe damage has penetrated through the outer black insulation and the interior cables are visible, the cable must be replaced.

Software updates

- The system will update via over-the-air updates transmitted wirelessly to the Throttle via Bluetooth from the Pure Watercraft Mobile App on the paired mobile phone.
- It is recommended to promptly install each new update to ensure optimal and safe system operation, as some updates may include safety enhancements.
- Failure to install updates may result in system malfunction and may limit Pure Watercraft's ability to service the system.

Battery Pack care

- Charge the Battery Pack according to the charging schedule outlined in Section 6.3 of this User Guide.
- Always store the Battery Pack at ambient temperatures between -40ºF–158ºF (-40ºC–70ºC)
- Do not clean with a pressure washer. Wipe away any dirt or debris using a damp towel.

Replacement of the sacrificial anode

- The Outboard has a sacrificial anode, which protects the Outboard against galvanic corrosion by corroding itself, rather than the Outboard metal (see #12 in Figure 4.2 in Section 4.2.1). It is intended to erode over time.

Figure 11.1 – New Sacrificial Anode

- Check the status of the anode periodically, especially if operating in salt water.
- For best corrosion protection, replace the anode before it becomes fully corroded.
- Replacing the anode:
    - Use ½” ratchet wrench to remove the anode bolt and accompanying washer.
    - Install new identical marine anode with alignment peg centered in slot in anode recess. Ensure anode is seated flush in the recessed flat section of housing and does not rock
    - Reinstall anode bolt and washer, torque to 12 Nm.

NOTICE

Do not paint or wrap the exterior of the Outboard, as it may result in overheating of internal components, corrosion under the wrap, and may affect Warranty coverage.

12 TROUBLESHOOTING

System Startup

Issue	Troubleshooting Steps
Throttle does not power on.	1. Confirm that the Throttle Cable is properly connected to the Battery Pack. 2. Confirm that the Throttle is properly connected to the Throttle Cable on the underside of the Throttle. 3. Confirm that all other system components are securely connected. 4. Connect Charger to one Battery Pack receptacle while the Throttle Cable is connected to the other receptacle and turn the Charger On. Leave the Charger On for at least 10 minutes (even if the Battery Pack is fully charged), then attempt to power on the Throttle.
Restart screen persists after pressing the “Restart” button.	1. Shut down and restart the Throttle by holding down the Power button until the screen goes black. 2. Press the Power button to power on again.

System Operation

Issue	Troubleshooting
System does not run at full power.	1. Compare the icons displayed to those shown in Section 4.5.7 of this User Guide. 2. Depending on the notification shown, follow the remedy steps listed in Section 4.5.7.
System overheating notification persists.	1. Stop operation of the Outboard by putting the Throttle in the neutral position. 2. Ensure that the Battery Pack(s) are not in direct sunlight. 3. Ensure the Battery Pack(s) have adequate airflow by removing any obstructions from all sides of the Battery Pack(s).
Tilt/trim button does not raise or lower the motor.	1. Verify that the Throttle is powered On. 2. Confirm the Tilt Lock is not engaged. 3. Wait 45 seconds and then attempt to engage again. 4. Verify that all system Cables between the Throttle and the Outboard are properly connected.

Charging

Issue	Troubleshooting
Red light is flashing on the Charger.	1. Power Off the Charger by pressing the Power button on the Charger. 2. Restart the Charger by pressing the Power button again. 3. Check that the Power Data Cable between the Charger and the Battery Pack is properly connected.
The light does not turn on when pressing the button on the Charger.	1. Confirm that the AC power Cable is connected to the wall outlet and the Charger. 2. Check the breaker of the outlet to confirm that the power is on.

Mobile App

Issue	Troubleshooting
Mobile App does not pair with the Pure Outboard.	Note: Only one phone at a time can connect with the Pure Outboard system. If one phone is already connected, other phones that are within Bluetooth range and have the Pure Watercraft Mobile App will display a message in the App showing that another phone is already connected to that system. See Section 7.3. 1. Confirm that Bluetooth is enabled on the phone. 2. Unpair the device by tapping “Unpair” within the App’s Settings. 3. Within the Bluetooth Settings of the phone, find the Pure Outboard (it may have a personalized name if the system was renamed in the App) and tap Forget Device. 4. Attempt to re-pair.

13 WARRANTY

Details regarding warranty coverage for the Pure Outboard system are specified in the Pure Outboard Limited Warranty available online at www.purewatercraft.com.

14 DECLARATIONS AND NOTIFICATIONS

14.1 Conformance

Pure Watercraft, Inc. declares that the Pure Outboard electric propulsion system conforms with the following standards and guidelines:

14.1.1 FCC & ISED Certification

Component	Model Number	FCC ID	IC ID
Throttle	THG1	2AZTO-THG1	27263

FCC Compliance Statement
This device complies with part 15 of the FCC Rules. Operation is subject to the following two conditions: (1) This device may not cause harmful interference, and (2) this device must accept any interference received, including interference that may cause undesired operation.

CAUTION: The grantee is not responsible for any changes or modifications not expressly approved by the party
responsible for compliance. Such modifications could void the user's authority to operate the equipment.

This equipment has been tested and found to comply with the limits for a Class B
digital device, pursuant to part 15 of the FCC Rules. These limits are designed to provide reasonable protection against harmful interference in a residential installation. This equipment generates, uses and can radiate radio frequency energy and, if not installed and used in accordance with the instructions, may cause harmful interference to radio communications. However, there is no guarantee that interference will not occur in a particular installation. If this equipment does cause harmful interference to radio or television reception, which can be determined by turning the equipment off and on, the user is encouraged to try to correct the interference by one or more of the following measures:

- Reorient or relocate the receiving antenna.
- Increase the separation between the equipment and receiver.
- Connect the equipment into an outlet on a circuit different from that to which the receiver is connected.
- Consult the dealer or an experienced radio/TV technician for help.

Canadian Compliance Statement

This device contains license-exempt transmitter(s)/receiver(s) that comply with Innovation, Science and Economic Development Canada license-exempt RSS(s). Operation is subject to the following two conditions:

(1) This device may not cause interference.

(2) This device must accept any interference, including interference that may cause undesired operation of the device.

L'émetteur/récepteur exempt de licence contenu dans le présent appareil est conforme aux CNR d'Innovation, Sciences et Développement économique Canada applicables aux appareils radio exempts de licence. L'exploitation est autorisée aux deux conditions suivantes :

L'appareil ne doit pas produire de brouillage;

L'appareil doit accepter tout brouillage radioélectrique subi, même si le brouillage est susceptible d'en compromettre le fonctionnement.

14.1.2 IP-X7 Standard

All Pure Outboard components have been tested to be waterproof according to the IP-X7 standard, meaning the component was submerged in 1 meter of water for 30 minutes and experienced no water ingress.

14.2 Product Disposals

DO NOT dispose of any Pure Outboard system components in household waste.

Electronic devices must be disposed of according to the regional directives regarding electronic waste disposal. For assistance disposing of any parts of the Pure Outboard system, please contact Pure Watercraft.

14.3 California Proposition 65 Warning

California Proposition 65 requires businesses to provide warnings to Californians about exposures to chemicals that cause cancer, birth defects or other reproductive harm.

The Throttle is made using a plastic material called ABS which is made using Acrylonitrile and Styrene and may remain on the parts in trace amounts. Both of these chemicals are on the list of Proposition 65 chemicals known to cause cancer.

These and other Proposition 65 chemicals may be present in trace amounts or enclosed within another material where exposure is unlikely or negligible. This warning is being provided out of an abundance of caution.

⚠**WARNING**: This product can expose you to acrylonitrile and styrene, which are known to the State of California to cause cancer. For more information go to www.p65warnings.ca.gov.

15 TERMS & TERMINOLOGY

ABYC	The American Boat and Yacht Council (ABYC) is a non-profit organization which sets standards for the safe construction and maintenance of boats in the United States. It is a standards development member of the American National Standards Institute.
Amps (A)	A unit of electric current measuring the amount of charge flowing past a specified point during a time interval.
Battery capacity	A measure of the maximum kilowatt-hours of energy the battery can output when new.
Bluetooth	A short-range wireless technology standard used for exchanging data between fixed and mobile devices over short distances using UHF radio waves in the ISM bands, from 2.402 GHz to 2.48 GHz.
Energy	The capacity for doing work, measured in kilowatt-hours (kWh). The Battery Packs store energy.
Energy throughput	The amount of cumulative energy that has run through a component or system, measured in kilowatt-hours (kWh)
Foot-pound (ft-lb)	A foot-pound is a unit of work equal to the energy transferred upon applying a force of one pound-force (lbf) through a linear displacement of one foot.
FCC	The Federal Communications Commission (FCC) is an independent agency of the United States government that regulates communications by radio, television, wire, satellite, and cable across the United States.
Knot (kt)	Unit of measure of speed commonly used in the maritime industry. A vessel that travels at one knot is moving at a rate of one nautical mile per hour.
Nautical mile (NM)	A nautical mile is based on the circumference of the earth, and is equal to one minute of latitude. It is slightly more than a statute (land measured) mile (1 nautical mile = 1.1508 statute miles).
Newton-meter (N-m)	A Newton-meter is a unit of torque, equal to the torque resulting from a force of one newton applied perpendicularly to the end of a moment arm that is one metre long.
Power	Energy transfer per unit of time. The rate of producing or consuming energy, measured in Watts (W) or kilowatts (kW). Electrical power is equal to volts multiplied by amps. Rotational mechanical power is equal to rotational velocity multiplied by torque.
IP-X7	An ingress protection standard established by the International Electrotechnical Commission (IEC) used to classify the degree of protection from water provided by an enclosure. Ingress protection to IP-X7 means the product was submerged in 1 meter of water for 30 minutes and experienced no water ingress.

State of charge	The level of energy in a battery relative to its capacity. Measured in percentage points: 0% = empty; 100% = full.
Transom	The flat surface forming the stern of the boat. The Outboard mounts to a vessel's transom.
Transom saver	An accessory used between the trailer and the motor which supports the weight of the motor and relieves strain to prevent damage to the motor and the vessel's transom when trailering.
Volts (V)	Electric potential (energy difference between two points), measured in volts (V).
Watts (W)	A unit of power. For electrical power it can be calculated as watts (W) = volts (V) x amps (A). A kilowatt is 1,000 watts. For rotational mechanical power it can be calculated as watts (W) = rotational speed (RPM) x torque (Nm) x 0.105.
Watt-hour (Wh)	A unit of measurement for energy. It is expressed as power delivered over a period of time (an hour) which provides a way of measuring energy delivered. One Watt-hour is equal to one Watt of power delivered during one hour. A kilowatt-hour (kWh) is 1,000 Wh.

16 CONTACTING PURE WATERCRAFT

For product support, questions, or feedback, contact Pure Watercraft in the following ways:

1. Through the Mobile App, via the form on the Help page.
2. Through the web, by visiting www.purewatercraft.com and tapping the "Owner Login" link.

17 LIST OF FIGURES IN THIS USER GUIDE

Figure 4.1 – Pure Outboard System Components
Figure 4.2 – Outboard Features
Figure 4.3 - Outboard dimensional drawing
Figure 4.4 - Outboard dimensional drawing
Figure 4.5 - Outboard Dimensional Drawing
Figure 4.6 - Outboard Dimensional Drawing
Figure 4.7 – Tilt/Trim Button on the Throttle
Figure 4.8 – Tilt/Trim Position on the Throttle Display
Figure 4.9 – Tilt Lock in the Ready-to-Lock Position
Figure 4.10 – Tilt Lock Engaged
Figure 4.11 – Removing the Cable from the Outboard
Figure 4.12– Loosening the Release Valve Fastener
Figure 4.13 – Lifting the Outboard via the Anti-Ventilation Plate
Figure 4.14 – The Steering Lock in the Locked and Unlocked Position
Figure 4.15 – Battery Pack Features
Figure 4.16 – Charger Features
Figure 4.17 - Charger Mounting Diagram
Figure 4.18– NEMA 5–15 Plug and Outlet
Figure 4.19 – NEMA 14-50 Plug and Outlet
Figure 4.20 – NEMA SS2-50 Plug and Outlet
Figure 4.21 – Throttle Features
Figure 4.22 – Emergency Stop Connected to the Boat Operator
Figure 4.23 – Auxiliary Power Output Connector
Figure 4.24 – Auxiliary Power Output Cable
Figure 4.25– Auxiliary Output Connector Cap on Auxiliary Output Connector When Not in Use
Figure 4.26 – Throttle Screen Map
Figure 4.27 – Start Screen
Figure 4.28 – Main Screen, Neutral
Figure 4.29 – Main Screen, Forward/Reverse
Figure 4.30 – Secondary Main Screen
Figure 4.31– System Info Screen
Figure 4.32 – Low Battery State of Charge
Figure 4.33 – Temporary Derating Notification
Figure 4.34 – Persisting Derating Notification
Figure 4.35 – Temporary Over Temperature Notification
Figure 4.36 – Persisting Over Temperature Notification
Figure 4.37- System Reset Notification
Figure 4.38 – Cable Disconnected Notification
Figure 4.39 – Start-in-Gear Protection Notification
Figure 4.40 – Emergency Stop Disconnected Notification
Figure 4.41 – Tilt/Trim Timeout Notification
Figure 4.42 – Throttle Display when Charging
Figure 4.43 – Error Notification when Charging
Figure 4.44 - Power Data Cable
Figure 4.45 - Throttle Cable
Figure 5.1 Steering Lock in the Unlocked Position
Figure 5.2 Tilt Lock in the Locked Position
Figure 5.3 – Low Battery Derating Notification

Figure 5.4 – Over Temperature Derating Notification
Figure 6.1 – Charging a One-Battery Pack System on a Boat
Figure 6.2 – Charging a Two-Battery Pack System on a Boat
Figure 6.3 – Charging Two Battery Packs Off of the Boat, Using the Battery Pack Receptacle Terminating Plug
Figure 7.1 – The Pure Watercraft Mobile App icon, Mobile App available for Free Download
Figure 8.1 – Outboard Supported by a Transom Saver
Figure 9.1 – Tilt Lock in the Locked Position
Figure 10.1 – Appropriate Clearance Between Transom Edge and Inside of Transom Bracket
Figure 10.2 – Outboard Mounting Template
Figure 10.3 – Bolts Aligned in Transom and Outboard
Figure 10.4 – Tightening Bolts with Wrench and Ratchet Extension
Figure 10.5 – Applying Marine Grease on Steering Cable
Figure 10.6 – Inserting the Steering Cable into the Steering Tube
Figure 10.7 – Tighten the Nut on the Steering Tube
Figure 10.8 – Steering Linkage Assembly
Figure 10.9 – Attaching Steering Linkage to Outboard's Steering Arm
Figure 10.10 – Insert Steering Linkage on Steering Cable Hole
Figure 10.11 – Secure Steering Linkage to Steering Cable
Figure 10.12 – Apply Marine Grease on Propeller Shaft
Figure 10.13 – Bow Side Propeller Thrust Washer on Propeller Shaft
Figure 10.14 – Tightening Propeller Nut
Figure 10.15 – Tightening Tail Cone Fasteners
Figure 10.16 – Underside of Throttle Showing Mounting Hole Pattern
Figure 10.17 – Auxiliary Output Connector Cap Attached
Figure 10.18 - Throttle Mounting Bracket (short)
Figure 10.19 - Throttle Mounting Bracket (tall)
Figure 10.20 - 12V Buffer Battery Wiring Diagram
Figure 10.21 – Battery Pack with Power Data Cables Connected
Figure 10.22 - Charger Mounting Template
Figure 11.1 – New Sacrificial Anode