J.TOUR

VIGOR 5X PLUS

User's quick guide

JW915

Special anouncement

The document contains proprietary information of J.TOUR product and is not be disclosed or used without the prior written permission of Shenzhen HUATUO Intelligence Fashion &Technology Co.,Ltd and released authorization letter in offical website.

Shenzhen HUATUO Intelligence Fashion &Technology Co.,Ltd ownes the J.TOUR brand. Due to update and improvment of J.TOUR products and technologies, information in this document is subjected to change without notice. Login in J.TOUR's official website: http://www.jtour-sports.com/ or call the global operations center line: 400-900-8650 for more detailed instructions.

Due to the user habits and compatibility with associated application, this product attached GPS global positioning system . GPS as a validate auxiliary for positioning results, provides the user with a comparatively accurate measurement.by the way of one satellite calculation and the other verification

Disclaimer

Due to the different circumstances and application methods, the user that wears the equipment must pay special attention to the following instructions:

1、Since the product is the sophisticated wearable device, the factors such as the user wrong operation, external interference and devise problem may lead to the unsafe consequences. The

user needs to master the the basic knowledge of wearing electronics and take the risk on your own.

2、This product is widely used in a variety of environments and activities. User needs to consider the safety of the installation location and operation in movements, and take the safety

responsibility. Product manufacturers and operators does not undertake any responsibility for the above operation..

3、The product is not suitable for precise Measurement.

4、The product conforms to the FCC regulation in article 15 that describes the conditions of the Class B digital device. That means there may be mild radio communication radiation when using. User needs to adjust the position to avoid the interference by the other devices, that may lead to signal receiving and operation inproperly. In addition, it is also important to notice whether the product will affect the normal work of other communication devices. The above interference state is not within the guarantee of this product.

Battery Warning

Without complying with the following guidelines, the life of the lithium battery in the equipment may be reduced and user may take the risk of fire, chemical burn, electrolyte leakage.

• Do not expose the equipment to a heat source or at a high temperature location

• Do not bore or incinerate the equipment or battery.

• Do not use in extreme enviorment

• Dispose your device battery according to local applicable regulations and consulting local waste disposal department.

Health Warning

•Before starting or change your exercise program, please be sure to consult your doctor. if you wear a heart preceptor or other electronic devices inside your body, please consult your doctor before the use of heart rate monitor belt.

• The heart rate monitor belt and other JTOUR accessories are used by consumers rather than medical device and may be interfered by external factors, so the heart rate reading is only for

reference. The company will not take any responsibility for the consequences of any error reading.

Security Precaution

ALLERGIC REACTIONS OR SKIN IRRITATIONS MAY OCCUR WHEN PRODUCT IS IN CONTACT WITH SKIN, EVEN THOUGH OUR PRODUCTS COMPLY WITH INDUSTRY STANDARDS. IN SUCH EVENT, STOP USE IMMEDIATELY AND CONSULT A DOCTOR. .

Limited Warranty

The products will be guaranteed for 2 years from the date of purchase. During this period, the company will repair or replace the parts that have problems in normal use.

Button Function

LIGHT	short press to switch on/off the back light;
OK	Short press in home screen to enter the main menu; long press the shortcut in user defined view to add or remove the view; short press in the other view to enter or confirm
BACK	Long press to swith on/off the device; short press to return/exit; long press for 10 seconds to thermally start the device
UP	Short press as up button; long press the shortcut to enter the sport view; short press in stopwatch view to count;
DOWN	Short press as up button; long press the shortcut to enter the monitoring view; short press in stopwatch view to count lap

Preparation

Start: Long press the BACK button for 3 seconds to swith on. If it doesn't work, please connect the matching charging device to check whether the wristwatch has no power. When charging, fasten the charging plug properly according to the figure below, and tighten it at the position of the two fingers to ensure that the charging head and watch are fastened. It takes about 2 hours from the air to the full charge, and the specific situation is based on the power display in the watch.

Note: Dry the charging port before charging in order to avoidMetal contact smudge, short circuit or other risks caused by flood.

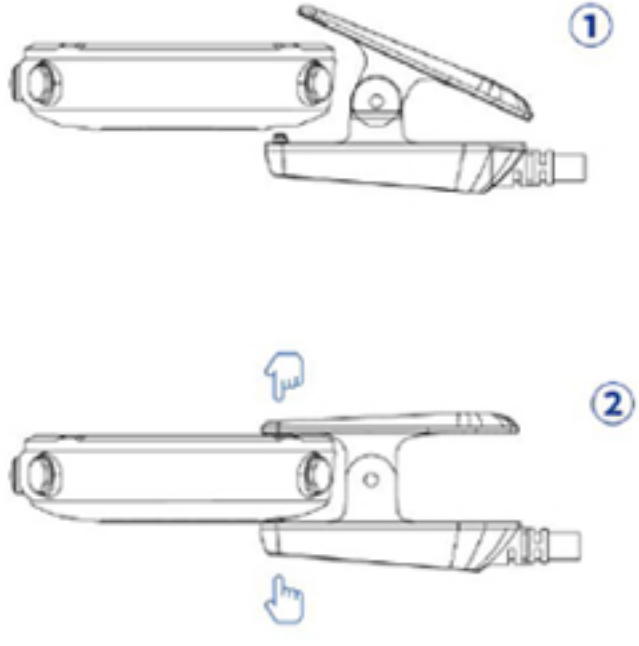

The default language is chinese. If you need to change, please select menu – language setting to

APP & Match

1. "JTOUR" APP is available for both IOS and Android operating system; scan the QR code to download and install.
2. Press OK button in main screen to enter the main menu; switch on bluetooth in “system” setting and record the device name “JW901_XXXX” in “About watch” settting
3. Start the APP, register and then switch on bluetooth; click “ ” on the top right corner of my page and match the name of the watch in the search list; A connection is displayed after successful matching. My home page shows the status “ ” of the connected device. device name “JT VIGOR5XP_XXXX”

device name “JW910_XXXX”

Message Notification

When the wristwatch and APP are connected successfully, the wristwatch can receive SMS, WeChat, phone and QQ message alert, and you can view information details in the reminder view. The reminder view disappears in 10 seconds, and can then be viewed in the custom shortcut view " Notice". Note: Settings reminder needs to be setted in my - wristwatch Setting - message Settings on the APP side.

Start to Use

Standby view: time, date, battery, bluetooth, alarm clock, quiet time and training plan reminder, etc. Select different view to represent different elements.

bluetooth alarm battery do not disturb Training plan to remind Stept count date The custom shortcut view: long press OK button to add or remove the view under the standby custom view.

The shortcut views includes the heart rate, step counting, VO2 Max, notice, calorie, lactic acid threshold, training program and the recovery time.

Long press UP button to open movement function: hiking, cross country race, mountain-eering,cycling, swimming, running, triathlon, walking ,marathon and indoor running.

Long press the DOWM button to open the tool function: Location, compass, Calendar, weather, environmental monitoring, StopWatch Timer, finding my phone.

Short press the OK button to enter the setting view: subject, time, movement record, custom tool, custom movement, accessory connection, system and about watch.

Positioning compass calendar weather environment stop-watch Looking for mobile phone

Hiking cross-country cross-country race Mountain-eering cycling swimming running triathlon

Example：Running Excercise

Long press the UP button to open the movement menu in the standby view of the wrist watch, choose outdoor running, preess OK to enter the motion track view, please wait for the location

successfully and then press OK to start the movement.

the wristwatch will record the track, mileage, time length, real-time rate, real-time heart rate, height of the cumulative rise and drop for running and so on. In the trace view, you can press the UP/DOWN button to switch for the sub-page view.

Press OK to pause the motion, display the pause time, and pop up the menu to continue, end, contiune later, trace the track or give up the movement. Choose the end movement to jump out

of the subjective sensory evaluation view, press UP/DOWN to select, press OK button to select and save movement records. After that automaticlly Jump to a detailed movement data view. press UP/DOWN to view all the detailed data and track

In the movement, press BACK key to pause the view amd return to view the movement data, press

BACK in the data view to return to the pause menu view again.

FCC WARNING:

This equipment has been tested and found to comply with the limits for a Class B digital device, pursuant to part 15 of the FCC Rules. These limits are designed to provide reasonable protection against harmful interference in a residential installation This equipment generates, uses and can radiate radio frequency energy and, if not installed and used in accordance with the instructions, may cause harmful interference to radio communications. However, there is no guarantee that interference will no occur in a particular installation. If this equipment does cause harmful interference to radio or television reception, which can be determined by turning the equipment off and on, the user is encouraged to try to correct the interference by one or more of the following measures

Reorient or relocate the receiving antenna.
Increase the separation between the equipment and receiver.
Connect the equipment into an outlet on a circuit different from that to which the receiver is connected
Consult the dealer or an experienced radio/TV technician for help

Caution: Any changes or modifications to this device not explicitly approved by manufacturer could void your authority to operate this equipmen
This device complies with part 15 of the FCC Rules. Operation is subject to the following two conditions: (1) This device may not cause harmful interference, and (2) this device must accept any interference received, including interference that may cause undesired operation
The device has been evaluated to meet general RF exposure requirement. The device can be used in portable exposure condition without restriction