TEST REPORT

Product Name : BRAVOMONSTER hall sensor Remote Controller
Model Number : HSRVC01
FCC ID : 2AZV7-HSRVC01

Prepared for : Beijing Dynamics Technology Co.,LTD
Address : Room 202, Floor 2, Building 23, No.2 North street Jingyuan, BDA, Beijing, China

Prepared by : EMTEK (SHENZHEN) CO., LTD.
Address : Building 69, Majialong Industry Zone, Nanshan District, Shenzhen, Guangdong, China

Tel: (0755) 26954280
Fax: (0755) 26954282

Report Number : ENS2401120182W00101R
Date(s) of Tests : January 12, 2024 to February 21, 2024
Date of issue : February 21, 2024

Table of Contents

1 TEST RESULT CERTIFICATION 3

2 EUT TECHNICAL DESCRIPTION 5

3 SUMMARY OF TEST RESULT 6

4 TEST METHODOLOGY 7

4.1 GENERAL DESCRIPTION OF APPLIED STANDARDS 7
4.2 MEASUREMENT EQUIPMENT USED 7
4.3 DESCRIPTION OF TEST MODES 9

5 FACILITIES AND ACCREDITATIONS 10

5.1 FACILITIES 10
5.2 LABORATORY ACCREDITATIONS AND LISTINGS 10

6 TEST SYSTEM UNCERTAINTY 11

7 SETUP OF EQUIPMENT UNDER TEST 12

7.1 RADIO FREQUENCY TEST SETUP 1 12
7.2 RADIO FREQUENCY TEST SETUP 2 12
7.3 CONDUCTED EMISSION TEST SETUP 14
7.4 SUPPORT EQUIPMENT 14

8 TEST REQUIREMENTS 15

8.1 BANDWIDTH TEST 15
8.2 RADIATED SPURIOUS EMISSION 18
8.3 CONDUCTED EMISSIONS TEST 30
8.4 ANTENNA APPLICATION 31

1 TEST RESULT CERTIFICATION

Applicant	:	Beijing Dynamics Technology Co.,LTD
Address	:	Room 202, Floor 2, Building 23, No.2 North street Jingyuan, BDA, Beijing, China
Manufacturer	:	Beijing Dynamics Technology Co.,LTD
Address	:	Room 202, Floor 2, Building 23, No.2 North street Jingyuan, BDA, Beijing, China
EUT	:	BRAVOMONSTER hall sensor Remote Controller
Model Name	:	HSRVC01
Trademark	:	BRAVOMONSTER

Measurement Procedure Used:

APPLICABLE STANDARDS	
STANDARD	**TEST RESULT**
FCC 47 CFR Part 2, Subpart J FCC 47 CFR Part 15, Subpart C	**PASS**
IC RSS-GEN, Issue 5, February 2021 IC RSS-210, Issue 10, April 2020	**PASS**

The above equipment was tested by EMTEK (SHENZHEN) CO., LTD. The test data, data evaluation, test procedures, and equipment configurations shown in this report were made in accordance with the procedures given in ANSI C63.10 (2013) and the energy emitted by the sample EUT tested as described in this report is in compliance with the requirements of FCC Rules Part 2, Part 15.249, IC RSS-210 Issue 10 and IC RSS-GEN, Issue 5.

The test results of this report relate only to the tested sample identified in this report

Date of Test : January 12, 2024 to February 3, 2024

Prepared by : Luo Pei Ye
Luo peiye /Editor

Reviewer : Joe Xia
Joe Xia /Supervisor

Approve & Authorized Signer : Lisa Wang/Manager

EMTEK (SHENZHEN) CO., LTD. TESTING

Modified Information

Version	Report No.	Revision Date	Summary
Ver.1.0	ENS2401120182W00101R	/	Original Report

2 EUT TECHNICAL DESCRIPTION

Product:	BRAVOMONSTER hall sensor Remote Controller
Model Number:	HSRVC01
Sample:	2#
Modulation:	GFSK
Frequency Range:	2410 MHz to 2468 MHz
Number of Channels:	30 channels
Max Transmit Power:	95.45 dBuV/m@3m
Antenna:	PCB Antenna
Antenna Gain:	0 dBi
Power supply:	DC 3V
Temperature Range:	Refer to manufacturer user manusal/operating manual

Note: for more details, please refer to the User's manual of the EUT.

3 SUMMARY OF TEST RESULT

FCC Part Clause	IC Part Clause	Test Parameter	Verdict	Remark
15.207	RSS-GEN Clause 8.8	Conducted Emission	N/A	
15.209	RSS-GEN Clause 8.9	Radiated Emission	PASS	
15.249	RSS-210 Annex B.10	Radiated Spurious Emission	PASS	
15.249	RSS-210 Annex B.10	Band edge test	PASS	
15.249	RSS-GEN Clause 6.7	20dB Bandwidth	PASS	
15.203	RSS-GEN Clause 6.8	Antenna Requirement	PASS	
NOTE1: N/A (Not Applicable) NOTE2: The report use radiated measurements in the restricted frequency bands. In addition, the radiated test is also performed to ensure the emissions emanating from the device cabinet also comply with the applicable limits.				

RELATED SUBMITTAL(S) / GRANT(S):

This submittal(s) (test report) is intended for **FCC ID: 2AZV7-HSRVC01** filing to comply with Section 15.249 of the FCC Part 15, Subpart C Rules.

4 TEST METHODOLOGY

4.1 GENERAL DESCRIPTION OF APPLIED STANDARDS

According to its specifications, the EUT must comply with the requirements of the following standards:
FCC 47 CFR Part 2, Subpart J
FCC 47 CFR Part 15, Subpart C
IC RSS-GEN, Issue 5
IC RSS-210, Issue 10

4.2 MEASUREMENT EQUIPMENT USED

4.2.1 Conducted Emission Test Equipment

Equipment	Manufacturer	Model No.	Serial No.	Last Cal.	Cal. Interval
EMI Test Receiver	Rohde & Schwarz	ESCI	101384	2023/5/13	1Year
AMN	Rohde & Schwarz	ENV216	101161	2023/5/13	1Year
AMN	Kyoritsu	KNW-407	8-1492-9	2023/5/11	1Year

4.2.2 Radiated Emission Test Equipment

Equipment	Manufacturer	Model No.	Serial No.	Last Cal.	Cal. Interval
Pre-Amplifier	Bonn	BLMA 011001N	2213967A	2022/10/31	1Year
EMI Test Receiver	Rohde & Schwarz	ESR7	102551	2022/10/31	1Year
Bilog Antenna	Schwarzbeck	VULB9163	9163142	2022/7/24	2 Year
Horn antenna	Schwarzbeck	BBHA9120D	9120D-1198	2023/6/2	2 Year
Pre-Amplifier	Bonn	BLMA 0118-5G	2213967B-01	2022/10/31	1Year
Spectrum Analyzer	Rohde & Schwarz	FSV3044	101290	2022/10/31	1Year
Horn antenna	Schwarzbeck	BBHA9170	9170-399	2023/5/12	2 Year
Pre-Amplifier	Lunar EM	LNA18G26-40	J1012131010001	2023/5/10	2 Year
Pre-Amplifier	Lunar EM	LNA26G40-40	J1013131028001	2023/5/10	1 Year
Loop Antenna	Schwarzbeck	FMZB1519	1519-012	2023/5/12	1 Year
Band reject Filter(50dB)	WI/DE	WRCGV-2400(2400-2485MHz)	2	2023/5/10	1 Year

4.2.3 Radio Frequency Test Equipment

Equipment	Manufacturer	Model No.	Serial No.	Last Cal.	Cal. Interval
Signal Analyzer	Agilent	N9010A	MY53470879	2023/5/10	1Year
Vector Signal Generater	Agilent	N5182B	MY53050878	2023/5/10	1Year
Analog Signal Generator	Agilent	N5171B	MY53050553	2023/5/10	1Year
Power Meter	Agilent	PS-X10-100	\	2023/5/13	1Year
Switchgroup	THEDA	ETF-025(VASC6)	TW5451008	N/A	N/A

MIMO Matrix Switch	THEDA	4P5TM18	TW5451009	N/A	N/A
Temperature&Humidity Chamber	ESPEC	EL-02KA	12107166	2023/5/10	1Year

4.3 DESCRIPTION OF TEST MODES

The EUT has been tested under its typical operating condition.
The EUT configuration for testing is installed on RF field strength measurement to meet the Commissions requirement and operating in a manner which intends to maximize its emission characteristics in a continuous normal application.
The Transmitter was operated in the normal operating mode. The TX frequency was fixed which was for the purpose of the measurements.

Those data rates (GFSK) were used for all test.

Pre-defined engineering program for regulatory testing used to control the EUT for staying in continuous transmitting and receiving mode is programmed.

Frequency and Channel list:

Channel	Frequency (MHz)	Channel	Frequency (MHz)	Channel	Frequency (MHz)
1	2410	2	2412	3	2414
4	2416	5	2418	6	2420
7	2422	8	2424	9	2426
10	2428	11	2430	12	2432
13	2434	14	2436	15	2438
16	2440	17	2442	18	2444
19	2446	20	2448	21	2450
22	2452	23	2454	24	2456
25	2458	26	2460	27	2462
28	2464	29	2466	30	2468

Test Frequency and Channel list:

Lowest Frequency		Middle Frequency		Highest Frequency	
Channel	Frequency (MHz)	Channel	Frequency (MHz)	Channel	Frequency (MHz)
1	2410	16	2440	30	2468

5 FACILITIES AND ACCREDITATIONS

5.1 FACILITIES

All measurement facilities used to collect the measurement data are located at

Building 69, Majialong Industry Zone District, Nanshan District, Shenzhen, China
The sites are constructed in conformance with the requirements of ANSI C63.7, ANSI C63.10 and CISPR Publication 22.

5.2 LABORATORY ACCREDITATIONS AND LISTINGS

Site Description		
EMC Lab.	:	**Accredited by CNAS** The Certificate Registration Number is L2291. The Laboratory has been assessed and proved to be in compliance with CNAS-CL01 (identical to ISO/IEC 17025:2017) **Accredited by FCC** Designation Number: CN1204 Test Firm Registration Number: 882943 **Accredited by A2LA** The Certificate Number is 4321.01. **Accredited by Industry Canada** The Conformity Assessment Body Identifier is CN0008
Name of Firm	:	EMTEK (SHENZHEN) CO., LTD.
Site Location	:	Building 69, Majialong Industry Zone, Nanshan District, Shenzhen, Guangdong, China

6 TEST SYSTEM UNCERTAINTY

The following measurement uncertainty levels have been estimated for tests performed on the apparatus:

Parameter	Uncertainty
Radio Frequency	±1x10^-5
Maximum Peak Output Power Test	±1.0dB
Conducted Emissions Test	±2.0dB
Radiated Emission Test	±2.0dB
Occupied Bandwidth Test	±1.0dB
Band Edge Test	±3dB
All emission, radiated	±3dB
Antenna Port Emission	±3dB
Temperature	±0.5℃
Humidity	±3%

Measurement Uncertainty for a level of Confidence of 95%

7 SETUP OF EQUIPMENT UNDER TEST

7.1 RADIO FREQUENCY TEST SETUP 1

The EUT wireless component's antenna ports(s) of the EUT are connected to the measurement instrument per an appropriate attenuator. The EUT is controlled by PC/software to emit the specified signals for the purpose of measurements.

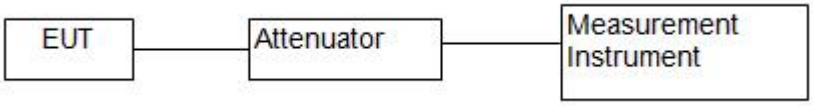

7.2 RADIO FREQUENCY TEST SETUP 2

The test site semi-anechoic chamber has met the requirement of NSA tolerance 4 dB according to the standards: ANSI C63.10. The test distance is 3m.The setup is according to the requirements in Section 13.1.4.1 of ANSI C63.10-2013 and CAN/CSA-CEI/IEC CISPR 22.

Below 30MHz：

The EUT is placed on a turntable 0.8 meters above the ground in the chamber, 3 meter away from the antenna (loop antenna). The Antenna should be positioned with its plane vertical at the specified distance from the EUT and rotated about its vertical axis for maximum response at each azimuth about the EUT. The center of the loop shall be 1 m above the ground. For certain applications, the loop antenna plane may also need to be positioned horizontally at the specified distance from the EUT.

30MHz-1GHz：

The EUT is placed on a turntable 0.8 meters above the ground in the chamber, 3 meter away from the antenna. The maximal emission value is acquired by adjusting the antenna height, polarisation and turntable azimuth. Normally, the height range of antenna is 1 m to 4 m, the azimuth range of turntable is 0° to 360°, and the receive antenna has two polarizations Vertical (V) and Horizontal (H).

Above 1GHz：

The EUT is placed on a turntable 1.5 meters above the ground in the chamber, 3 meter away from the antenna. The maximal emission value is acquired by adjusting the antenna height, polarisation and turntable azimuth. Normally, the height range of antenna is 1 m to 4 m, the azimuth range of turntable is 0° to 360°, and the receive antenna has two polarizations Vertical (V) and Horizontal (H).

(a) Radiated Emission Test Set-Up, Frequency Below 30MHz

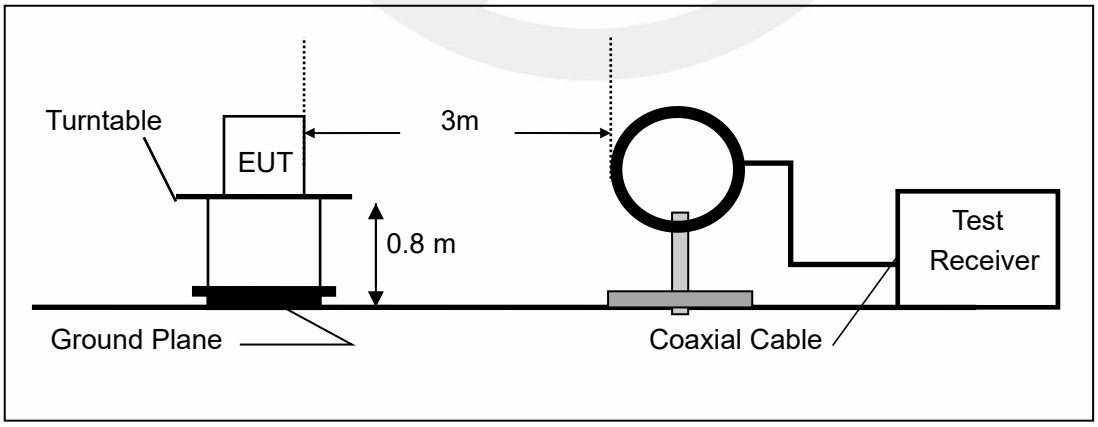

(b) Radiated Emission Test Set-Up, Frequency Below 1000MHz

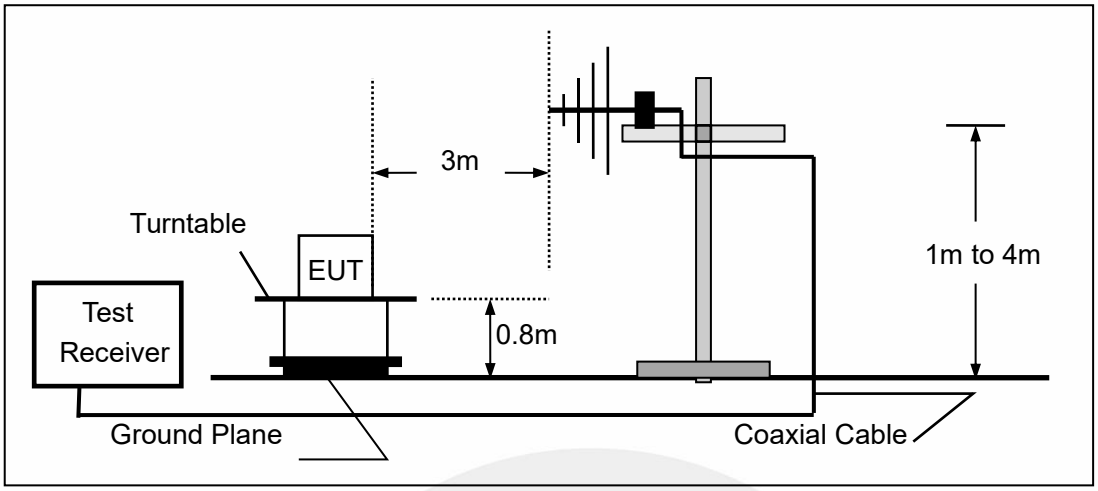

(c) Radiated Emission Test Set-Up, Frequency above 1000MHz

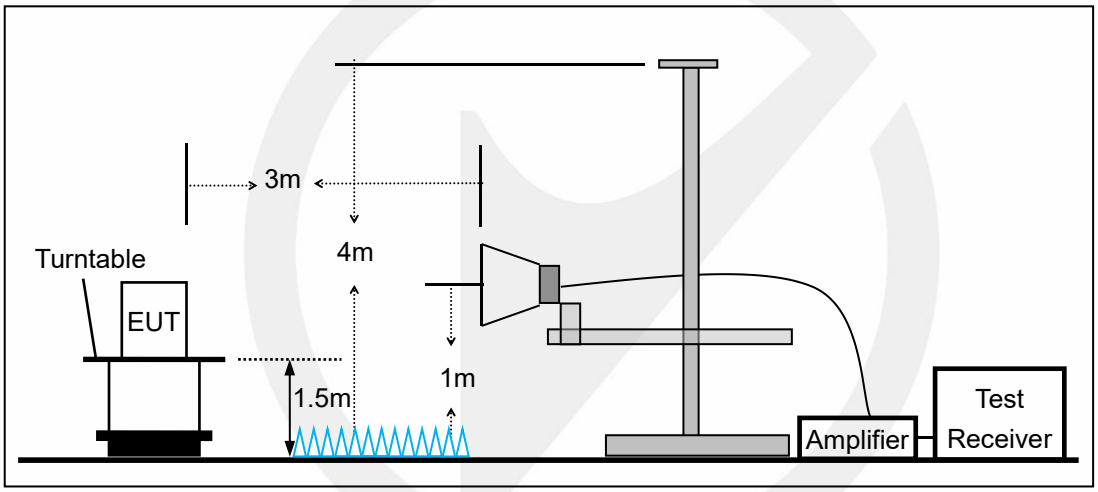

7.3 CONDUCTED EMISSION TEST SETUP

The mains cable of the EUT (maybe per AC/DC Adapter) must be connected to LISN. The LISN shall be placed 0.8 m from the boundary of EUT and bonded to a ground reference plane for LISN mounted on top of the ground reference plane. This distance is between the closest points of the LISN and the EUT. All other units of the EUT and associated equipment shall be at least 0.8m from the LISN.
Ground connections, where required for safety purposes, shall be connected to the reference ground point of the LISN and, where not otherwise provided or specified by the manufacturer, shall be of same length as the mains cable and run parallel to the mains connection at a separation distance of not more than 0.1 m.
According to the requirements in Section 13.1.4.1 of ANSI C63.10-2013 Conducted emissions from the EUT measured in the frequency range between 0.15 MHz and 30 MHz using CISPR Quasi-Peak and average detector mode.

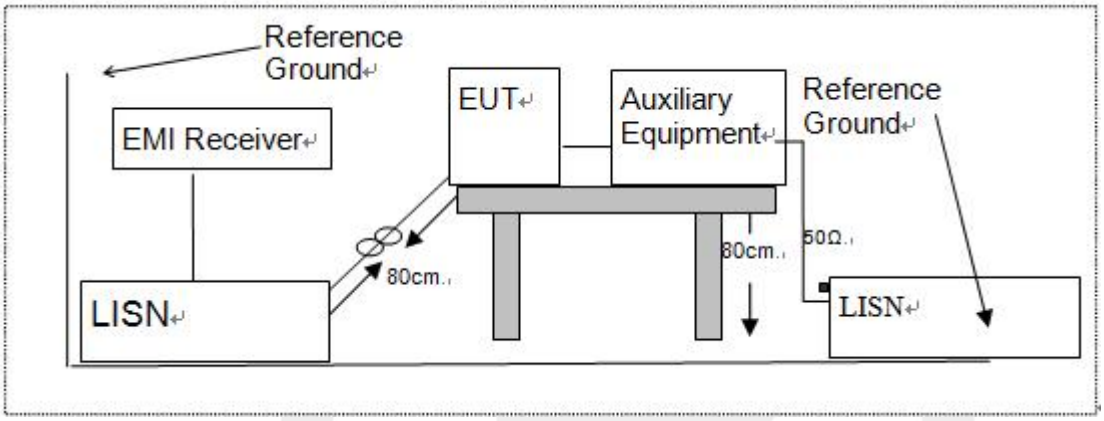

7.4 SUPPORT EQUIPMENT

EUT Cable List and Details			
Cable Description	Length (m)	Shielded/Unshielded	With / Without Ferrite
/	/	/	/

Auxiliary Cable List and Details			
Cable Description	Length (m)	Shielded/Unshielded	With / Without Ferrite
/	/	/	/

Auxiliary Equipment List and Details			
Description	Manufacturer	Model	Serial Number
/	/	/	/

Notes:

1. *All the equipment/cables were placed in the worst-case configuration to maximize the emission during the test.*
2. *Grounding was established in accordance with the manufacturer's requirements and conditions for the intended use.*

8 TEST REQUIREMENTS

8.1 BANDWIDTH TEST

8.1.1 Applicable Standard

According to FCC Part 15.249
According to RSS-GEN Clause 6.7

8.1.2 Conformance Limit

N/A

8.1.3 Test Configuration

Test according to clause 7.1 radio frequency test setup 1

8.1.4 Test Procedure

The EUT was operating in controlled its channel. Printed out the test result from the spectrum by hard copy function.
The RF output of EUT was connected to the spectrum analyzer by RF cable and attenuator. The path loss was compensated to the results for each measurement.
Set to the maximum power setting and enable the EUT transmit continuously
Set RBW ≥ 1% of the 20 dB bandwidth
Set the video bandwidth (VBW) ≥ RBW
Set Span= approximately 2 to 3 times the 20 dB bandwidth
Set Detector = Peak.
Set Trace mode = max hold.
Set Sweep = auto couple.
Measure the maximum width of the emission that is constrained by the frequencies associated with the two outermost amplitude points (upper and lower frequencies) that are attenuated by 20 dB relative to the maximum level measured in the fundamental emission.
Use measurement function measure 99% Bandwidth.
Measure and record the results in the test report.

Test Results

Temperature:	22° C
Relative Humidity:	53%
ATM Pressure:	1011 mbar

Operation Mode	Channel Frequency (MHz)	20db Measurement Bandwidth (MHz)	99% Measurement Bandwidth (MHz)	Limit (kHz)	Verdict
GFSK	2410	1.724	2.6281	N/A	PASS
	2440	0.7849	1.4211	N/A	PASS
	2468	0.7881	1.1326	N/A	PASS
Note: N/A (Not Applicable)					

Test Model	20dB &99% Occupied Bandwidth GFSK Channel : 2410MHz

Test Model	20dB &99% Occupied Bandwidth GFSK Channel : 2440MHz

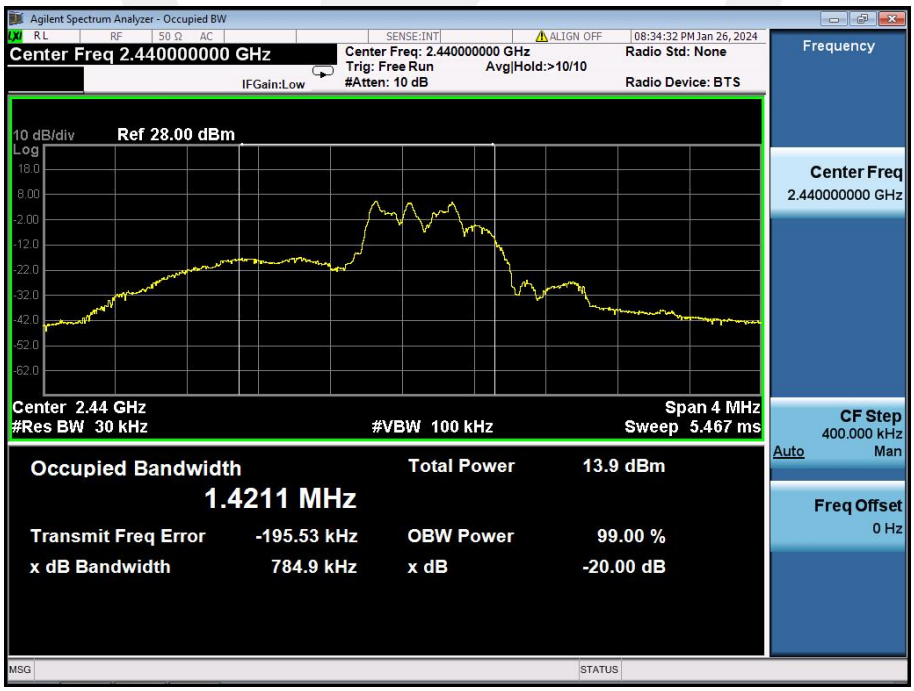

Test Model	20dB &99% Occupied Bandwidth GFSK Channel : 2468MHz

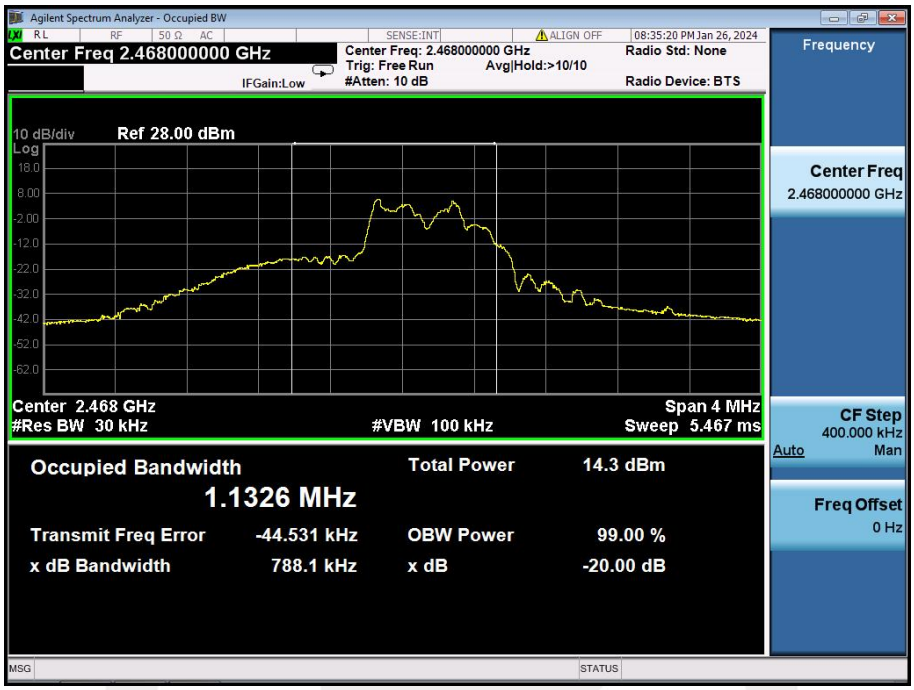

8.2 RADIATED SPURIOUS EMISSION

8.2.1 Applicable Standard

According to FCC Part 15.249 and 15.209
According to RSS-210 Annex B.10 and RSS-GEN Clause 8.9

8.2.2 Conformance Limit

According to FCC Part 15.249: radiated emissions which fall in the restricted bands, as defined in §15.205(a), must also comply with the radiated emission limits specified in §15.209(a) (see §15.205(c)).
According to FCC Part15.205, Restricted bands

MHz	MHz	MHz	GHz
0.090-0.110	16.42-16.423	399.9-410	4.5-5.15
10.495-0.505	16.69475-16.69525	608-614	5.35-5.46
2.1735-2.1905	16.80425-16.80475	960-1240	7.25-7.75
4.125-4.128	25.5-25.67	1300-1427	8.025-8.5
4.17725-4.17775	37.5-38.25	1435-1626.5	9.0-9.2
4.20725-4.20775	73-74.6	1645.5-1646.5	9.3-9.5
6.215-6.218	74.8-75.2	1660-1710	10.6-12.7
6.26775-6.26825	123-138	2200-2300	14.47-14.5
8.291-8.294	149.9-150.05	2310-2390	15.35-16.2
8.362-8.366	156.52475-156.52525	2483.5-2500	17.7-21.4
8.37625-8.38675	156.7-156.9	2690-2900	22.01-23.12
8.41425-8.41475	162.0125-167.17	3260-3267	23.6-24.0
12.29-12.293	167.72-173.2	3332-3339	31.2-31.8
12.51975-12.52025	240-285	3345.8-3358	36.43-36.5
12.57675-12.57725	322-335.4	3600-4400	(2)
13.36-13.41			

According to FCC Part15.205, the level of any transmitter spurious emission in Restricted bands shall not exceed the level of the emission specified in the following table

Restricted Frequency(MHz)	Field Strength (μV/m)	Field Strength (dBμV/m)	Measurement Distance
0.009-0.490	2400/F(KHz)	20 log (uV/m)	300
0.490-1.705	24000/F(KHz)	20 log (uV/m)	30
1.705-30	30	29.5	30
30-88	100	40	3
88-216	150	43.5	3
216-960	200	46	3
Above 960	500	54	3

Remark :1. Emission level in dBuV/m=20 log (uV/m)
2. Measurement was performed at an antenna to the closed point of EUT distance of meters.
3. Distance extrapolation factor =40log(Specific distance/ test distance)(dB);
Limit line=Specific limits(dBuV) + distance extrapolation factor.
for the frequency ranges below 30 MHz, a narrower RBW is used for these ranges but the measured value should add a RBW correction factor (RBWCF) where RBWCF [dB] =10*lg(100 [kHz]/narrower RBW [kHz]). , the narrower RBW is 1 kHz and RBWCF is 20 dB for the frequency 9 kHz to 150 kHz, and the narrower RBW is 10 kHz and RBWCF is 10 dB for the frequency 150 kHz to 30 MHz.

Field strength of fundamental and Field strength of harmonics Limit:

Fundamental frequency	Field strength of fundamental (millivolts/meter)	Field strength of harmonics (microvolts/meter)
902-928 MHz	50(94 dBuV/m)	500(54 dBuV/m)
2400-2483.5 MHz	50(94 dBuV/m)	500(54 dBuV/m)
5725-5875 MHz	50(94 dBuV/m)	500(54 dBuV/m)
24.0-24.25 GHz	250(108 dBuV/m)	2500(68 dBuV/m)

As shown in §15.35(b), for frequencies above 1000 MHz, the field strength limits in paragraphs (a) and (b) of this section are based on average limits. However, the peak field strength of any emission shall not exceed the maximum permitted average limits specified above by more than 20 dB under any condition of modulation

For this report

Fundamental Frequency	Field Strength Of Fundamental	Field Strength of Spurious Emissions
2400-2483.5 MHz	AV:94 dBuV/m at 3m distance	AV:54 dBuV/m at 3m distance
	PK:114 dBuV/m at 3m distance	PK:74 dBuV/m at 3m distance

8.2.3 Test Configuration

Test according to clause 7.2 radio frequency test setup 2

8.2.4 Test Procedure

This test is required for any spurious emission that falls in a Restricted Band, as defined in Section 15.205. It must be performed with the highest gain of each type of antenna proposed for use with the EUT. Use the following spectrum analyzer settings:
The EUT was placed on a turn table which is 0.8m above ground plane.
Maximum procedure was performed on the highest emissions to ensure EUT compliance.
Span = wide enough to fully capture the emission being measured
RBW = 1 MHz for f ≥ 1 GHz(1GHz to 25GHz), 100 kHz for f < 1 GHz(30MHz to 1GHz)
VBW ≥ RBW
Sweep = auto
Detector function = peak
Trace = max hold
Follow the guidelines in ANSI C63.10-2013 with respect to maximizing the emission by rotating the EUT, measuring the emission while the EUT is situated in three orthogonal planes (if appropriate), adjusting the measurement antenna height and polarization, etc. A pre-amp and a high pass filter are required for this test, in order to provide the measuring system with sufficient sensitivity. Allow the trace to stabilize. The peak reading of the emission, after being corrected by the antenna factor, cable loss, pre-amp gain, etc., is the peak field strength, which must comply with the limit specified in Section 15.35(b). Submit this data.
Now set the VBW to 10 Hz, while maintaining all of the other instrument settings. This peak level, once corrected, must comply with the limit specified in Section 15.209. If the dwell time per channel of the hopping signal is less than 100 ms, then the reading obtained with the 10 Hz VBW may be further adjusted by a “duty cycle correction factor”, derived from 20log(dwell time/100 ms), in an effort to demonstrate compliance with the 15.209 limit. Submit this data.
Repeat above procedures until all frequency measured was complete.

8.2.5 Test Results

Temperature:	24° C
Relative Humidity:	53%
ATM Pressure:	1011 mbar

■ Spurious Emission below 30MHz (9KHz to 30MHz)

Freq. (MHz)	Ant.Pol. H/V	Emission Level(dBuV/m)		Limit 3m(dBuV/m)		Over(dB)	
		PK	AV	PK	AV	PK	AV
--	--	--	--	--	--	--	--

Note: the amplitude of spurious emission that is attenuated by more than 20dB below the permissible limit has no need to be reported.
Distance extrapolation factor =40log(Specific distance/ test distance)(dB);
Limit line=Specific limits(dBuV) + distance extrapolation factor

■ Field Strength of the fundamental signal
All the antenna(Antenna 1) and modes(GFSK) mode have been tested, and the worst(Antenna 1,GFSK) resultrecorded was report as below:

Freq. (MHz)	Ant.Pol. H/V	Emission Level(dBuV/m)		Limit 3m(dBuV/m)		Over(dB)	
		PK	AV	PK	AV	PK	AV
2410	V	87.21	84.65	114	94	-26.79	-9.35
2410	H	95.45	91.67	114	94	-18.55	-2.33
2440	V	87.29	85.15	114	94	-26.71	-8.85
2440	H	95.35	91.09	114	94	-18.65	-2.91
2468	V	87.22	83.99	114	94	-26.78	-10.01
2468	H	95.15	91.43	114	94	-18.85	-2.57

Note: (1) Correct Factor= Antenna Factor +Cable Loss- Amplifier Gain
(2) Emission Level= Reading Level+Probe Factor +Cable Loss

■ Out of Band Emissions
All the antenna(Antenna 1) and modes(GFSK) mode have been tested, and the worst(Antenna 1,GFSK) resultrecorded was report as below:

Test mode: GFSK Frequency: Channel : 2410MHz

Frequency (MHz)	Polarity	PK(dBuV/m) (VBW=3MHz)	Limit 3m (dBuV/m)	Over(dB)	AV(dBuV/m) (VBW=10Hz)	Limit 3m (dBuV/m)	Over(dB)
2483.84	V	45.48	74	-28.52	28.52	54	-15.68
2387.70	H	44.13	74	-29.87	37.36	54	-16.64

Test mode: GFSK Frequency: Channel : 2468MHz

Frequency (MHz)	Polarity	PK(dBuV/m) (VBW=3MHz)	Limit 3m (dBuV/m)	Over(dB)	AV(dBuV/m) (VBW=10Hz)	Limit 3m (dBuV/m)	Over(dB)
2483.84	V	45.03	74	-28.97	34.31	54	-19.69
2483.52	H	45.58	74	-28.42	35.19	54	-18.81

Note: (1) All Readings are Peak Value (VBW=3MHz) and Peak Value (VBW=10Hz).
(2) Emission Level= Reading Level+Correct Factor +Cable Loss.
(3) Correct Factor= Ant_F + Cab_L - Preamp
(4)Data of measurement within this frequency range shown " -- " in the table above means the reading of emissions are attenuated more than 20dB below the permissible limits or the field strength is too small to be measured.

Test Model	Band Emissions Low Test By: XZC	GFSK	V

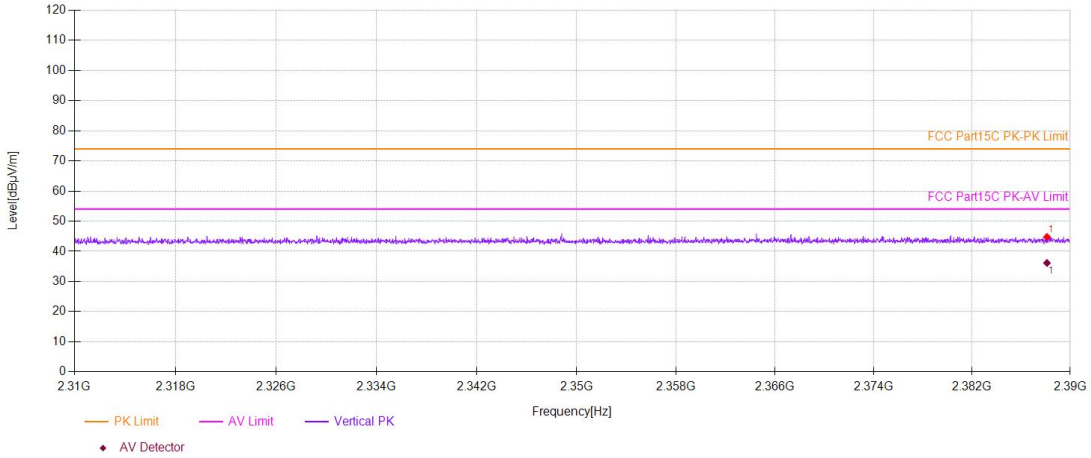

Test Model	Band Emissions Low Test By: XZC	GFSK	H

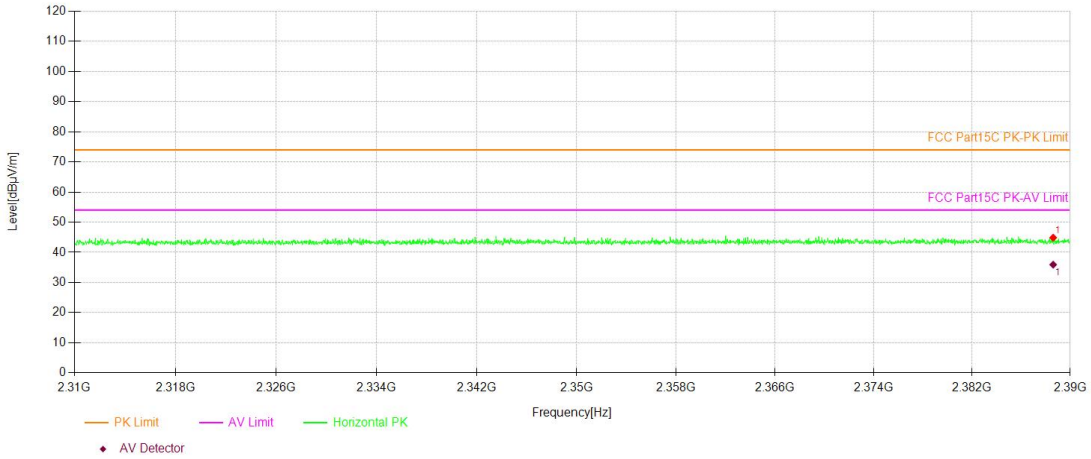

Test Model	Band Emissions High Test By: XZC	GFSK	V

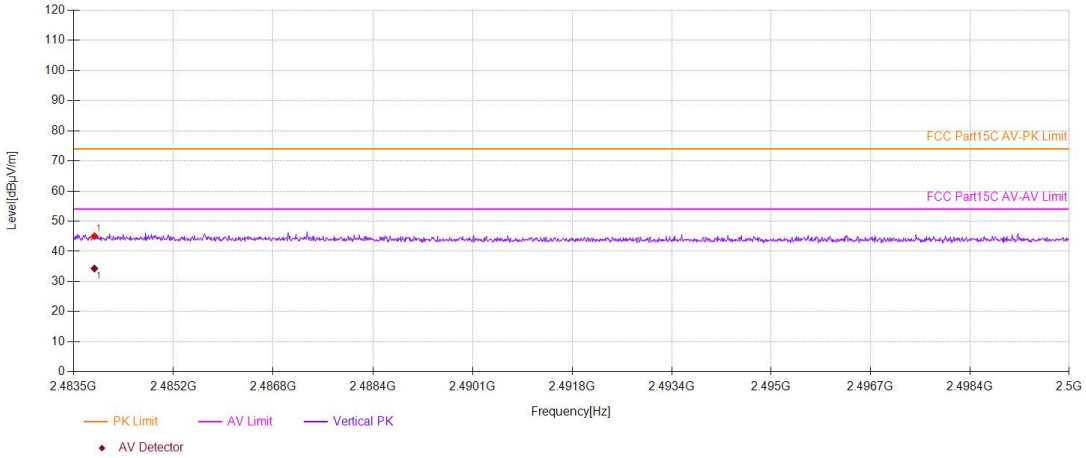

Test Model	Band Emissions High Test By: XZC	GFSK	H

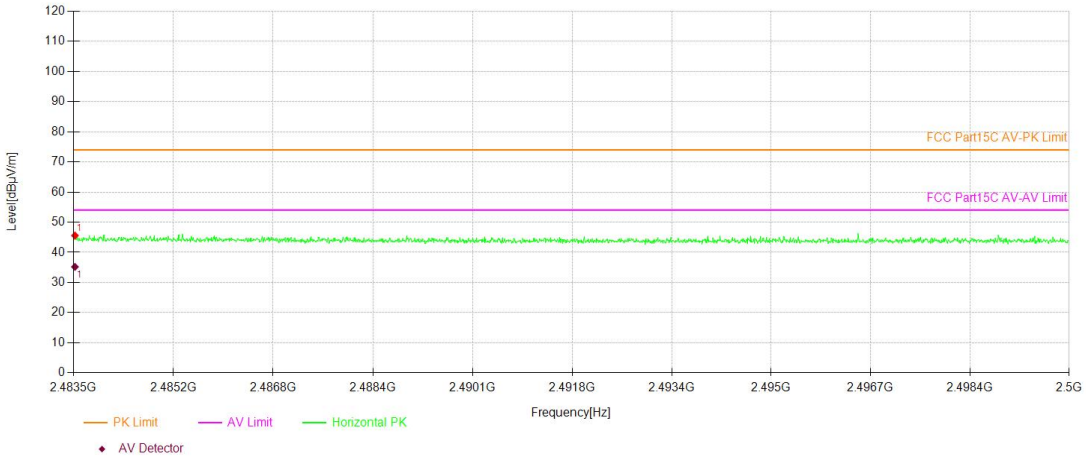

■ Spurious Emission Above 1GHz (1GHz to 25GHz)
All the antenna(Antenna 1) and modes(GFSK) mode have been tested, and the worst(Antenna 1,GFSK) resultrecorded was report as below:

Test mode: GFSK Frequency: Channel : 2410MHz

Freq. (MHz)	Ant.Pol. H/V	Emission Level(dBuV/m) PK	Emission Level(dBuV/m) AV	Limit 3m(dBuV/m) PK	Limit 3m(dBuV/m) AV	Over(dB) PK	Over(dB) AV
11491.87	V	59.66	47.59	74	54	-14.34	-6.41
14591.25	V	62.72	47.05	74	54	-11.28	-6.95
17968.12	V	66.95	44.44	74	54	-7.05	-9.56
11521.87	H	60.62	47.14	74	54	-13.38	-6.86
14608.12	H	63.38	47.13	74	54	-10.62	-6.87
17608.12	H	68.35	46.94	74	54	-5.65	-7.06

Test mode: GFSK Frequency: Channel : 2440MHz

Freq. (MHz)	Ant.Pol. H/V	Emission Level(dBuV/m) PK	Emission Level(dBuV/m) AV	Limit 3m(dBuV/m) PK	Limit 3m(dBuV/m) AV	Over(dB) PK	Over(dB) AV
11385	V	60.03	46.39	74	54	-13.97	-7.61
14634.37	V	62.66	46.53	74	54	-11.34	-7.47
17628.75	V	67.14	46.33	74	54	-6.86	-7.67
11428.12	H	60.10	46.56	74	54	-13.90	-7.44
14643.75	H	62.80	46.33	74	54	-11.20	-7.67
17602.5	H	66.89	47.58	74	54	-7.11	-6.42

Test mode: GFSK Frequency: Channel : 2468MHz

Freq. (MHz)	Ant.Pol. H/V	Emission Level(dBuV/m) PK	Emission Level(dBuV/m) AV	Limit 3m(dBuV/m) PK	Limit 3m(dBuV/m) AV	Over(dB) PK	Over(dB) AV
11538.75	V	59.87	46.75	74	54	-14.13	-7.25
14578.12	V	63.53	46.66	74	54	-10.47	-7.34
17598.75	V	67.75	47.66	74	54	-6.25	-6.34
11506.87	H	59.84	47.53	74	54	-14.16	-14.16
14688.75	H	62.83	45.03	74	54	-11.17	-11.17
17606.25	H	66.66	47.47	74	54	-7.34	-7.34

Note: (1) All Readings are Peak Value (VBW=3MHz) and Peak Value (VBW=10Hz).
(2) Emission Level= Reading Level+Correct Factor +Cable Loss.
(3) Correct Factor= Ant_F + Cab_L - Preamp
(4)Data of measurement within this frequency range shown " -- " in the table above means the reading of emissions are attenuated more than 20dB below the permissible limits or the field strength is too small to be measured.

■ Spurious Emission below 1GHz (30MHz to 1GHz)

All the antenna(Antenna 1) and modes(GFSK) mode have been tested, and the worst(Antenna 1,GFSK) resultrecorded was report as below:

Mode:	2410

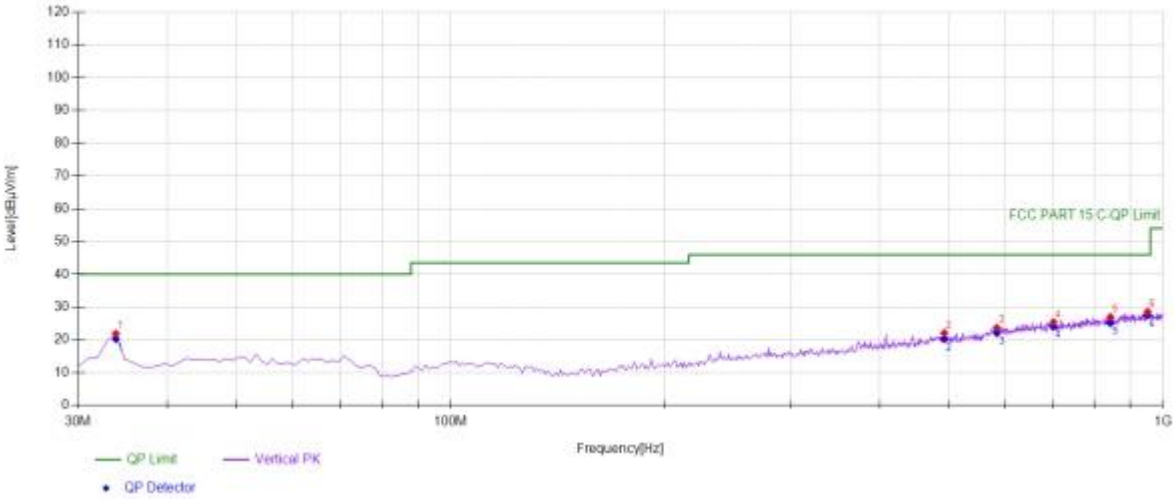

Suspected Data List								
NO.	Freq. [MHz]	Reading [dBμV]	Factor [dB/m]	Level [dBμV/m]	Detector	Limit [dBμV/m]	Margin [dB]	Polarity
1	33.8839	40.19	-18.29	21.90	PK	40.00	18.10	Vertical
2	493.1532	31.86	-9.79	22.07	PK	46.00	23.93	Vertical
3	584.4244	30.81	-7.14	23.67	PK	46.00	22.33	Vertical
4	701.9119	31.32	-5.92	25.40	PK	46.00	20.60	Vertical
5	843.6737	30.82	-3.84	26.98	PK	46.00	19.02	Vertical
6	951.4515	30.86	-2.32	28.54	PK	46.00	17.46	Vertical

Mode:	2410

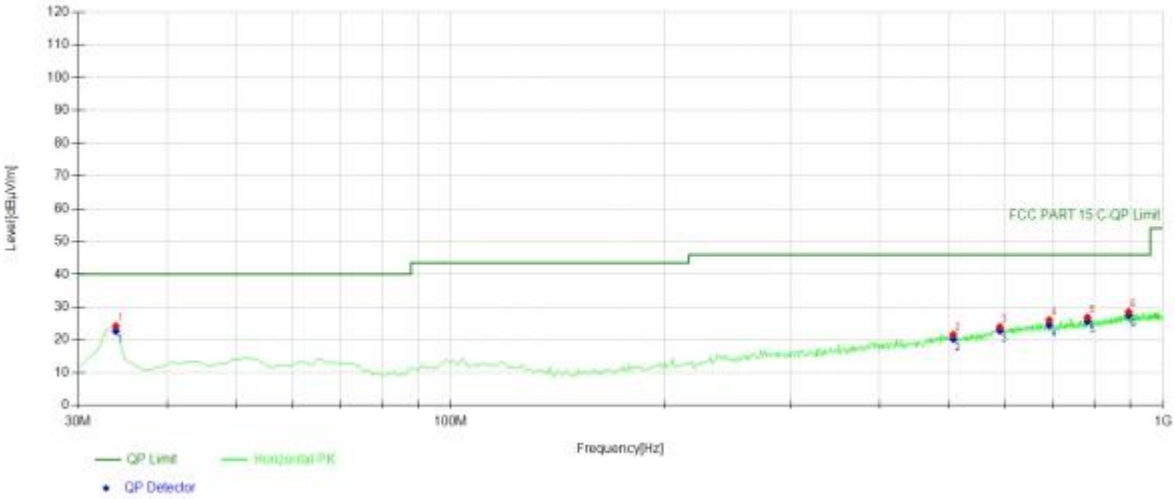

Suspected Data List								
NO.	Freq. [MHz]	Reading [dBµV]	Factor [dB/m]	Level [dBµV/m]	Detector	Limit [dBµV/m]	Margin [dB]	Polarity
1	33.8839	42.49	-18.29	24.20	PK	40.00	15.80	Horizontal
2	507.7177	31.35	-9.78	21.57	PK	46.00	24.43	Horizontal
3	590.2503	31.09	-7.14	23.95	PK	46.00	22.05	Horizontal
4	692.2022	32.01	-6.01	26.00	PK	46.00	20.00	Horizontal
5	783.4735	31.44	-4.59	26.85	PK	46.00	19.15	Horizontal
6	895.1351	31.35	-2.84	28.51	PK	46.00	17.49	Horizontal

Mode:	2440

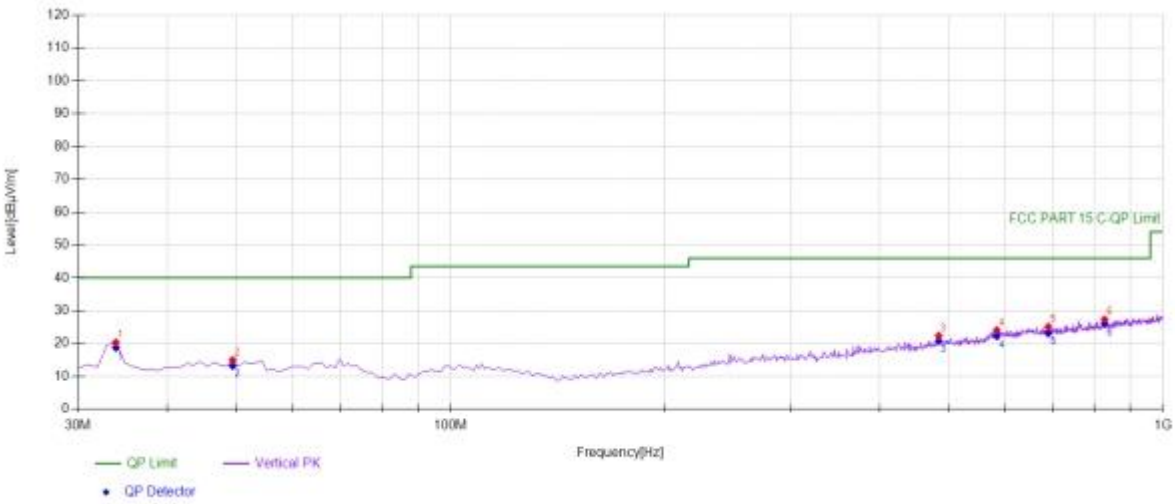

Suspected Data List								
NO.	Freq. [MHz]	Reading [dBµV]	Factor [dB/m]	Level [dBµV/m]	Detector	Limit [dBµV/m]	Margin [dB]	Polarity
1	33.8839	38.63	-18.29	20.34	PK	40.00	19.66	Vertical
2	49.4194	32.23	-17.25	14.98	PK	40.00	25.02	Vertical
3	484.4144	32.14	-9.79	22.35	PK	46.00	23.65	Vertical
4	584.4244	31.21	-7.14	24.07	PK	46.00	21.93	Vertical
5	690.2603	31.14	-6.03	25.11	PK	46.00	20.89	Vertical
6	828.1381	31.47	-4.15	27.32	PK	46.00	18.68	Vertical

Mode:	2440

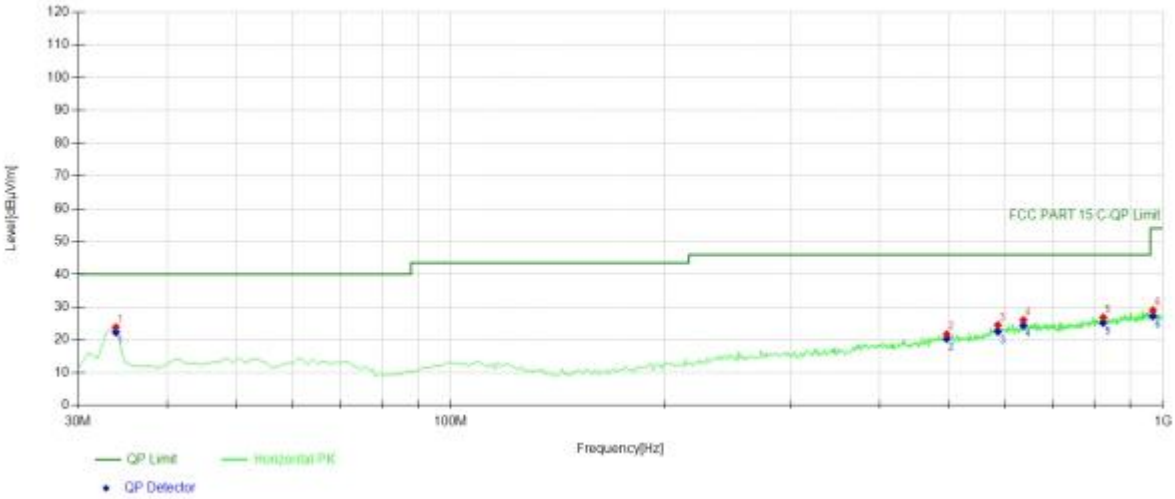

Suspected Data List								
NO.	Freq. [MHz]	Reading [dBµV]	Factor [dB/m]	Level [dBµV/m]	Detector	Limit [dBµV/m]	Margin [dB]	Polarity
1	33.8839	42.14	-18.29	23.85	PK	40.00	16.15	Horizontal
2	497.037	31.43	-9.77	21.66	PK	46.00	24.34	Horizontal
3	586.3664	31.62	-7.14	24.48	PK	46.00	21.52	Horizontal
4	636.8569	32.45	-6.41	26.04	PK	46.00	19.96	Horizontal
5	824.2543	31.03	-4.21	26.82	PK	46.00	19.18	Horizontal
6	967.958	31.07	-2.08	28.99	PK	54.00	25.01	Horizontal

Mode:	2468

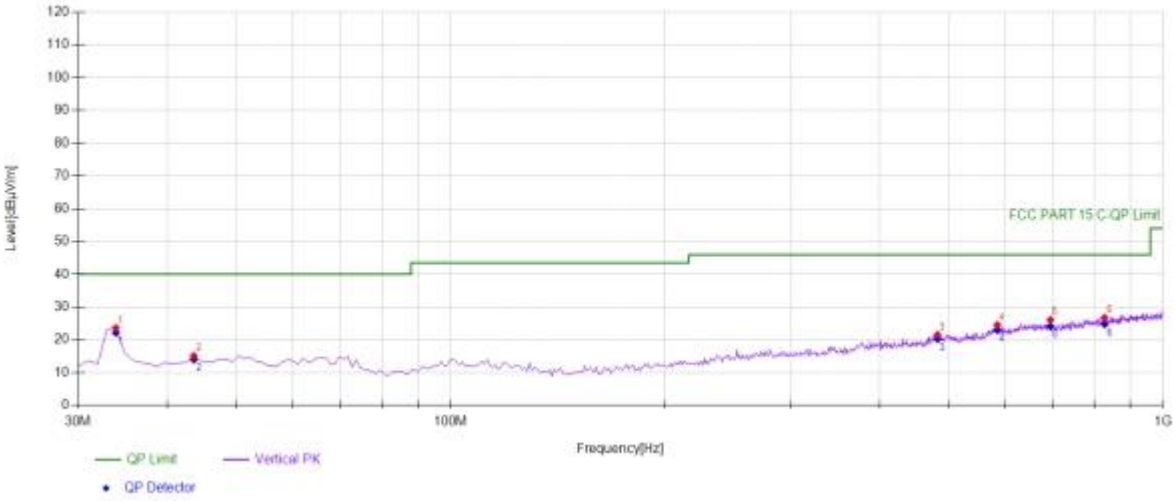

Suspected Data List								
NO.	Freq. [MHz]	Reading [dBμV]	Factor [dB/m]	Level [dBμV/m]	Detector	Limit [dBμV/m]	Margin [dB]	Polarity
1	33.8839	41.91	-18.29	23.62	PK	40.00	16.38	Vertical
2	43.5936	32.75	-17.66	15.09	PK	40.00	24.91	Vertical
3	482.4725	31.28	-9.78	21.50	PK	46.00	24.50	Vertical
4	585.3954	31.64	-7.14	24.50	PK	46.00	21.50	Vertical
5	695.1151	32.06	-5.98	26.08	PK	46.00	19.92	Vertical
6	828.1381	30.87	-4.15	26.72	PK	46.00	19.28	Vertical

Mode:	2468

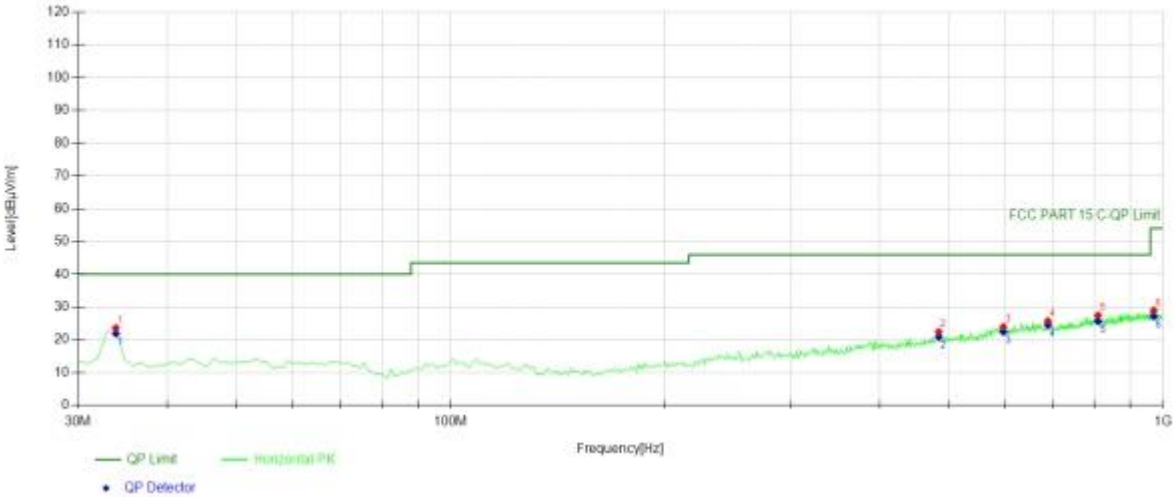

Suspected Data List								
NO.	Freq. [MHz]	Reading [dBµV]	Factor [dB/m]	Level [dBµV/m]	Detector	Limit [dBµV/m]	Margin [dB]	Polarity
1	33.8839	41.92	-18.29	23.63	PK	40.00	16.37	Horizontal
2	484.4144	32.25	-9.79	22.46	PK	46.00	23.54	Horizontal
3	597.047	31.10	-7.14	23.96	PK	46.00	22.04	Horizontal
4	689.2893	31.76	-6.03	25.73	PK	46.00	20.27	Horizontal
5	810.6607	31.83	-4.34	27.49	PK	46.00	18.51	Horizontal
6	970.8709	30.96	-2.01	28.95	PK	54.00	25.05	Horizontal

8.3 CONDUCTED EMISSIONS TEST

8.3.1 Applicable Standard

According to FCC Part 15.207(a)
RSS-GEN Clause 8.8

8.3.2 Conformance Limit

Conducted Emission Limit		
Frequency(MHz)	Quasi-peak	Average
0.15-0.5	66-56	56-46
0.5-5.0	56	46
5.0-30.0	60	50

Note: 1. The lower limit shall apply at the transition frequencies
2. The limit decreases in line with the logarithm of the frequency in the range of 0.15 to 0.50MHz.

8.3.3 Test Configuration

Test according to clause 7.3 conducted emission test setup

8.3.4 Test Procedure

The EUT was placed on a table which is 0.8m above ground plane.
Maximum procedure was performed on the highest emissions to ensure EUT compliance.
Repeat above procedures until all frequency measured were complete.

8.3.5 Test Results

N/A

8.4 ANTENNA APPLICATION

8.4.1 Antenna Requirement

Standard	Requirement
FCC CRF Part 15.203	An intentional radiator shall be designed to ensure that no antenna other than that furnished by the responsible party shall be used with the device. The use of a permanently attached antenna or of an antenna that uses a unique coupling to the intentional radiator shall be considered sufficient to comply with the provisions of this section. The manufacturer may design the unit so that a broken antenna can be replaced by the user, but the use of a standard antenna jack or electrical connector is prohibited. This requirement does not apply to carrier current devices or to devices operated under the provisions of §15.211, §15.213, §15.217, §15.219, or §15.221. Further, this requirement does not apply to intentional radiators that must be professionally installed, such as perimeter protection systems and some field disturbance sensors, or to other intentional radiators which, in accordance with §15.31(d), must be measured at the installation site. However, the installer shall be responsible for ensuring that the proper antenna is employed so that the limits in this part are not exceeded.
RSS-GEN Clause 6.8	An intentional radiator shall be designed to ensure that no antenna other than that furnished by the responsible party shall be used with the device. The use of a permanently attached antenna or of an antenna that uses a unique coupling to the intentional radiator shall be considered sufficient to comply with the provisions of this section. The manufacturer may design the unit so that a broken antenna can be replaced by the user, but the use of a standard antenna jack or electrical connector is prohibited. This requirement does not apply to carrier current devices or to devices operated under the provisions of RSS-GEN Clause 6.8. Further, this requirement does not apply to intentional radiators that must be professionally installed, such as perimeter protection systems and some field disturbance sensors, or to other intentional radiators which, in accordance with RSS-GEN Clause 6.8, must be measured at the installation site. However, the installer shall be responsible for ensuring that the proper antenna is employed so that the limits in this part are not exceeded.

For intentional device, according to FCC 47 CFR Section 15.203, an intentional radiator shall be designed to ensure that no antenna other than that furnished by the responsible party shall be used with the device.

8.4.2 Result

PASS.

Note:
- ☑ Antenna use a permanently attached antenna which is not replaceable.
- ☐ Not using a standard antenna jack or electrical connector for antenna replacement
- ☐ The antenna has to be professionally installed (please provide method of installation)

Which in accordance to section 15.203 and RSS-GEN Clause 6.8, please refer to the internal photos.

--------- END OF REPORT --------