Portable Power Station

583Wh Portable Lithium Battery
Emergency Power Source

SPS-700-01

© 2022 Shell Brands International AG. All rights reserved.

TABLE OF CONTENTS

IMPORTANT SAFETY INSTRUCTIONS 3
EXPLANATION OF SYMBOLS 4
SIGNAL WORDS 4
INTENDED USE 5
BEFORE FIRST USE 5
TIPS 5
PARTS AND FEATURES 6
INSTALLATION INSTRUCTIONS 9
OPERATING INSTRUCTIONS 10
COMPLIANCE 12
USER MAINTENANCE INSTRUCTIONS 13
MOVING AND STORAGE INSTRUCTIONS 13
SPECIFICATIONS 14
TROUBLESHOOTING 15
WARRANTY CONDITIONS 17
FCC STATEMENT 18

IMPORTANT SAFETY INSTRUCTIONS

INSTRUCTIONS PERTAINING TO RISK OF FIRE, ELECTRIC SHOCK, OR INJURY TO PERSONS

WARNING – When using this product, basic precautions should always be followed, including the following:

a) Read all the instructions before using the product.
b) To reduce the risk of injury, close supervision is necessary when the product is used near children.
c) Do not put fingers or hands into the product.
d) Use of an attachment not recommended or sold by the power pack manufacturer may result in a risk of fire, electric shock or injury to persons.
e) To reduce the risk of damage to the electrical plug and cord, pull the plug rather than the cord when disconnecting the power pack.
f) Do not use a battery pack or product that is damaged or modified. Damaged or modified batteries may exhibit unpredictable behavior resulting in fire, explosion or risk of injury.
g) Do not operate the power pack with a damaged cord or plug, or a damaged output cable.
h) Do not disassemble the power pack; take it to a qualified service person when service or repair is required. Incorrect reassembly may result in a risk of fire or electric shock.
i) To reduce the risk of electric shock, unplug the power pack from the outlet before attempting any instructed servicing.
j) When charging the internal battery, work in a well ventilated area and do not restrict ventilation in any way.
k) Do not expose a power pack to fire or excessive temperature. Exposure to fire or temperature above 265 °F (130 °C) may cause explosion.
l) Have servicing performed by a qualified repair person using only identical replacement parts. This will ensure that the safety of the product is maintained.

- This product is not waterproof. Use indoor if it is raining or the ground is wet outside.
- The product is not to be stored or kept in a vehicle.
- Do not plug in a device that exceeds the rated power or current value of the AC or DC output ports. Doing so may result in electrical shock, chemical burn, fire, or explosion and will void the warranty.

- Do not disassemble the product, there are no user-serviceable parts inside. Incorrect reassembly may result in electrical shock, chemical burn, fire, or explosion causing personal injury or damage to other devices. Disassembly of the product will void the warranty.
- Improper use of this product may result in electrical shock, chemical burn, fire, or explosion causing personal injury or damage to other devices.
- The product may become warm during operation. During operation, keep the product away from materials that may be affected by warm temperatures.
- Do not leave a product on prolonged charge when not in use.

SAVE THESE INSTRUCTIONS FOR FUTURE REFERENCE!

EXPLANATION OF SYMBOLS

∼	Alternating current (AC)
⎓	Direct current (DC)

SIGNAL WORDS

⚠ **DANGER**	Indicates a hazardous situation that, if not avoided, will result in death or serious injury.
⚠ **WARNING**	Indicates a hazardous situation that, if not avoided, could result in death or serious injury.
⚠ **CAUTION**	Indicates a hazardous situation that, if not avoided, could result in minor or moderate injury.
NOTICE	Indicates information considered important, but not hazard related.

INTENDED USE

- This product is intended for charging external devices. This product supports DC and AC outputs and provides USB-A & QC, USB-C PD and wireless charging functionality.
- This product features an emergency light function to alert other motorists of non-moving objects on the road.
- This product is intended for private use only. It is not intended for commercial use.
- This product is not waterproof. Use indoor if it is raining or the ground is wet outside.
- This product is not suitable for use with personal safety equipment, equipment for nuclear facilities, the manufacture of air and spacecraft, etc.

BEFORE FIRST USE

⚠ DANGER

- Keep any packaging materials away from children and pets – these materials are a potential source of danger, e.g. suffocation.

- Remove all the packing materials.
- Remove and review all components before use.

TIPS

⚠ CAUTION

- The product is not permitted for use on aircrafts.
- To preserve the battery lifespan, recharge the battery at least every 6 months.
- Use original or certified charger and cables.
- Avoid extreme temperature.
- Do not drop.
- Do not disassemble.
- Do not expose to liquids.

- Install the plug covers after each operation.
- Fully charge the battery before first use and prolonged storage.
- Charge, operate and store the product in the allowed temperature range only (32–104 °F [0–40 °C]).
- Switch off external devices before connecting them to the product.
- When transporting the product (e.g. in a car) fix the product securely to prevent hitting other objects or a fall.

PARTS AND FEATURES

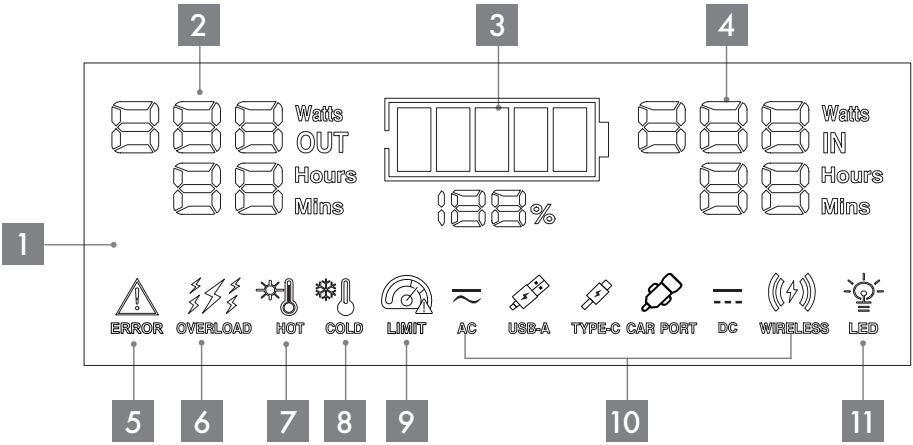

Item	Part Name	Item	Part Name
1	Display	7	Over temperature warning
2	Power of output	8	Low temperature warning
3	Battery level	9	Output Limitation
4	Power of input	10	Output mode
5	Error indicator	11	LED indicator
6	Overload warning		

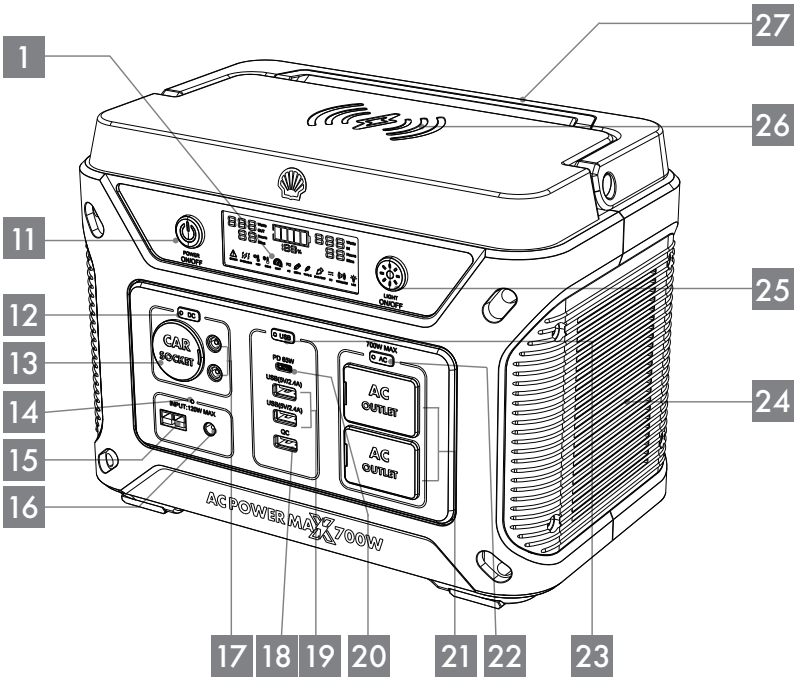

Item	Part Name	Item	Part Name
11	Power button	20	USB-C PD socket (input&output)
12	DC output on/off button	21	AC power socket x2
13	Car charger socket	22	AC output on/off button
14	Input indicator	23	USB output on/off button
15	Anderson sockets (Solar panel)	24	Fan
16	DC socket (input only)	25	LED light on/off button
17	DC socket x2 (output only)	26	Wireless charging panel
18	USB-A QC socket	27	Handle
19	USB-A socket x2		

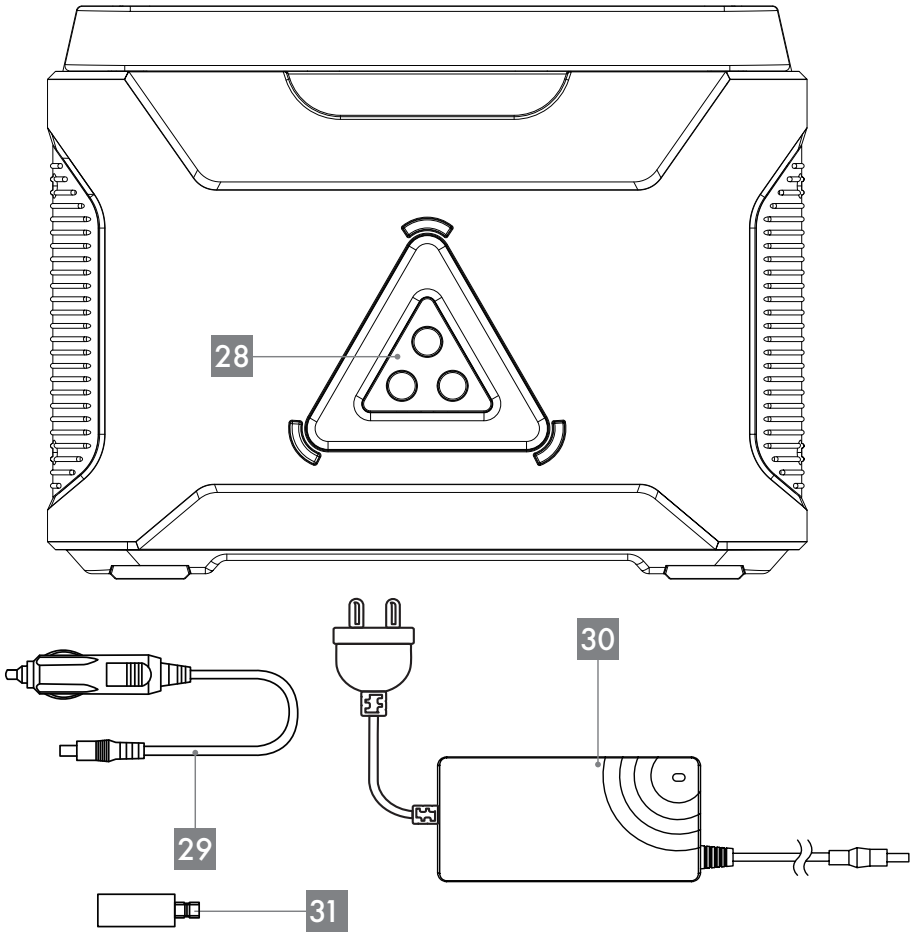

Item	Part Name
28	LED light module
29	12V car charger
30	Power adaptor
31	DC 7909 to 5521 adapter

INSTALLATION INSTRUCTIONS

Charging the product

NOTICE

- Fully charge the product before first use.
- During charging, the input indicator 14 lights up and the bars of the battery level 3 are flashing.
- When the input indicator 14 goes off and the battery level 3 shows 100 %, the product is fully charged. Disconnect the charger from the product.

- There are 4 ways of charging the product:

Charging method	How to charge	Full charge duration
Power adaptor 30	• Connect the power adaptor 30 to the DC socket 16.	around 6 hours
12 V car charger 29	• Connect the car charger plug to the DC socket 16.	around 6 hours
100 W solar panel MPPT (not provided)	• Connect the solar panel plug to the Anderson sockets 15 **or** to the DC socket 16. (connect to one at a time)	around 6 hours (depending on the weather conditions)
USB-C power delivery 60 W (not provided) not support less than PD 60W charger	• Connect the charger to the USB-C PD socket 20.	around 9 hours

Want to be faster? Here is a way to speed up the charging time:

Connect both 120W power adapter and USB-C power delivery 60W charger at the same time, you can have the most optimum charging rate at 160W maximum, the duration time will be around 4 hours to fully charge.

OPERATING INSTRUCTIONS

Before operating the product, refer to the **Important safety instructions** chapter on P. 3 in order to avoid the risk of fire, electric shock or injury to persons.

First to use this product

We put the battery in a deep sleep mode to ensure that the power station can maintain about 30% battery life for at least 3 months. Recommend user use the in-box adapter to charge up the battery until 100% before use.
No worry, you just only need to do it once at the beginning and you can free to use the product.

Switching on/off

NOTICE

- After 2 minutes of inactivity without any power input/output, the display 1 goes off.
- After 2 hours of inactivity without any power input/output, the product switches off.

- To switch on, press and hold the power button 11 for 3 seconds. The power button 11 and the display 1 light up.
- To switch off, press and hold the power button 11 for 3 seconds. The power button 11 and the display 1 go off.

Charging external devices

⚠ CAUTION

- Before connecting, ensure the connected device(s) do not exceed the product's output (see the **Specifications** chapter, P. 14).
- Switch off external devices before connecting them to the product.

When the product is on, press the corresponding button to charge:

How to charge	Start/stop charging	On indicator
• Connect the external device to the car charger socket 13. • Connect the external device to the DC socket 17.	Press the DC output on/off button 12.	DC output on/off button 12 lights up.
• Place the wireless charging compatible external device on the wireless charging panel 26. • Connect the external device to the USB-A socket(s) 19. • Connect the external device to the USB-A QC socket 18. • Connect the external device to the USB-C PD socket 20.	Press the USB output on/off button 23.	USB output on/off button 23 lights up.
• Connect the external device(s) to the AC power socket(s) 21.	Press and hold the AC output on/off button 22 for 2 seconds.	AC output on/off button 22 lights up.

Status	Battery level	Condition
1	100% – 6%	Can be used normally.
2	Below 5%	Battery level 3 flashes on the display. Can be used normally.
3	0%	Error code 04 show up. Please recharge immediately.

Operating the LED light module (not only for emergency use)

NOTICE

- The LED light module 28 can be used to support the emergency triangle of your vehicle to alert other motorists of non-moving object on the road.
- Place the emergency triangle of your vehicle 100 feet (30 m) behind the vehicle, and this product, with the emergency light on, 10 feet (3 m) behind the vehicle.

To toggle between the LED light modes, press the LED light on/off button 25 repeatedly. LED indicator 9 is on when any LED light mode is active.

Press LED light on/off button 25	Light mode
1	Steady emergency triangle light
2	Flashing emergency triangle light
3	Night torch mode high
4	Night torch mode low
5	SOS/repellent mode (with beep sound)
6	Off

NOTICE

- Hold the LED light on/off button 25 for 3 seconds to enter the SOS/repellent mode directly. LED indicator 9 is on when any light mode is active.

COMPLIANCE

Output	Devices	Wattage	Usage life
AC power	32" TV	60 W	approx. 7.5 hours
Car charger	12 V Electric kettle	120 W max.	approx. 2 hours
DC	Mini fridge	60 W	approx. 37 hours
DC	Drone	90 W	approx. 9 recharges
USB-C PD	Mobile phone	20 W	approx. 53 recharges
USB-C PD	12" Mac Book	30 W	approx. 7 recharges
USB-C PD	Motion camera	5 W max.	approx. 95 recharges

USER MAINTENANCE INSTRUCTIONS

⚠ CAUTION

- Install the plug covers before cleaning and/or storing the product.
- Always carry the product by the handle 27.

- Disconnect all external devices and switch off the product before cleaning.
- During cleaning, do not immerse the product in water or other liquids. Never hold the product under running water.
- To clean the product, wipe with a soft, slightly moist cloth.
- Never use corrosive detergents, wire brushes, abrasive scourers, metal or sharp utensils to clean the product.

MOVING AND STORAGE INSTRUCTIONS

NOTICE

- The product's battery is not replaceable.

- Fully charge the battery before storage. In case of a prolonged storage, fully charge the product every 6 months.
- Store the product in its original packaging in a dry area. Keep away from children and pets.
- Store the product in dry, warm conditions, away from direct sunlight.

SPECIFICATIONS

General

Model:	SPS-700-01
Discharging temperature:	-4°F to 140°F (±5°F), -20°C to 60°C (±3°C)
Charging temperature:	32°F to 122°F (±5°F), 0°C to 50°C (±3°C)
Net weight*:	15.0 lb (6.7 kg)
Dimensions*:	11.81 x 7.08 x 8.66" (30 x 18 x 22 cm)

*The weight and dimensions may vary due to measurement errors. Please refer to the actual measurements.

Power Output

AC output:	700 W Continuous, 1400W Surge Peak 120 V∼ 60 Hz, Pure Sine Wave		
DC output x2:	12 V ⎓, 5 A(each)		
Car socket output:	12 V ⎓, 10 A		
USB output:	2 x USB-A	5 V, 2.4 A	Max. 12 W x 2
	1 x USB (QC)	5 V, 3 A; 9 V, 2 A; 12 V, 1.5 A	Max. 18 W
	1 x Type C (PD)	5 V, 3 A 9 V, 3 A 15 V, 3 A 20 V, 3.25A	Max. 65 W
Wireless output:	Max. 15W		

Power Input

Power input:	Max. 120 W, 24 V ⎓
Solar panel input:	Max. 120 W panel power, max. 5 A current
USB input:	Min. 60 W Type C (PD)

Battery

Battery type:	Lithium-Ion 583 Wh
Shelf life:	1 year (after full charge)
Cycle life:	500 cycles (80 %)

TROUBLESHOOTING

Error code	Problem	Solution
OVERLOAD 01	Over load	Remove extra devices from DC or AC outputs
02	PV (Solar panel) charging input over-powered	Replace another solar panel with less output power.
HOT 03	Temperature too high	Keep the product at suitable ambient temperature.
or		
COLD 03	Temperature too low	
04	Output low voltage	Recharge the station before use
05	Short circuit	Remove the appliance and check if there are any short circuits.
06	System error	Email support@skyintelligent.com for customer support.
07	DC input error	Plug the DC charging cable to the correct input socket 16 - see page 7

Error code	Problem	Solution
—	The product does not switch on	Charge the battery. (see **Charging the product** chapter, P. 9)
—	The product does not charge or operate	Ensure to press the corresponding charging type button. (see **Charging external devices** chapter, P. 11) Ensure the device and charging cables are functioning. Change to another cable if problem persists.
—	Fan 24 blockage	Switch off the product. Vacuum the fan's 24 vents.

WARRANTY CONDITIONS

a) We will, at our discretion, repair any product that proves to be defective in material or workmanship during the warranty period of 12 months.

b) A valid proof of purchase must be presented upon request for warranty service;

c) The warranty shall not apply if:

- the product was modified or repaired in any way by persons other than our technicians
- the product has been damaged through misuse, negligence or inflow of any liquid
- the product was not used according to user manual
- losses or damages are caused by force majeure or natural disasters

d) The warranty terms and conditions are subject to change without prior notice.

e) Product specifications are subject to change without prior notice.

f) Shell shall not be liable for technical or editorial errors or omissions contained herein.

g) Visit www.skyintelligent.com/support for support and the latest product information.

FCC STATEMENT

FCC SUPPLIER'S DECLARATION OF CONFORMITY

Unique Identifier	SPS-700-01
Responsible Party	TianHeng Consulting, LLC
U.S. Contact Information	392 Andover Street, Wilmington, MA 01887, USA
Email	support@skyintelligent.com

FCC COMPLIANCE STATEMENT

1. This device complies with Part 15 of the FCC Rules. Operation is subject to the following two conditions:
   (1) this device may not cause harmful interference, and
   (2) this device must accept any interference received, including interference that may cause undesired operation.
2. Changes or modifications not expressly approved by the party responsible for compliance could void the user's authority to operate the equipment.

FCC INTERFERENCE STATEMENT

This equipment has been tested and found to comply with the limits for a Class B digital device, pursuant to part 15 of the FCC Rules. These limits are designed to provide reasonable protection against harmful interference in a residential installation. This equipment generates, uses and can radiate radio frequency energy and, if not installed and used in accordance with the instructions, may cause harmful interference to radio communications.

However, there is no guarantee that interference will not occur in a particular installation.

If this equipment does cause harmful interference to radio or television reception, which can be determined by turning the equipment off and on, the user is encouraged to try to correct the interference by one or more of the following measures:

- Reorient or relocate the receiving antenna.
- Increase the separation between the equipment and receiver.
- Connect the equipment into an outlet on a circuit different from that to which the receiver is connected.
- Consult the dealer or an experienced radio / TV technician for help.

ISED COMPLIANCE STATEMENT

This device contains licence-exempt transmitter(s)/receiver(s) that comply with Innovation, Science and Economic Development Canada's licence-exempt RSS(s). Operation is subject to the following two conditions:
(1) This device may not cause interference.
(2) This device must accept any interference, including interference that may cause undesired operation of the device.
L'émetteur/récepteur exempt de licence contenu dans le présent appareil est conforme aux CNR d'Innovation, Sciences et Développement économique Canada applicables aux appareils radio exempts de licence. L'exploitation est autorisée aux deux conditions suivantes :
(1) L'appareil ne doit pas produire de brouillage;
(2) L'appareil doit accepter tout brouillage radioélectrique subi, même si le brouillage est susceptible d'en compromettre le fonctionnement.

This equipment complies with FCC/IC RSS-102 radiation exposure limits set forth for an uncontrolled environment. This equipment should be installed and operated with minimum distance 20 cm between the radiator and your body.
Cet équipement est conforme aux limites d'exposition aux radiations FCC/IC CNR-102 établies pour un environnement non contrôlé. Cet équipement doit être installé et utilisé avec une distance minimale de 20 cm entre le radiateur et votre corps.

Imported by:
TianHeng Consulting Inc.
130 Terence Matthews Cres, Suite C2
Kanata, ON K2M 0J1
Canada

Portable Power Station

583Wh Portable Lithium Battery
Emergency Power Source

SPS-700-01

Power Station is part of the Shell Energy range of products.
Shell and the Shell Pecten logo are trade marks of Shell. Used under license.

V1.0