GuangDong LeapFive

Technology Co.,Ltd.,

specifications

Module name:LF-WM03 module

Version number:LF_WM_FW_1.0.0

Days: 2020-08-20

Outline

The name of the module

- LF-WM03

characteristic

- Supports the 802.11 b/g/n standard, frequency range 2400M to 2483.5MHz
- Contains 276KB SRAM/128KB ROM/1Kb eFuse
- Operating voltage:DC 2.5 V to 3.6 V
- Wi-Fi-related features
  - Support for IEEE 802.11 b/g/n standard
  - 20MHz bandwidth
  - Supports STA, SoftAP and sniffer mode
  - PCB onboard antenna
- peripheral
  - 2*UART
  - 1*I2C
  - 5*PWM
  - 1*SPI
  - 1*SDIO
  - 1*12bit ADC
  - 1*10bit DAC
  - 13*GPIO

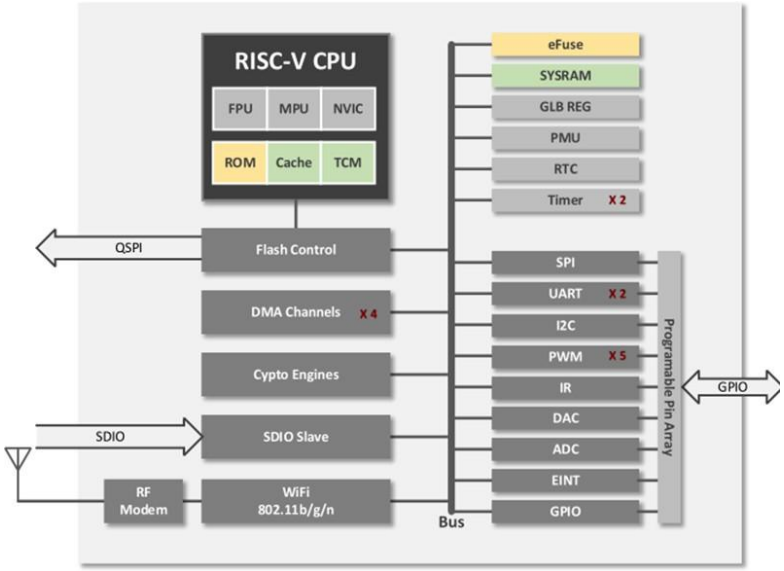

Scenario

- Smart Home / Home Appliances
- Smart transportation
- Smart lighting
- Intelligent security
- Industrial automation

Directory

Outline..... 2
1.Introduction: 4
1.1 Package size..... 4
1.2 Pin definition..... 5
2.Electrical parameters 7
2.1 working conditions..... 7
2.2 Hardware and software parameters..... 8
2.3 Power parameters..... 8
3 RF parameters 10
3.1 RX features..... 10
3.2 TX features..... 11
4.MCU 11
4.1 CPU..... 11
4.2 storage..... 12
4.3 Crystal..... 12
5.Assembly information and production guidance..... 13
5.1 Assembly dimensions..... 13
5.2 PCB antenna clearance area 13
5.3 Production precautions..... 14

1.Introduction:

The LF-WM03 module is alow-cost, high-performance WIFI module based on the LF686C(32-bit RISC CPU with FPU) to create a cost-effective IoT module for customers. Figure 1 shows the hardware block diagram of the LF-WM03 module, consisting of the following three major parts:

- 32-bit RISC-V core CPU
- WiFi RF module
- Enrich peripherals

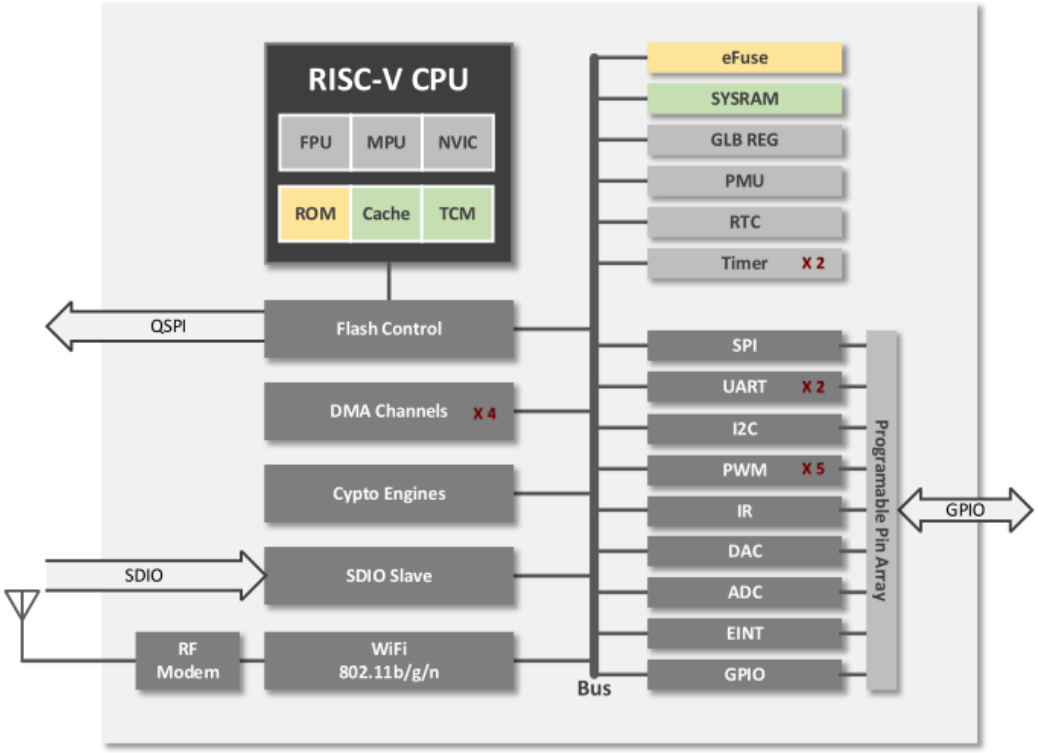

Figure 1 LF-WM03 hardware block diagram

thereinto:

- 32-bit RISC-V core CPU with up to 192MHz operating frequency
- Internal integration 276KB SRAM,128KB ROM
- Supports high-speed UART,I2C,SPI,PWM,andmultiple GPIO portes
- Enter typical voltage:3.3V

1.1 Package size

The LF-WM03 patch module has a dimensions of (16.00±0.10) mm x (24.00±0.10) mm x (3.00±0.10)mm. The exact dimensions are shown in Table 1.

Table 1 Module Size Reference Table

Long	Wide	High	PAD size	PIN foot spacing
24mm	16mm	3.0mm	1*1.4mm	2mm

The LF-WM03 module is designed in a stamp package as shown in Figure 2 for easy commissioning, easy disassembly and a variety of options for customer design. A total of 16 pins are drawn, with a 2mm pin spacing and evenly distributed on both sides of the module.

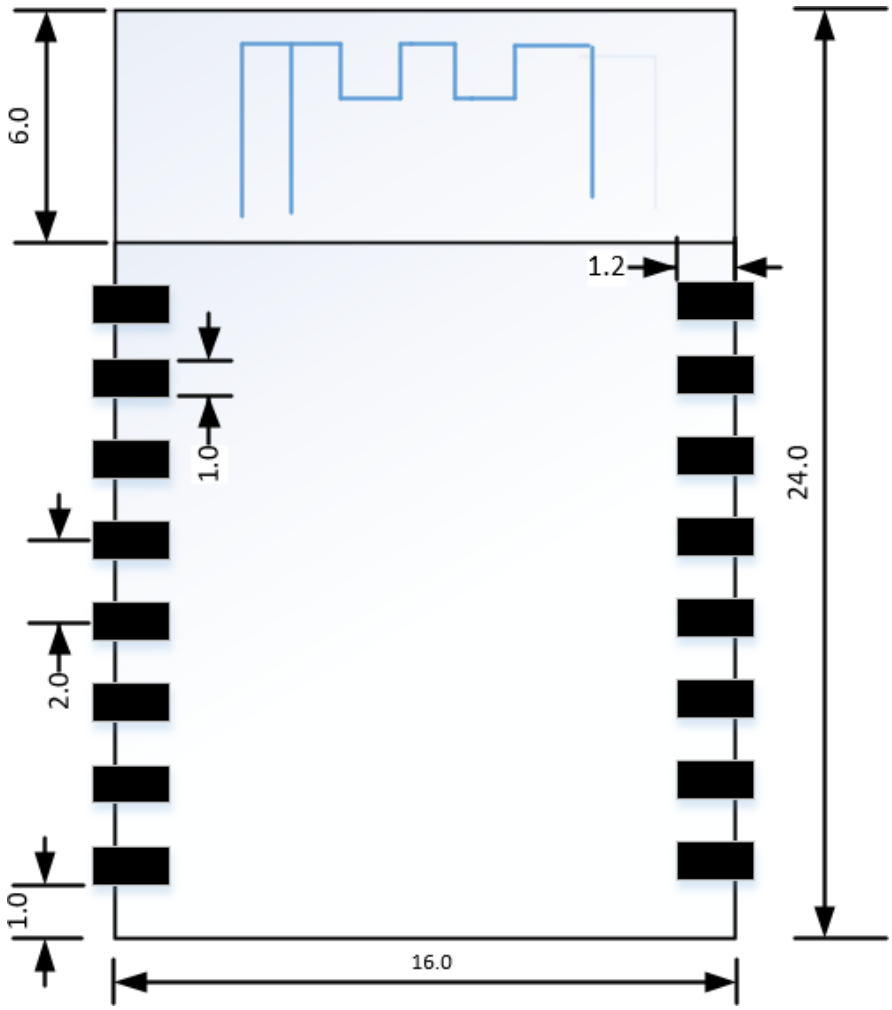

Figure 2 Stamp hole package dimensions

1.2 Pin definition

1.2.1 Pin distribution

The pin distribution of the LF-WM03 patch module is shown in Figure 3, resulting in a total of 16 feet, 13 GPIO, and one power, ground, and reset pin each.

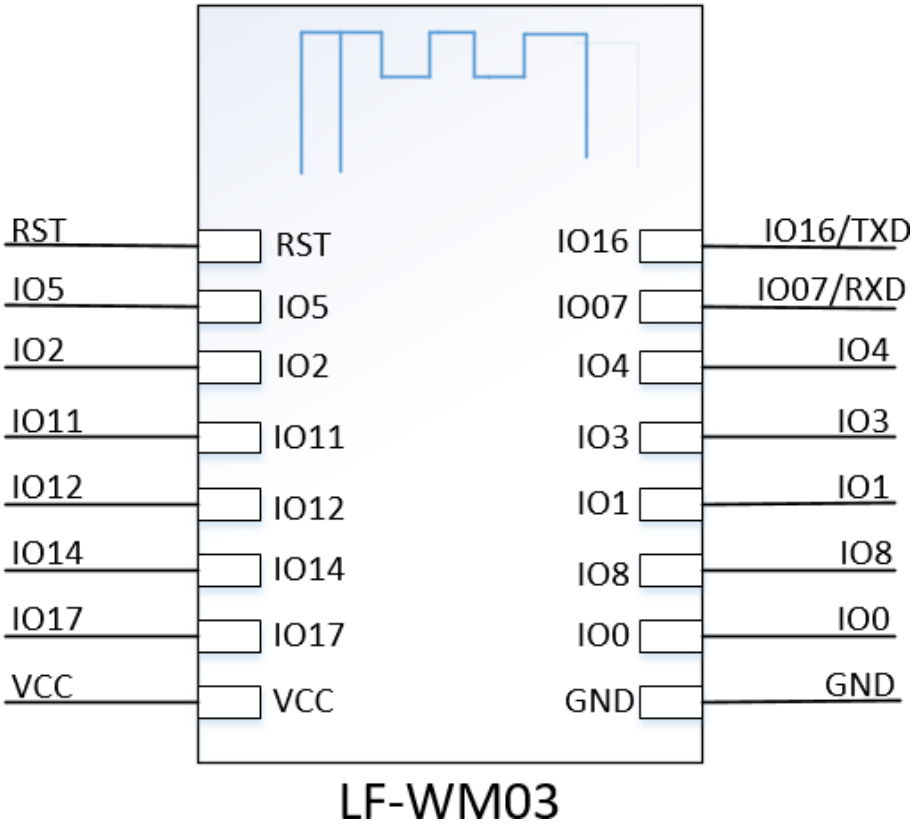

Figure 3 LF-WM03 Pin Definition

1.2.2 Pin definition

The LF-WM03 pin definition is shown in Table 2.

Table 2 LF-WM03 Pin Definition Table

Serial number	Pin name	Description of the function
1	RST	Reset the foot
2	IO_05	SDIO, SPI, I2C, UART, PWM, GPIO
3	IO_02	SDIO, SFLASH, SPI, I2C, UART, PWM, GPIO
4	IO_11	SPI, I2C, UART, PWM, AUXADC, GPIO
5	IO_12	SPI, I2C, UART, PWM, AUXADC, GPIO
6	IO_14	SPI, I2C, UART, PWM, AUXADC, GPIO
7	IO_17	SFLASH, SPI, I2C, UART, PWM, GPIO
8	VCC	3.3V

Serial number	Pin name	Description of the function
9	GND	GND
10	IO_00	SDIO, SFLASH, SPI, I2C, UART, PWM, GPIO
11	IO_08	SPI, I2C, UART, PWM, AUXADC, GPIO
12	IO_01	SDIO, SFLASH, SPI, I2C, UART, PWM, GPIO
13	IO_03	SDIO, SPI, I2C, UART, PWM, GPIO
14	IO_04	SDIO, SPI, I2C, UART, PWM, GPIO
15	IO_07	SPI, I2C, UART, PWM, AUXADC, GPIO
16	IO_16	SPI, I2C, UART, PWM, GPIO

Note: IO08 port needs to be pulled up when downloading burning, not when using it.

2. Electrical parameters

2.1 working conditions

The LF-WM03 module recommends working parameters as shown in Table 3.

Table 3 recommends working conditions

Parameter	Name	Minimum	Typical value	Maximum	Unit
Store the temperature	/	–40 °C	25℃	125 °C	/
Operating temperature	/	–20 °C	25℃	85 °C	/
Supply voltage	VDD	2.5	3.3	3.6	V
In-logic low level	V IL	–0.3	/	0.25 VDD	V
In-logic high level	V IH	0.75 VDD	/	VDD + 0.3	V
Output logic low level	V OL	/	/	0.1 VDD	V
Output logic high level	V OH	0.8 VDD	/	/	V

The maximum rating for electrostatic protection for the LF-WM03 module is shown in Table 4, and exceeding the maximum rating can cause permanent damage to the hardware.

Table 4 Maximum rating for electrostatic protection

Parameter	Minimum	Maximum	Unit
ESD Protection (HBM)	/	2000	V

2.2 Hardware and software parameters

Type	Parameter	Illustrate
Wireless parameters	WIFI protocol	802.11 b/g/n
	Frequency range	2400M ~ 2483.5MHz
Hardware parameters	The data interface	UART/I2C/SPI/IR remote control
		GPIO/PWM
	Operating voltage	2.5 V ~ 3.6 V
	Operating current	The average current is 80mA
	The current is supplied	Minimum 500mA
	Operating temperature	–20°C ~ 85 °C
	Package size	(16.00±0.10) mm x (24.00±0.10) mm x (3.00±0.10) mm
Software parameters	Wireless network mode	Supports STA, SoftAP, and sniffer mode
	Security mechanisms	WPA/WPA2
	Type of encryption	WEP/TKIP/AES
	Upgrade the firmware	Local serial burn / cloud upgrade / host download burn
	Software development	Supports customers to customize servers and provide the SDK required for secondary development
	Network protocols	IPv4，TCP/UDP/HTTP

2.3 Power parameters

Table 5 LF-WM03 Power Parameters

Mode		Remark	Power consumption at 25℃			
			Minimum	Typical value	Maximum	Unit
RX	11b	/	/	35	/	mA
	11g	/	/	39	/	
	11n	/	/	39	/	

TX		Duty 50%	/	190	/	

	11b - 11Mbps @21dBm	Duty 99%	/	310	/	
	11g - 54Mbps @18dBm	Duty 50%	/	145	/	
		Duty 99%	/	230	/	
	11n - MCS7 @17dBm	Duty 50%	/	130	/	
		Duty 99%	/	215	/	
MCU	Run	Freq@192MHz	/	22	/	
	StandBy	Freq@<10MHz	/	2	/	
Sleep	PDS7	Fast recover	/	12	/	uA
Hibernate	HBN	RTC or GPIO wakeup	/	0.5	/	
Shut-down	/	/	/	0.1	/	

3 RF parameters

3.1 RX features

Table 6 RX features

Mode		Test data at 25 ℃			
		Minimum	Typical value	Maximum	Unit
RX receives sensitivity	11b - 1Mbps	/	-98	/	dBm
	11b - 11Mbps	/	-91	/	
	11g - 6Mbps	/	-93	/	
	11g - 54Mbps	/	-77	/	
	11n - MCS0	/	-93	/	
	11n - MCS7	/	-73	/	
Maximum receive level	11b - 1Mbps	/	5	/	
	11n - MCS0	/	-4	/	
	11n - MCS7	/	-13	/	
Adjacent channel suppression	11b - 1Mbps	/	40	/	dB
	11b - 11Mbps	/	40	/	

	11g - 6Mbps	/	36	/	
	11g - 54Mbps	/	22	/	
	11n - MCS0	/	36	/	
	11n - MCS7	/	19	/	
S11	/	/	＜-10	/	

3.2 TX features

Table 7 TX features

mode		Test data at 25 ℃			
		Minimum	Typical value	Maximum	Unit
Transfer power	11b - 1Mbps	/	19.85	21	dBm
	11b - 11Mbps	/	17.00	21	
	11g - 6Mbps	/	21.21	22	
	11g - 54Mbps	/	20.52	22	
	11n - MCS0	/	21.19	22	
	11n - MCS7	/	21.05	22	
EVM	11g - 54Mbps	/	-28	/	dB
	11n - MCS7	/	-30	/	
Frequency offset	11b - 1Mbps	/	-0.95	/	ppm
	11b - 11Mbps	/	0.71	/	
	11g - 6Mbps	/	-0.82	/	
	11g - 54Mbps	/	-0.95	/	
	11n - MCS0	/	-0.78	/	
	11n - MCS7	/	-0.73	/	

4.MCU

4.1 CPU

LF-WM03 built-in ultra-low power LeapFive LF686C 32-bit RISC processor， CPU Clock speeds can be reached up to 192 MHz,backing Wi-Fi Protocol stack,deep sleep mode consumes up to <1uA。The CPU includes the following interfaces。

- The configurable RAM/ROM connector for the internal storage controller and external Flash can be connected
- Connect the data RAM connector of the storage controller
- Access the AHB port of the register

4.2 storage

The LF-WM03 chip has a built-in storage controller that includes ROM and SRAM. With 276KB SRAM,128KB ROM, and 1Kb eFuse. 2MB Flashis integrated inside thechip.

4.3 Crystal

The LF-WM03 enables the use of 40MHz crystals, which are selected with an

accuracy of ±10 PPM , and load capacitor of less than 12pF.

Note:

- The accuracy of the selected crystal itself needs to be10ppm±, and the operating temperature of the crystal is -20 °C to 85 °C;
- The location of the crystal oscillator should be as close as possible to the XTAL Pins of the chip (the traces should not be too long), and the traces of the crystal oscillator must be grounded and shielded.
- The input and output lines of the crystal cannot be punched into the line, i.e. they cannot cross layers. The input and output lines of the crystal cannot cross, nor can the cross-layer cross-overs.
- The capacitance of the switch of the input and output of the crystal should be placed near the left and right side of the chip and should not be on the line as far as possible.
- Crystals Below can not go up frequency digital signal, the best case is the crystal below do not take any signal lines, crystal TOP surface of the copper-paved area the bigger the better. Crystals are sensitive devices, and there can be no magnetic induction devices around the crystal, such as large inductors.

5.Assembly information and production guidance

5.1 Assembly dimensions

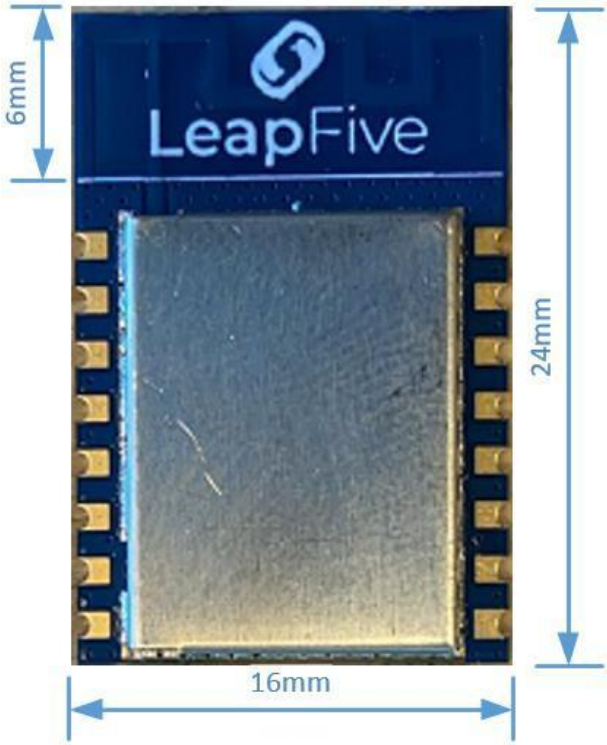

Figure 4 LF-WM03 Assembly Dimensions

5.2 PCB antenna clearance area

When using a PCB antenna on a WIFI module, as shown in Figure 5, you need to ensure that the motherboard PCB antenna is at least as far away from other metal devices more than 16mm.

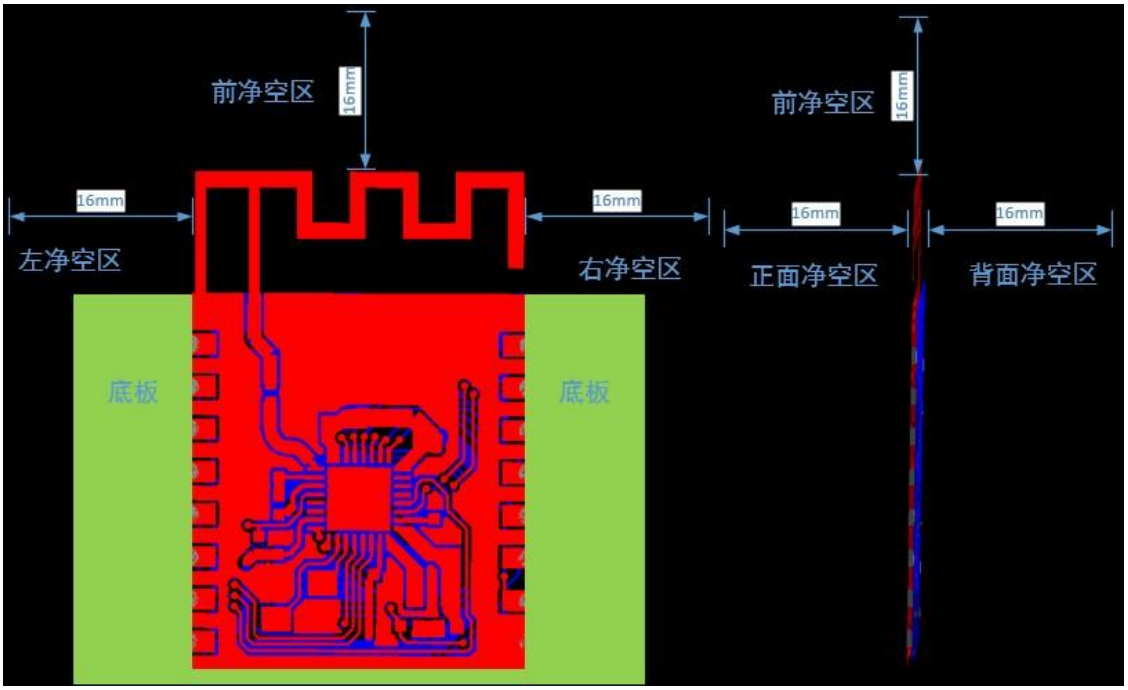

Figure 5 Map of the clearance area of the PCB antenna

5.3 Production precautions

- The LF-WM03 module must be sliced by an SMT machine and baked before the patch.
- The instrument required for the SMT patch
  - Reflow welding patch machine
  - AOI tester
  - Caliber 6-8mm nozzle
- Bake the required equipment
  - Cabinet oven
  - Anti-static, high temperature tray
  - Anti-static high temperature gloves
- In the production process of the operators of each station must wear static gloves;
- After baking, wait for the module to naturally cool down to the temperature of 36℃, before wearing static gloves to take out, so as not to burn;

FCC Statement
FCC standards: FCC CFR Title 47 Part 15 Subpart C Section 15.247,
Integral antenna with antenna gain 1.5dBi
This device complies with part 15 of the FCC Rules. Operation is subject to the following two conditions: (1) This device may not cause harmful interference, and (2) this device must accept any interference received, including interference that may cause undesired operation.
Any Changes or modifications not expressly approved by the party responsible for compliance could void the user's authority to operate the equipment.
Note: This equipment has been tested and found to comply with the limits for a Class B digital device, pursuant to part 15 of the FCC Rules. These limits are designed to provide reasonable protection against harmful interference in a residential installation. This equipment generates, uses and can radiate radio frequency energy and, if not installed and used in accordance with the instructions, may cause harmful interference to radio communications. However, there is no guarantee that interference will not occur in a particular installation. If this equipment does cause harmful interference to radio or television reception, which can be determined by turning the equipment off and on, the user is encouraged to try to correct the interference by one or more of the following measures:
—Reorient or relocate the receiving antenna.
—Increase the separation between the equipment and receiver.
—Connect the equipment into an outlet on a circuit different from that to which the receiver is connected.
—Consult the dealer or an experienced radio/TV technician for help.

FCC Radiation Exposure Statement
The modular can be installed or integrated in mobile or fix devices only. This modular cannot be installed in any portable device if without any further certification， such as C2PC with SAR .
This modular complies with FCC RF radiation exposure limits set forth for an uncontrolled environment. This transmitter must not be co-located or operating in conjunction with any other antenna or transmitter. This modular must be installed and operated with a minimum distance of 20 cm between the radiator and user body.

If the FCC identification number is not visible when the module is installed inside another device, then the outside of the device into which the module is installed must also display a label referring to the enclosed module. This exterior label can use wording such as the following: “Contains Transmitter Module FCC ID: 2AZXW-LF-WM03 Or Contains FCC ID: 2AZXW-LF-WM03”
When the module is installed inside another device, the user manual of the host must contain below warning statements;
1. This device complies with Part 15 of the FCC Rules. Operation is subject to the following two conditions:
(1) This device may not cause harmful interference.
(2) This device must accept any interference received, including interference that may cause undesired operation.
Note: This equipment has been tested and found to comply with the limits for a Class B digital device, pursuant to part 15 of the FCC Rules. These limits are designed to provide reasonable protection against harmful interference in a residential installation. This equipment generates, uses and can radiate radio frequency energy and, if not installed and used in accordance with the instructions, may cause harmful interference to radio communications.
However, there is no guarantee that interference will not occur in a particular installation. If this equipment does cause harmful interference to radio or television reception, which can be determined by turning the equipment off and on, the user is encouraged to try to correct the interference by one or more of the following measures:
—Reorient or relocate the receiving antenna.
—Increase the separation between the equipment and receiver.
—Connect the equipment into an outlet on a circuit different from that to which the receiver is connected.
—Consult the dealer or an experienced radio/TV technician for help.

2. Changes or modifications not expressly approved by the party responsible for compliance could void the user's authority to operate the equipment.
The devices must be installed and used in strict accordance with the manufacturer's instructions as described in the user documentation that comes with the product.
Any company of the host device which install this modular with modular approval should perform the test of radiated & conducted emission and spurious emission,etc. according to FCC part 15C : 15.247 and 15.209 & 15.207 ,15B Class B requirement, Only if the test result comply with FCC part 15C : 15.247 and 15.209 & 15.207 ,15B Class B requirement， then the host can be sold legally.

IC STATEMENT

This device contains licence-exempt transmitter(s)/receiver(s) that comply with Innovation, Science and Economic Development Canada’s licence-exempt RSS(s). Operation is subject to the following two conditions:

(1) This device may not cause interference.

(2) This device must accept any interference, including interference that may cause undesired operation of the device

Cet appareil contient des émetteurs / récepteurs exemptés de licence conformes aux RSS (RSS) d’Innovation, Sciences et Développement économique Canada. Le fonctionnement est soumis aux deux conditions suivantes :

(1) Cet appareil ne doit pas causer d’interférences.

(2) Cet appareil doit accepter toutes les interférences, y compris celles susceptibles de provoquer un fonctionnement indésirable de l’appareil.

IC Radiation Exposure Statement

The modular can be installed or integrated in mobile or fix devices only. This modular cannot be installed in any portable device if without any further certification, such as C2PC with SAR .

This modular complies with IC RF radiation exposure limits set forth for an uncontrolled environment. This transmitter must not be co-located or operating in conjunction with any other antenna or transmitter. This modular must be installed and operated with a minimum distance of 20 cm between the radiator and user body. Cette modulaire doit être installé et utilisé à une distance minimum de 20 cm entre le radiateur et le corps de l’utilisateur.

If the IC number is not visible when the module is installed inside another device, then the outside of the device into which the module is installed must also display a label referring to the enclosed module. This exterior label can use wording such as the following:

“Contains IC: 27307-LFWM03”

when the module is installed inside another device, the user manual of this device must contain below warning statements;

1. This device contains licence-exempt transmitter(s)/receiver(s) that comply with Innovation, Science and Economic Development Canada’s licence-exempt RSS(s). Operation is subject to the following two conditions:

(1) This device may not cause interference.

(2) This device must accept any interference, including interference that may cause undesired operation of the device.

2. Cet appareil contient des émetteurs / récepteurs exemptés de licence conformes aux RSS (RSS) d’Innovation, Sciences et Développement économique Canada. Le fonctionnement est soumis aux deux conditions suivantes :

(1) Cet appareil ne doit pas causer d’interférences.

(2) Cet appareil doit accepter toutes les interférences, y compris celles susceptibles de provoquer un fonctionnement indésirable de l’appareil.

The devices must be installed and used in strict accordance with the manufacturer’s instructions as described in the user documentation that comes with the product