ES9100 Wireless Charger Desktop Organizer

Instruction Manual

To ensure a long service life and optimum functionality of the product,we recommend that you read this manual carefully.

Package Content

•Wireless charger organizer

•USB Cable

•User Manual

Product description

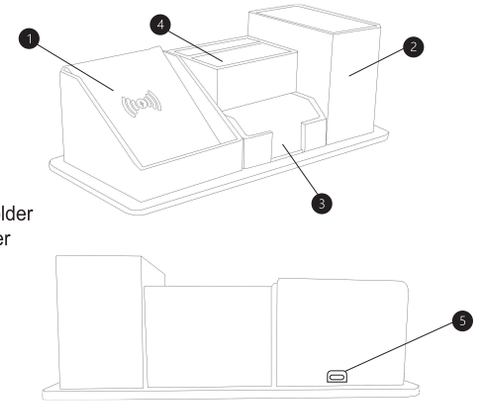

1.charging sensing area 2.pen holder
3.memo holder 4.accessory holder
5.input port

Specifications

•Power: 5W,7.5W,10W

• Input:5V/2A, 9V/2A

• Output:5W,7.5W,10W

• Charging Distance: Within 8mm

• Charging Efficiency: Within 75%

Instruction for use

1.Using the USB cable supplied,insert the micro USB connector into its port on the charger and then insert the standard USB-A connector into any standard USB charging port with a maximum approved power source of 5V/2A.

2.Place your QI compatible phone with inductive wireless charge feature onto the charger's charge plate.

3.You may also need to remove your phone case to facilitate charging.

Note

Only devices which support Qi Wireless charge technology can be wirelessly charged from this charger, please check your devices specifications.

Caution and safety:

• Do not expose to moisture, sunlight, or other heat sources.
• Keep away from children and ensure all adults who use this product read and follow these instructions and warnings.
• Operation temperature range between 32 °F and 113 °F.
• Use correct voltage charge, 5V only.

CAUTION: Risk of Fire and Burns. Do Not Open, Crush, Heat Above 45°C /113 °F or Incinerate. Follow Manufacturer 's Instructions.
ATTENTION: Risque d'incendie et de brûlures. Ne pas incinérer, ouvrir ou endommager, ne pas exposer à une chaleur au-dessus de 45°C / 113°F. Merci de suivre les instructions du fabricant.

21CM

30CM

FCC Statement:
This device complies with part 15 of the FCC rules. Operation is subject to the following two cond itions: (1) this device may not cause harmful interference, and (2) this device must accept any inte rference received, including interference that may cause undesired operation.
Caution: Changes or modifications not expressly approved by the party responsible for compliance could void the user's authority to operate the equipment.
NOTE: This equipment has been tested and found to comply with the limits for a Class B digital d evice, pursuant to part 15 of the FCC Rules. These limits are designed to provide reasonable prote ction against harmful interference in a residential installation. This equipment generates uses and c an radiate radio frequency energy and, if not installed and used in accordance with the instructions , may cause harmful interference to radio communications. However, there is no guarantee that int erference will not occur in a particular installation. If this equipment does cause harmful interferen ce to radio or television reception, which can be determined by turning the equipment off and on, t he user is encouraged to try to correct the interference by one or more of the following measures:
- Reorient or relocate the receiving antenna.
- Increase the separation between the equipment and receiver.
- Connect the equipment into an outlet on a circuit different from that to which the receiver is connected.
-Consult the dealer or an experienced radio/TV technician for help important announcement
Radiation Exposure Statement
The equipment complies with FCC radiation exposure limits set forth for an uncontrolled environment. During the operation of device a distance of 15 cm surrounding the device and 20 cm above the top surface of the device must be respected.

IMPORTANT SAFETY INSTRUCTIONS

WARNING- When using this product, basic precautions should always be followed, including the following:

• Read all the instructions before using the product.
• To reduce the risk of injury, close supervision is necessary when the product is used near children.
• Do not put fingers or hands into the product.
• Do not expose the product to rain or snow.
• Use of a power supply or charger not recommended or sold by the product manufacturer may result in a risk of fire or injury to persons.
• Do not use the product in excess of its output rating. Overloading outputs above rating may result in a risk of fire or injury to persons.
• Do not use the product that is damaged or modified. Damaged or modified batteries may exhibit unpredictable behavior resulting in fire, explosion or risk of injury.
• Do not disassemble the product. Take it to a qualified service person when service or repair is required. Incorrect reassembly may result in a risk of fire on injury to persons.
• Do not expose the product to fire or excessive temperatures. Exposure to fire or temperature above 1OO °C may cause an explosion.
• Have servicing performed by a qualified repair person using only identical replacement parts. This will ensure that the safety of the product is maintained.
• Switch off the product when not in use.