MBH FITNESS
MAKE BODY HEALTHY

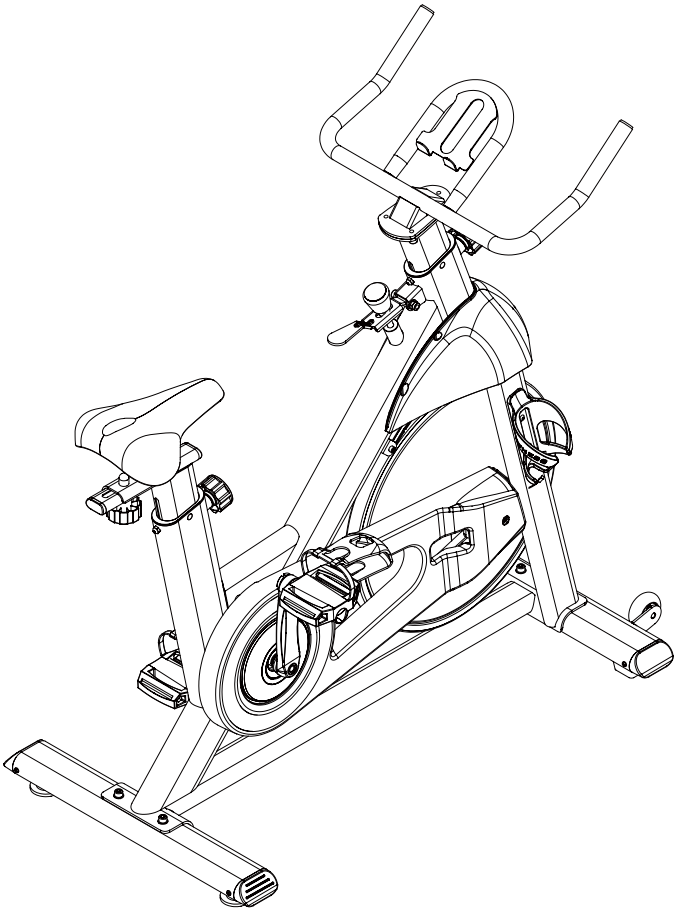

KD5801

INDOOR EXERCISE BIKE

OWNER'S MANUAL

ATTENTION

Assembly Instruction Video

You can scan this QR code to enter into your YouTube page and follow the product assembly videos.
Hope it will be helpful for you.

Contact us at Instagram.
(Scan this QR code)

Contact us at Facebook.
(Scan this QR code)

PLEASE DO NOT RETURN THIS PRODUCT UNTIL YOU CONTACTED US.

IMPORTANT. Contact customer service if you have any questions regarding assembly or proper operation of the machine.

Email us at: support@mbhfit.com
Call us at: (+1)888-666-4018
Time: 8:00 a.m. - 5:00 p.m. (PST) Daily

▲ Prior to assembling the machine and having your workout, please carefully read this manual which contains information about how to assemble and use it correctly. We assume that you have read it when you are using it.

▲ Please carefully fill out the warranty card and well retain it after your purchase. Mail the payment receipt to us so we can offer you quality services more conveniently.

▲ This manual may be modified along with improvement of the machine and we'll not give further notice about it.

▲ This manual should be well retained so that you can read it at any time.

Note: Color and structure of the indoor bike are subject to the real object while they may differ slightly in the figure from the actual ones. The company reserves the right to modify the product and will not provide further notice.

CONTENTS

SAFE USE NOTICES ····· 1
SAFE EXERCISE NOTICES ····· 3
DESIGN ILLUSTRATION ····· 4
ASSEMBLY INSTRUCTIONS ····· 5
DEBUGGING ····· 9
PRODUCT DESCRIPTION ····· 11
BLUETOOTH INSTRUCTION ····· 13
BEGINNER'S GUIDE ····· 15
ROUTINE MAINTENANCE ····· 18
WARRANTY ····· 19

SAFETY INSTRUCTIONS

1. To ensure that you can use this bike safely, reliably and comfortably, please read the important notices below and all the operation instructions prior to usage. We assume no liability for any personal injury or property damage caused by any failure to comply with the relevant safety notices.
2.Please consult your physician prior to planning or commencing an exercise program. This is especially important to users above 35 or with existing health problem.

Important Notes

The owner of this product is responsible for ensuring that all users have read the instructions and be familiar with warnings and safety precautions.

1. This product can only be used in studios and home gyms.
2. The Maximum User Weight Capacity is 330lbs/150kgs. (NOTE)
3. Children are not allowed to approach the machine or stand on the machine without supervision of adults.
4. Children under 14, the old, the disabled and cardiac patients are prohibited from using it; the juveniles must use it under professional guidance.(DANGER)
5. If you feel chest pain, nausea, dizziness or tachypnea during workout, stop immediately and consult a doctor.(WARNING)
6. In case it moves during the usage, securely locate it on an even floor. A clearance of no shorter than 50cm in front and to the rear must be maintained.
7. Check if all fastening screws are tightened and whether handlebar is well fastened prior to use. Otherwise, using it is prohibited in case of any safety accident. (WARNING)
8. Please wear suitable footwear and clothing during exercise.Don’t be barefoot or wear slippers during using this product (CAUTION)
9. 5 to 10 minutes of warm-up exercise must be taken prior to exercising on the bike.
10. Injury to health may result from incorrect or excessive training; hence, please have your workout in correct way, select appropriate resistance and workout duration. Consult a coach if necessary. If the exercise time exceeds 20 minutes, please drink some water accordingly (CAUTION)
11. No touching any moving parts in case of injury to fingers during workout. (DANGER)

12. The bike must be used in a dry room in case of any damage to it. (WARNING)

13. The bike is intended for use solely in the manner described in this manual. (WARNING)

14. Failure to follow these instructions to use the product, we promised quality assurance certificate will not be within range. (NOTICE)

15.This device is not intended to be a medical rehabilitation device.

This machine complies with EN ISO 20957-1 EN 957-10

Warning: Violating the above safety regulations will cause personal and equipment injuries.

Important note

WARNING To reduce burns, fire, electric shock, or injury to others, observe the following:

- Before using a spinning bike, make sure that the equipment is used normally.
- If you feel chest pain , nausea , dizziness or shortness of breath , stop movement immediately, and consult professionals.
- Do not wear clothes that are prone to passive cycling.
- Please wear sports shoes to use this spinning bike.
- Do not throw or stuff anything in the gap.
- Only one person is allowed to use the spinning bike during operation. Do not use more than one person at the same time.

SAFE EXERCISE NOTICES

1. Indoor bike can achieve the effect of exercise and fitness.

2. The lower intensity gradually increases to the higher intensity. Keep your body and head facing forward when exercising, and don't look backwards when a indoor bike is running. If you feel chest pain, nausea, dizziness, or shortness of breath, stop exercising immediately.

3. Never sit at the core of a indoor bike.

4. When using a indoor bike, do not reach into the area where you are moving. For during exercise should not stop quickly down the equipment, intended for foot off the instrument after a complete stop. (Not to attempt a foot off the fast-moving)

5. Please read the product manual carefully before exercising. Specification provides a few suggestions to help you better training methods and selection exercise frequency, intensity and movement with your match's age and physical condition exercise time. At the time of exercise, if you feel chest nausea or chest pain, irregular heartbeat, shortness of breath, dizziness or other discomfort, please stop immediately! Consult a doctor to understand your physical condition before continuing to exercise.

NOTE

1. This fitness equipment is a household product with a maximum weight of 150KG. Please follow the assembly instructions and steps carefully for installation and commissioning. The bicycle must be placed on a flat ground , do not put the bicycle in a humid environmentin.

2. According to the characteristics of the exerciser, it is necessary to adjust the position of the vehicle seat in time. Before the first use and after normal use, please check all parts of this indoor bike.

3. Whether it is completely tightened , if the parts are loose or damaged, please tighten or replace immediately. Please accept the suggestion of the maintenance engineer during the maintenance process. If you need to replace parts on a bicycle, please use original parts.

DESIGN ILLUSTRATION

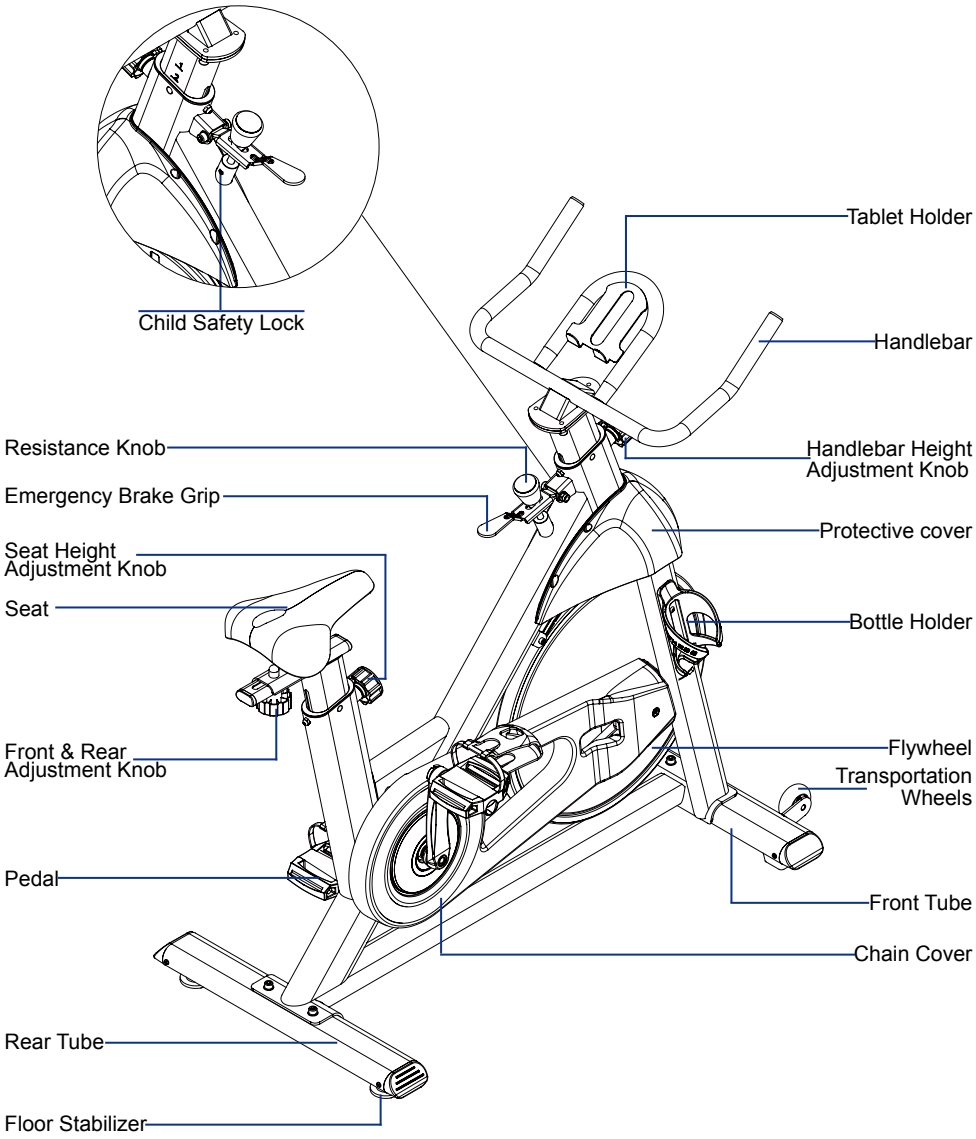

ASSEMBLY INSTRUCTIONS

Please confirm whether the parts are complete before installation.

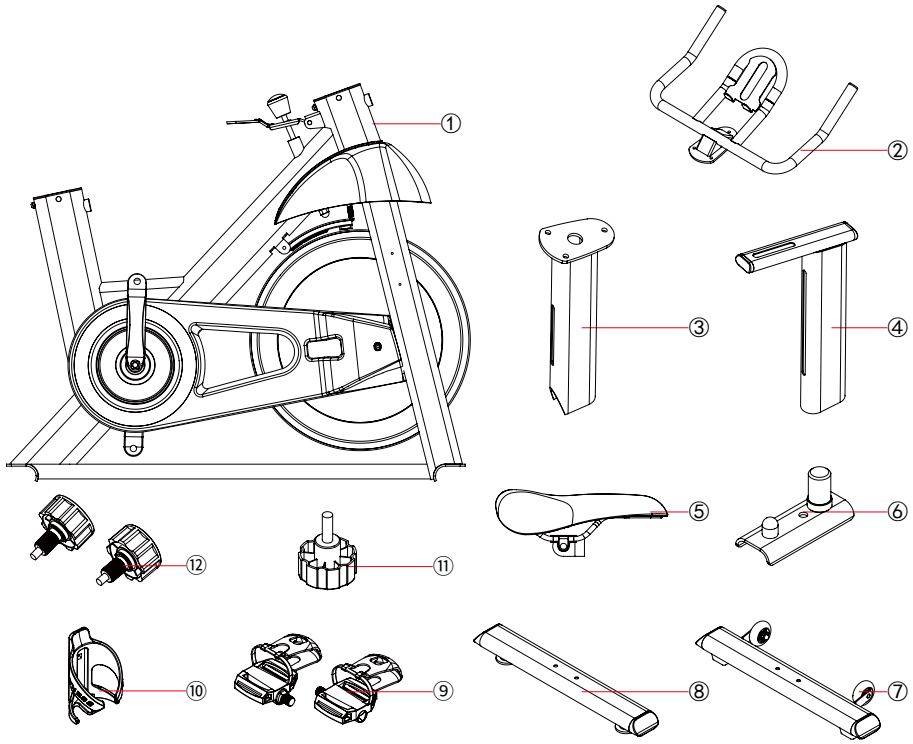

Parts list

NO.	Name	Quantity
1	Main Frame	1
2	Handlebar	1
3	Handlebar Post	1
4	Seat Post	1
5	Seat	1
6	Seat Slider	1
7	Front Tube	1
8	Rear Tube	1
9	Pedal(L/R)	2
10	Bottle Holder	1
11	Front & Rear Adjustment Knob	1
12	Seat/Handlebar Height Adjustment Elastic Knob	2

Parts List

❶ Hexagon socket head cap bolts M8 * 50mm(4pcs)	❺ Crescent wrench tightens the pedals	❾ Allen wrench (4#)
❷ Hexagon socket head cap screws M8*14mm（3pcs） (Including flat washer and elastic washer)	❻ Wrench（13#/16#）	
❸ Flat washer M8（4pcs）	❼ Wrench（17#/19#）	❿ Allen wrench（6#）
❹ Cross recessed pan head screws M5*16mm（2pcs）	❽ Phillips screwdriver	

ASSEMBLY INSTRUCTION

Before the installation, we sincerely recommend that you watch the instructional video first. (You can scan the QR code of our YouTube page or search ''Fitness MBH'' on YouTube to get the instructional video.)

1.Please prepare enough space for installation.

2.Open the package, take all parts out of the box and put them neatly on the ground.

ATTENTION: Please do not throw away the box before completing the installation and testing.

Step 1 Ground tube before and after assembly

Accessories: Front Tube Rear Tube Hexagon socket head cap bolts M8 * 50mm(4pcs) Flat washer M8（4pcs） Allen wrench（6#）

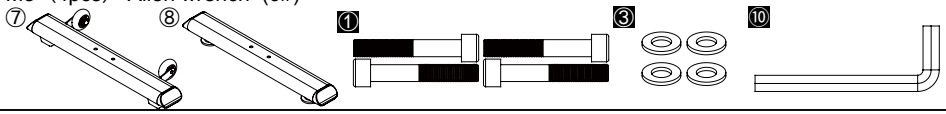

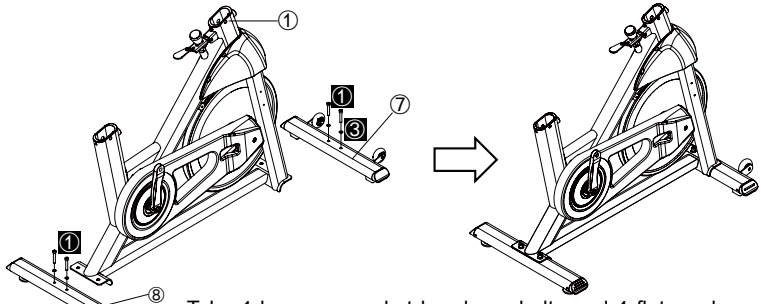

Take 4 hexagon socket head cap bolts and 4 flat washers to assemble the front and rear tube on the main frame respectively.(as the picture shows)

Step 2 Assemble the left and right pedals

Accessories: pedals (L, R), crescent wrenches, open-end wrenches (17#-19#)

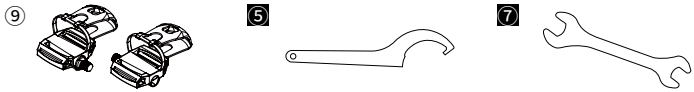

Take the pedals, thin nuts, crescent wrenches, and open-end wrenches, distinguish L/R according to the label, and install them on the corresponding crutches and tighten it, and use the crescent wrench to fasten the thin nut on the thread of the pedal. (as the picture shows)

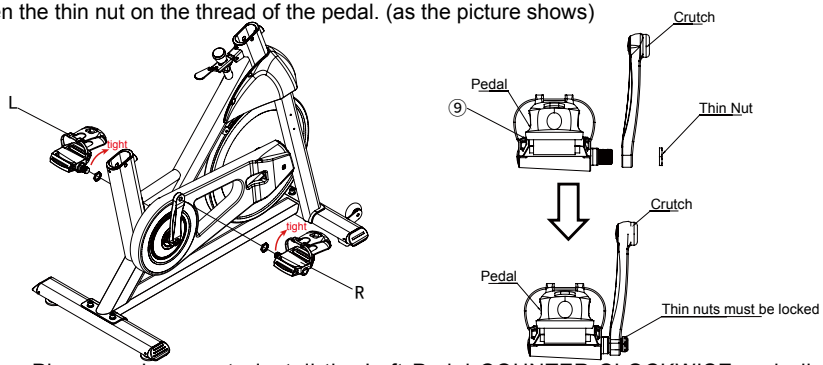

Warning: Please make sure to install the Left Pedal COUNTER-CLOCKWISE and all way in. Please make sure to install the Right Pedal CLOCKWISE and all way in.

If improper installation, the tread of Crutch will be stripped and there is a risk of the pedals falling.

If not tightened enough, there is also a risk of causing noise too.

Step 3 Assemble the adjustment seat core and the adjustment handle core

Accessories: handlebar, handlebar post, seat post, seat, seat slider, front&rear adjustment knob, hexagon socked head screw M8*14mm(including spring washer, flat washer) (3pcs), open spanner (13#-16#), Allen wrench (6#)

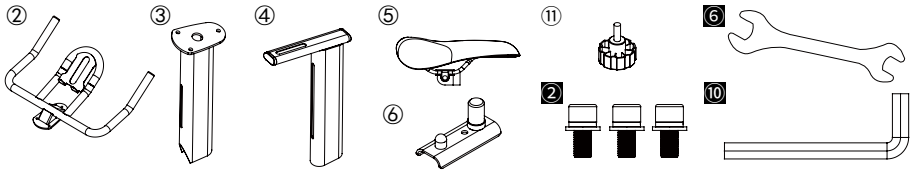

Take the front&rear adjustment knob, seat, seat slider and open-end wrench(12#-16#), assemble them and place them in an open place; take the handlebar, handlebar post and hexagon socked head screw M8*14mm (including spring washer and flat washer), assemble them and place them in an open place. (as the picture shows)

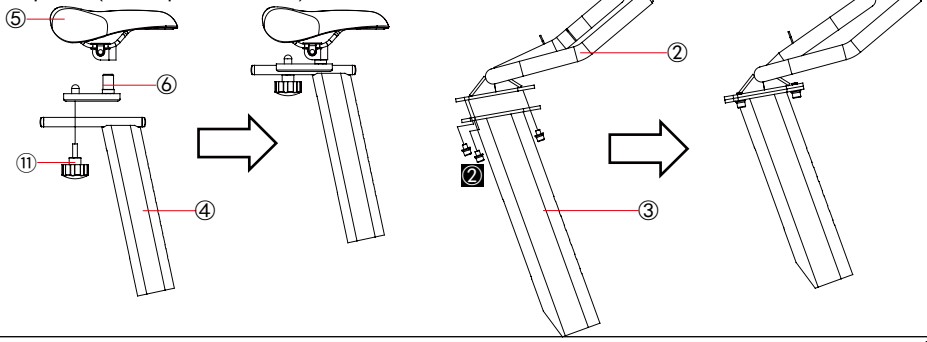

Step 4 Assemble the adjustment seat core and the adjustment handle core

Accessories: Seat/Handlebar Height Adjustment Elastic Knob(2pcs), Allen wrench(4#)

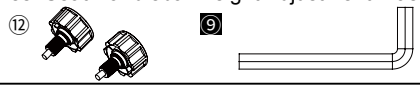

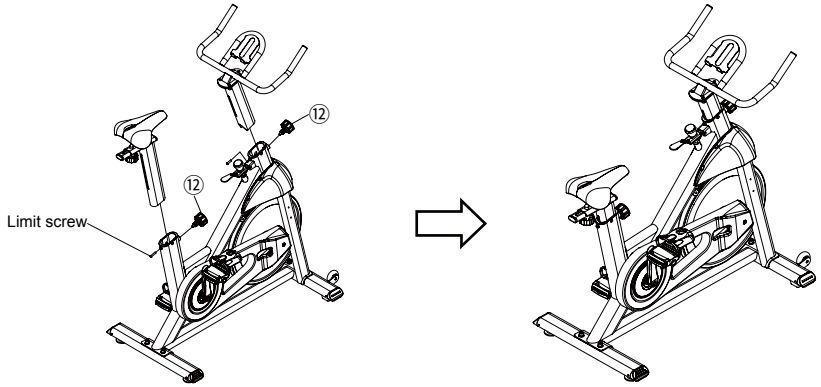

Take an Allen wrench to remove the limit screw, take the assembled adjustment seat core, adjustment handle core and elastic knob, and re-fasten the limit screw on the instrument with an Allen wrench. Tighten the adjustment knobs at last.

Attention: Choose the suitable position and make sure the adjustment knob is inserted into the hole.(There should be "pop" sound when the knob is inserted into the hole)

Step 5 Assemble the bottle holder

Accessories: bottle holder, cross recessed pan head screws M5*16mm (2 pcs), cross screwdriver

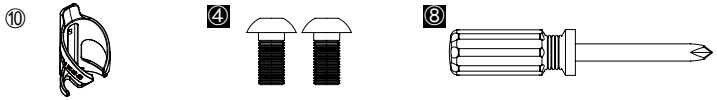

Take the bottle holder, cross screwdriver, cross recessed pan head screws (2 pcs), and fix it on the main frame. (as the picture shows)

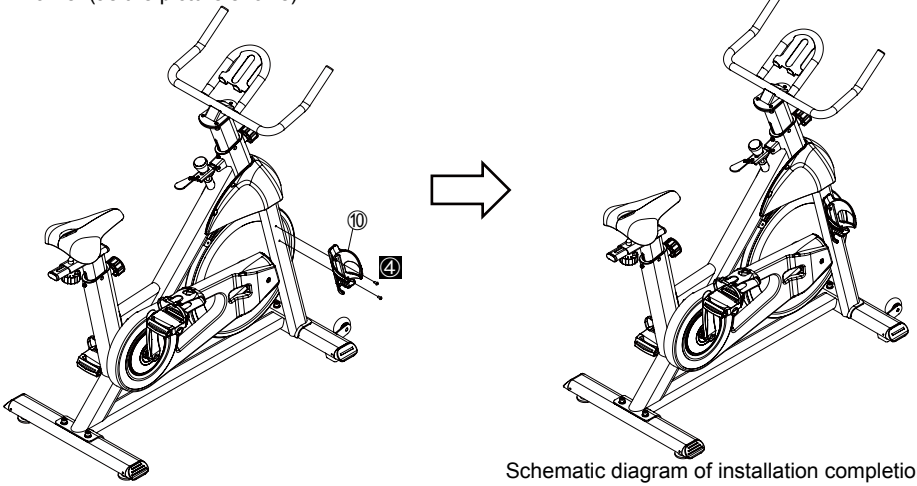

Schematic diagram of installation completion

Finally, you must reconfirm that the installation is correct according to the manual before you use it.

DEBUGGING

The debugging of indoor bicycles should pay attention to the following aspects:

1.The front and rear adjustment and up and down adjustment of the seat must be smooth.

2.Whether the shaking body is stable, if there is shaking phenomenon, the two adjustment bases of the rear tube can be adjusted accordingly to keep the body stable.

3.Before use, the stability of the seat and handlebar locking must be checked to ensure that it does not move up and down during use.

Test run the bicycle , and check that there is no abnormal sound during the running, and the resistance adjustment and brake system must be normal.

ADJUST THE BALANCE

In order to achieve a smooth and comfortable ride, you must ensure the stability of the bike is secured. If you notice that the bike is unbalanced during use, you should adjust the foot levelers located beneath the Floor Stabilizers(6). To do so, rotate Floor Stabilizers(6) until the bike is balanced.

ADJUST THE TENSION & EMERGENCY STOP

Adjust the tension by rotating the Resistance Knob(4) clockwise to increase the level of resistance. Rotate the Resistance Knob(4) counter-clockwise to decrease the level of resistance. Push down on Emergency Brake Grip(5) to enforce the brake and stop the bike immediately.

ADJUST THE SEAT

All knob should be tightened enough before you using this bike.

The front and rear distance of the seat and the up and down distance are adjusted Section method. The knob is rotated counterclockwise, pine open knob, the seat portion may be moved up and down. There should be “pop” sound when the knob is inserted into the hole.

Similarly clockwise to tighten the knob, the adjustment is completed. (Longitudinal seat adjustment sections: Clockwise is locked counterclockwise is released)

An appropriate seat height helps to ensure your exercise efficiency and reduce the risk of injury. Adjusting the seat forward or backward can help you work out different muscle groups.

With one pedal in the upward position, place your foot in the toe clip and get on the bike. If your leg is bent too much, you should move the seat up. If your foot cannot touch the pedal or your leg is too straight, you should move the seat down.

ADJUSTING THE HANDLEBAR

The height of handlebars can be adjusted by the section method. The knob is rotated counterclockwise, pine open knob, the handlebar portion may be moved up and down.There should be “pop” sound when the knob is inserted into the hole.

Similarly clockwise to tighten the knob, the adjustment is completed.

DISMOUNTING THE BIKE

WARNING! Do not dismount the bike or remove your feet from the pedals until the pedals have stopped completely. You can stop the flywheel at anytime by pushing down on Emergency Brake Grip(6).

ADJUSTING THE PEDAL STRAP

Place the ball of each foot in the toe clips so the front of your shoe fits snugly in the toe clip cage. Rotate one foot to within arm's reach and pull the strap until the toe clip cage fits your shoe snugly. Insert the strap back into the hoop of the toe clip. Repeat this for the other foot.

MOVING THE BIKE

To move the bike, first ensure that the handlebar is properly secured. If the handlebar is loose, tighten the Adjustment Knob(1) to secure it. Next, stand at the front of the bike so that you're directly in front of the handlebar. Firmly grasp and hold each side of the handlebar, place one foot on the front stabilizer and tilt the bike towards you until the transportation wheels on the front stabilizer touch the ground. With the wheels on the ground, you can transport the bike to the desired location with ease.

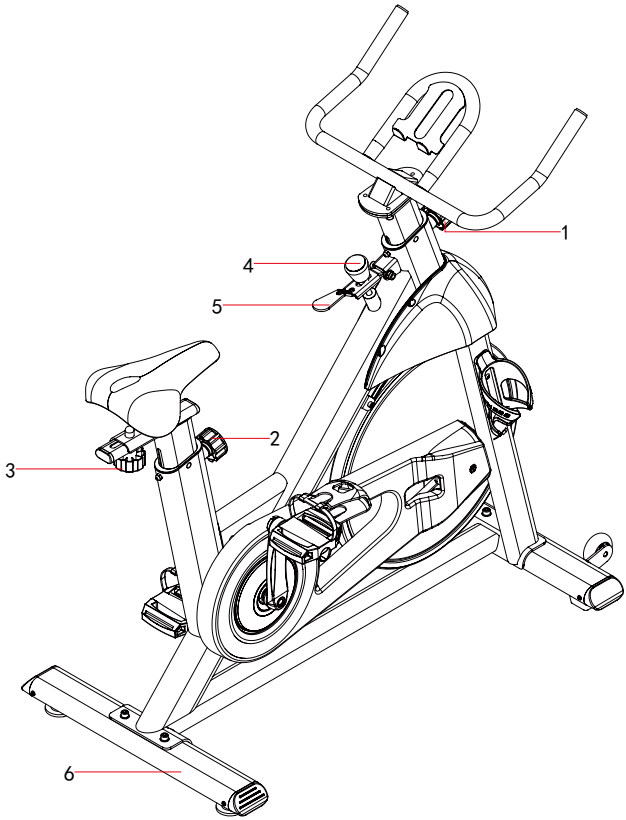

PRODUCT DESCRIPTION

Technical Reference number

Product ruler inches: 1125mm (L) * 550mm (W) * 1140mm (H)

44.3in(L)*21.65in(W)*44.88in(H)

Resistance system: Magnetically controlled resistance

Net weight: 35kg/77.16lbs

Gross weight: 41 kg/90.4lbs

User weight: ≤ 150kg/331lbs

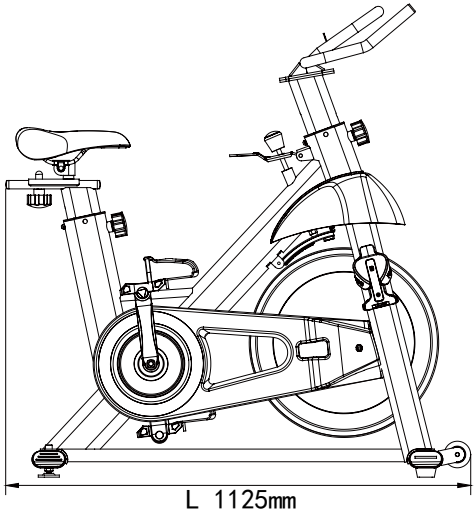

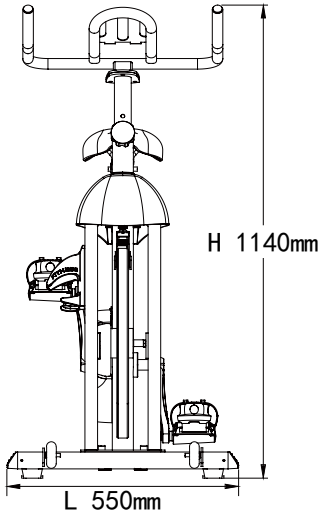

Machine function standard

Our product has passed the EN ISO 20957-1 and EN 957-10 general safety experiment.Our company reserve the right of technical improvement for this product,including picture and parameter.

Product Features

1. This is a new type of indoor bike that integrates training and exercise.The structure is scientific and the appearance is simple.Ergonomically designed makes your cycling more safe and comfortable.

2. Frame: The body adopts high-strength positive oval tube, simple and stylish, durable.

3. Transmission mode: belt transmission.

4. Inertia wheel: large cast iron wheel, covered with aluminum plate.

5. Resistance method: magnetic resistance. Resistance adjustment method: manual five-stage adjustment gear.

6. Armrest: HDR sheath tube is adopted , which makes the grip comfortable.
   The product is applicable to most fitness levels people.

7. Front ground tube: equipped with high-grade PU mobile wheels, safe and convenient to move. The adjustment of the seat frame is controlled by a digital strip, which can be adjusted to the user's desire s position. The surface is treated by a special process, which does not change color or rust.

BLUETOOTH INSTRUCTION

Step One, scan QR on the bike and download APP.

Step Two, After installation, use the APP scan the same QR
(Make sure cellphone Bluetooth is open)

Note : Before scanning, please ride the bike to activate Bluetooth function, then it is available to connect.

Click here and scan

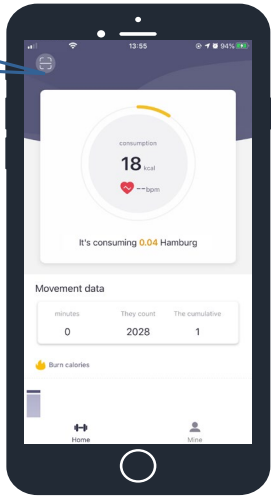

After scanning, you need to select the device ID and then connect.

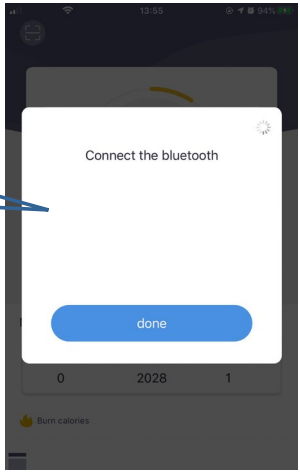

Battery replacement method for Bike Bluetooth

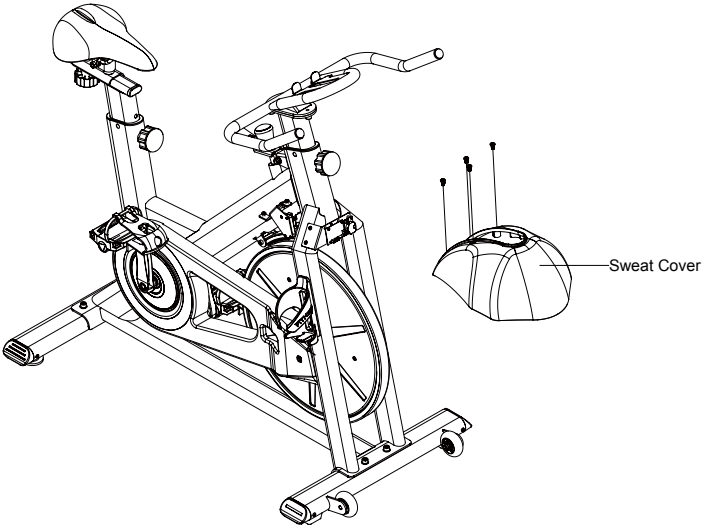

Take a Phillips screwdriver to remove the screws of the bicycle sweat cover and remove the sweat cover.

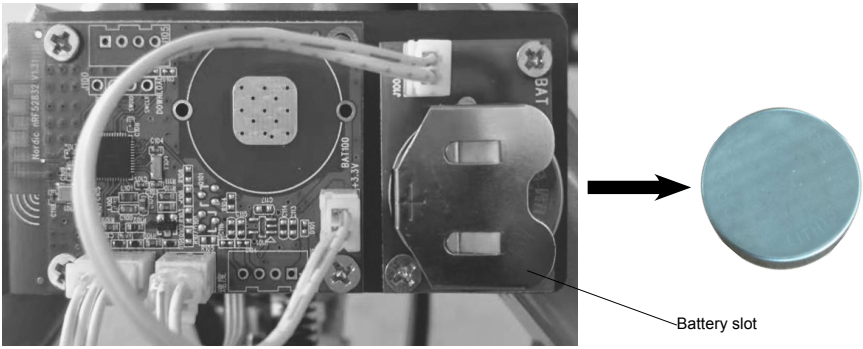

Remove the battery as shown in the picture above and replace it with a 3V battery of the same type. Connect to Bluetooth to check whether it is powered on. After confirming that the preparation is correct, take a Phillips screwdriver and reassemble the sweat cover in its original place.

BEGINNER'S GUIDE

Below we provide some suggestions and training methods. After using this product, you can improve your physical fitness and increase physical strength through the effect of exercise . Please refer to the following instructions. If you do not exercise regularly for a long time, please consult a doctor to understand your physical condition,Avoid personal injury.

Instructions

1. The bike is with a flywheel, which will cause personal injury when rotating at high speed. It is forbidden to touch the rotating flywheel in use. At the same time, the flywheel has a large inertia when rotating, and improper use may cause injuries such as muscle strain on the foot.
2. Before stopping, please slow down the cadence until you use the flywheel to stop turning completely before you can get off the train.
3. This bike has two locking devices, which are located at the front and rear adjustment knobs of the seat and the height adjustment knob of the seat, all should be tightened clockwise before training.
4. The height of the seat and the front and rear positions of the seat can be adjusted manually without using other tools.
5. The bike uses rubber sleeves to fix the feet. Please wear sports shoes before training, and put your feet into the rubber sleeves and tighten the straps.
6. When adjusting the height of the saddle, do not exceed the "STOP" position shown by the riser.

Exercise Amount

Choose the appropriate amount of exercise to achieve the maximum effect of exercise, however, the heart rate value is one of the main reference basis, please refer to the following notes about heart rate value:

Maximum heart rate value = 220- age

During exercise, the heart rate value should be maintained between 60% and 85% of the maximum heart rate value .

Fat Burning

During exercise when your heart rate reaches a maximum value of 60% of the time , the fat starts to burn.

To achieve the most suitable fat burning rate, you can moderately increase and maintain the heart rate value at 60% to Between 70% .

The best training condition is to exercise 3-4 times a week for 30 minutes each

time .

If you want to gradually increase the amount of exercise to strong training, the heart rate value needs to increase to 70% -85% of the maximum value . This training can be achieved after increasing the resistance value at a higher exercise frequency or a longer period.

EXERCISE Tips

First-time users can refer to the following methods to practice:

The first step: divided into three groups, 10 minutes riding → rest → 10 minutes riding → rest → 10 minutes riding → rest.

The second step: divided into two groups, 15 minutes riding → rest → 15 minutes riding→ rest.

Step 3: Divide into two groups, and gradually increase the time of each group, namely the riding time Starting from 15 minutes, gradually increase to 20 minutes, 25 minutes, 30 minutes.

The fourth step: a complete 45 minutes riding, when fully adapted to be used by adding resistance and a method to increase the difficulty cadence.

Frequency

Train at least three times a week. Appropriate selection of equipment that can increase thigh muscle strength, side waist and shoulder strength Practice. Spinning these few body parts required is relatively high, easily injured, so warm-up exercises for the respective exercise equipment and these parts are not necessarily be less.

If the aim is to lose weight, must be compatible with some of the exercise equipment while each practice when finished spinning, should also have a stretch of some of the sport similar to yoga.

Slow exercise

According to the effective muscle and metabolism slow-down exercise instructions, the most intense exercise Slow down gradually from 5 to 10 minutes. The slow movement of the elongated body likewise helps to avoid pain when the muscle.

Cycling method

1. Free riding method The so-called free riding method is a kind of riding that does not limit the time and the intensity of riding

OK. Its main purpose is to relax our nerves, muscles and breathing, which amounted to relieve physical and mental due to the life, work pressure caused by

fatigue.

2. There are two specific methods for the intensity riding method. One is to stipulate the riding speed (how many

Miles / hour), such as riding at a speed of 20 kilometers per hour for 30 minutes. Second, the rules given their riding speed pulse intensity control, such as per minute with 120 times the pulse to ride Walk for 30 minutes, this riding method is very stimulating to the heart and lungs, and can effectively exercise the human body Cardiovascular system.

3. Intermittent riding method

The specific method is to alternate between fast and slow riding, such as slow riding for 5 minutes, then fast riding 5 Fen Zhong , then slow ride 5 Fen Zhong , then fast riding 5 Fen Zhong , and so the cycle a few times (this method can effectively exercise the body's heart and lung function).

4. Powerful riding method

Spinning having different terrain conditions simulated exercise performance, as described above, downhill , etc., depending on the force to ride modes, can effectively improve the strength of the legs or the body of the endurance quality thereof. This approach will not only improve exercise capacity female legs, but also can effectively prevent the thigh bone disorders, and for the line of the legs is quite effective drops.

5. Aerobic riding method

Mainly medium-speed ride, generally ride 30 or so minutes, wrought by this method should also pay attention to strengthening a deep breath when refining, this method has the effect of weight loss, while cardiopulmonary improve function also has a very good role.

ROUTINE MAINTENANCE

*This indoor bike must be used on dry, ventilated and level ground.

*kept clean daily cycling , careful not to damp cloth , to prevent rust plating.

*Plating parts should be coated with anti-rust oil once every half a month.

*After each use, check whether all screws and adjusting handles are loose and fasten them in time.

*After each use, focus on checking whether the connection between the pedal and the foot is loose. If it is not fastened in time , a slipping phenomenon will occur , which will cause the pedal to loose and fall off , causing damage to the user. (Danger)

*Regularly replace the bicycle pedals every year to ensure the stability and reliability of the bicycle.

*When replacing the bicycle pedal, pay attention to the screw direction of the pedal. Align the screws, and do not tilt or damage the thread.

*See the table below for inspection, maintenance, maintenance and time period:

Maintenance care	Every week	Per month	And a half years
Cleaning: shield, outer	√		
Anti-rust: anti-rust parts			√
Check if the screw is loose	√		
Lubrication: bearing parts		√	

WARRANTY

1.Scope of warranty

Warranty scope: Non-artificial damage that occurs during normal use of the product under proper maintenance .

The warranty card is limited to the original purchaser and cannot be transferred.

2.The warranty period is one year from the date of purchase.

3.The following conditions are not covered by the warranty:

① Due to abuse , negligence , loss or unauthorized modification accidents caused by bad ;

② Damage caused by incorrect adjustment of bearings and drive belts;

③ The damage to equipment accessories caused by the inadequate user maintenance;

④ Damage caused by other illegal operations.

4.Contact us for support:

support@mbhfit.com

Please send us the following information for support:

Order ID

Warranty Card

Description of problems(Attaching photos and videos will be helpful)

Parts Number(Damage parts, lost parts or the parts you need a replacement)

Visit our factory
(Scan this QR code)

PARTS REQUEST FORM

Shandong MBH Fitness Co., Ltd.

EMAIL THIS FORM WITH YOUR RECEIPT OF PURCHASE TO support@mbhfit.com

ORDER ID:_____

NAME:_____

ADDRESS:_____

CITY:_____STATE:_____ZIP:_____

TELEPHONE: (Day)_____

(Night)_____

SERIAL#:_____

MODEL#:_____

PURCHASE DATE:_____

PLACE OF PURCHAASE:_____

PART#	DESCRIPTION	QTY

“YOUR ORDER WILL BE PROCESSED WITHIN 3 BUSINESS DAYS”

FCC Information and Copyright

This equipment has been tested and found to comply with the limits for a Class B digital device, pursuant to part 15 of the FCC Rules.
These limits are designed to provide reasonable protection against harmful interference in a residential installation. This equipment generates,
uses and can radiate radio frequency energy and, if not installed and used in accordance with the instructions, may cause harmful interference
to radio communications. However, there is no guarantee that interference will not occur in a particular installation. If this equipment does
cause harmful interference to radio or television reception, which can be determined by turning the equipment off and on, the user is
encouraged to try to correct the interference by one or more of the following measures:
—Reorient or relocate the receiving antenna.
—Increase the separation between the equipment and receiver.
—Connect the equipment into an outlet on a circuit different from that to which the receiver is connected.
—Consult the dealer or an experienced radio/TV technician for help.

This device complies with part 15 of the FCC Rules. Operation is subject to the following two conditions:
(1)This device may not cause harmful interference, and
(2) this device must accept any interference received, including interference that may cause undesired operation.

changes or modifications not expressly approved by the party responsible for compliance could void the user's authority to operate the equipment.

This equipment complies with FCC radiation exposure limits set forth for an uncontrolled environment .The device has been evaluated to meet general RF exposure requirement.
The device can be used in portable exposure condition without restriction.

Shandong MBH Fitness Co., Ltd.
Website: www.mbhfit.com
After Sales Support Email: support@mbhfit.com
After Sales Service Hotline: (+1)888-666-4018
Factory address: New Eastern Area, Ningjin County, Dezhou City, Shandong Province, China