VANGOA

VINYL RECORD PLAYER

USER MANUAL

Model : RP-01

CONTENT

Product Introduction---------- 1
Before Use----------2
Package List----------2
Product Overview---------- 3
Function Descriptions---------- 5
1.Connecting the External Speakers---------- 5
2.Using the LP Playback Mode---------- 5
3.Using the Bluetooth Mode---------- 6
4.Using the Headphone Mode----------6
5.Using the USB Flash---------- 7
Product Specifications---------- 7
Care and Maintenance----------8
1.How to replace the stylus----------8
2.How to clean the system----------8
Trouble Shooting----------8
Warranty Information----------9

Product Introduction

This is a vinyl record player with two independent speakers, with superior sound quality, it can support 7-inch, 10-inch, 12-inch records and 33RPM, 45RPM and 78 RPM three speed, it has three modes of Bluetooth, LP and USB playback, and mode switch comes with a beep and light indication.

Before Use

1. When choosing a location for the unit, avoid placing it in direct sunlight or close to a source of heat. Also avoid locations subject to vibrations and excessive dust, cold or moisture. Keep away from sources that hum, such as transformers or motors.
2. Do not open the cabinet as this may result in damage to the circuitry or electrical shock.
3. Be sure not to handle record with dirty fingers. Never play a record that has a crack on the surface.
4. When removing the power plug from the wall outlet, always pull directly on the plug, never pull the cord.
5. To protect the stylus, don't forget to put on the white protective needle cover after use.
6. Do not attempt to clean the unit with chemical solvents as this might damage the finish. Use a clean, dry cloth.
7. In order to shut off the power to this product completely, unplug the power cord from the wall outlet. Be sure to unplug the unit if you do not intend to use it for an extended period of time, such as a vacation.
8. Keep this manual in a safe place for future refere.

Package List

Note: Please check the items carefully after opening the package. And if there is anything missing or damaged, please do not hesitate to contact us immediately

•1* Turntable Player RP-01
•2* Additional Speakers
•1* 9V/1.3A DC Adapter
•1* Vinyl brush
•1* Record weight Stabilizer
•1* User Manual

Product Overview

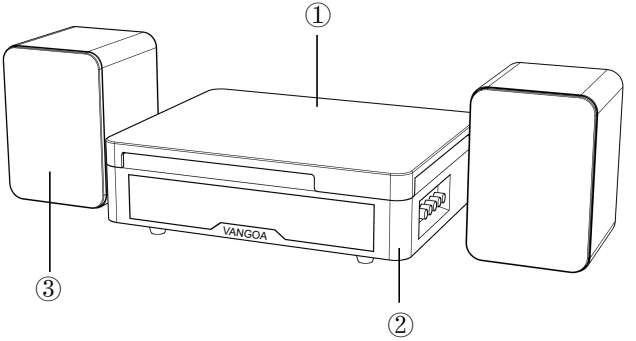

1 Removable Dust Cover

2 Turntable Player

3 Speakers

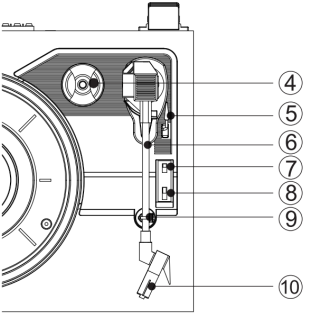

4 45RPM Adapter

5 Tonearm Raise Lever

6 Tonearm

7 Auto-stop Button

8 3-speed LP Select Button

9 Tonearm Lock

10 Stylus

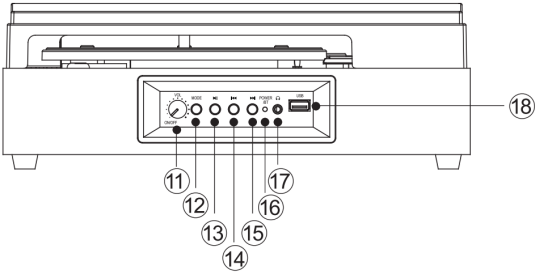

11 Rotary Knob (Power Button & Volume Control Button)
- Rotate R/L to turn ON/OFF
- Rotate R/L to turn up/down the volume

12 M-MODE: BT/USB

13 ▶II Play&Stop (Bluetooth/USB Mode)

14 ⏮ Next/Go Ahead (Bluetooth/USB Mode)

15 ⏭ Back (Bluetooth/USB Mode)

16 LED Indicator Light

17 Headphone Jack

18 USB Playback

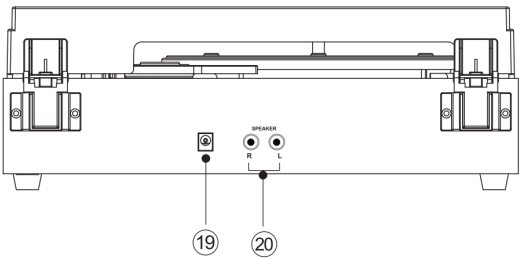

19 Power Adapter Port

20 Speakers Output Port

Function Descriptions

1.Connecting the External Speakers

- Use the red cable of the speaker to connect to “R”, and connect the white cable to “L”.

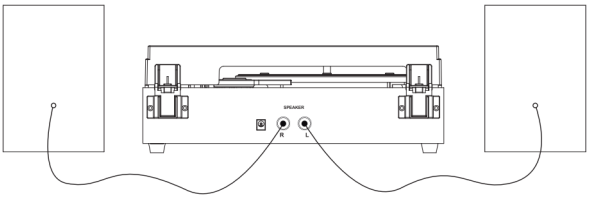

2. Using the LP Playback Mode

Note: Please release the lock before moving the tonearm and remove the stylus protector.

LP Playback Mode: When lifting up and moving the tonearm ⑥ to the player, the player will automatically switch to the **LP Playback** mode with the prompt tone “Di-dong” and the indicator light showing green, which indicates that it has successfully entered the **LP Playback** mode.

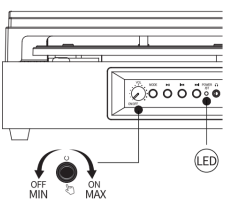

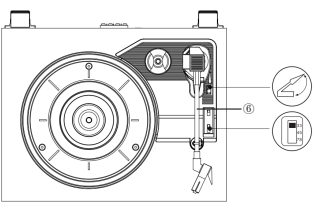

Note: When the product is turned off with the auto-stop swich, the turntable player will continue spinning, no matter whether playing a record or not.

Do not lower the tonearm manually onto the LP player in order to avoid damage to the player or the stylus ⑩.

Steps of playing a record:

1. Place the record of your choice on the turntable. If required, do not forget to place the adaptor on the record spindle.
2. Choose the desired playing speed using the speed selection switch between 33.3, 45 and 78rpm.
3. Turn on the Rotary Power Switch, note that this also controls volume.
4. Release the tone arm lock. Place the stylus vertically over the first track of the record, the turntable will start turning automatically.
5. The record could be controlled by auto-stop ON/OFF switch when it comes to the end.
6. Lift up the tone arm and put it on the rest when finished. Replace the protective cap on the stylus and close the tone arm lock.
7. Turn off power at mains.

3. Using the Bluetooth Mode

Bluetooth Mode:

- When the tonearm is in the arm holder, you can activate the **Bluetooth** mode. When the product is in the **Bluetooth** mode, the blue indicator light flashes quickly,which means it is now ready to pair.
- Please find the Bluetooth name“Vintage Turntable” on your Bluetooth-enabled device to connect it with your product. As Bluetooth pairs successfully, the blue indicator light remains on with the prompt tone :“Di-dong”.

4. Using the Headphone Mode

For private listening, connect the 3.5mm plug from the Earphone/Headphone**(not suppied)** into the **Headphone jack** on the side of unit. Sound from speakers will be auto cut.

5. Using the USB Flash

- Insert the USB flash to the port ⑱, the player will automatically play the digital audio stored in the USB flash.
- Press the ▶II button to play/pause as needed, and press the ⏮ or ⏭ button to play the previous or next song.

Product Specifications

Items	Descriptions
Item Model	RP-01
Drive System	Belt Drive
Rated Voltage (Adapter)	100-240V
Playback Speed	33 ⅓ RPM, 45RPM & 78RPM
Bluetooth Input	Yes
Bluetooth Output	No
Bluetooth Version	5.0
Bluetooth Effective Range	⩽10m
Frequency Response Range	100Hz-18KHz
Speaker Output Power	5Wx2
Speaker Impedance	4Ω
Operating Temperature Range	14°F-104°F (-10°C-40°C)
Adapter	DC 9V 1.3A

Care and Maintenance

1.How to replace the stylus

1. Push the arm lock to release the tonearm.
2. Take off cartridge cap to expose needle.
3. Lightly separate cartridge from the socket.
4. Take out audio-line from cartridge completely.
5. Fit new stylus reverse process, insert audio cable and install cartridge into socket.

NOTE: The jeweled stylus installed in your turntable should last for up to 300 hours of playback with 33 RPM albums or 45 RPM. If you are playing older 78 RPM records, which are made from a much harder material, the life expectancy of the stylus will be reduced.

2.How to clean the system

1. Use a soft dry cloth to wipe dust.
2. Keep the lid closed to protect the turntable components from dust.
3. A record cleaning brush can be used to remove dirt from the record's grooved surface.
4. If there is visible foreign matter on the tip of the stylus, please remove it carefully with a soft stylus-cleaning brush.

Trouble Shooting

When the playback sound becomes distorted and unsatisfactory:

1. Please confirm that no dust or lint has accumulated on the stylus tip.
2. If there is visible foreign matter on the tip of the stylus, please remove it with a soft stylus-cleaning brush. If there is no visible foreign matter on the stylus and the sound is still unsatisfactory, it is likely that the stylus is worn and needs to be replaced.

When the turntable is not spinning:

1. Check whether the belt is loose, if loose, just re-set on or replace the belt.
2. Check whether the motor is working, if the motor stops working, please contact VANGOA customer service CS@vangoa.com, we will give you a solution.

Warranty Information

Warranty Exclusions

• Any defects caused or repairs required as a result of abusive operation, negligence, accident, improper installation or inappropriate use as outlined in the owner's manual.

• Any VANGOA product tampered with, modified, adjusted, or repaired by any party other than VANGOA.

• Any cosmetic damage to the surface or exterior that has been defaced or caused by normal wear and tear.

• Any damage caused by external or environmental conditions, including but not limited to, transmission line/power line voltage or liquid spillage.

• Any product received without an appropriate model and serial number.

• Any products used for rental or commercial purposes.

• Any installation, set up and/or programming charges.

• Defect or damage as a result of connecting a product to an outlet with the incorrect voltage.Voltage converters must be used where applicable.

• Consumable parts including, but not limited to, batteries, styli, and rubber belts.

If you have any questions, please contact CS@vangoa.com

FCC Statement

This equipment has been tested and found to comply with the limits for a Class B digital device, pursuant to part 15 of the FCC Rules. These limits are designed to provide reasonable protection against harmful interference in a residential installation. This equipment generates, uses and can radiate radio frequency energy and, if not installed and used in accordance with the instructions, may cause harmful interference to radio communications. However, there is no guarantee that interference will not occur in a
particular installation. If this equipment does cause harmful interference to radio or
television reception, which can be determined by turning the equipment off and on, the user is encouraged to try to correct the interference by one or more of the following measures:

—Reorient or relocate the receiving antenna.

—Increase the separation between the equipment and receiver.

—Connect the equipment into an outlet on a circuit different from that to which the receiver is connected.

—Consult the dealer or an experienced radio/ TV technician for help.

This device complies with part 15 of the FCC Rules. Operation is subject to the following two conditions: (1) This device may not cause harmful interference, and (2) this device must accept any interference received, including interference that may cause undesired operation.

Caution

Any changes or modifications not expressly approved by the party responsible for compliance could void the user's authority to operate the equipment.

FCC Radiation Exposure Statement

This equipment must be installed and operated in accordance with provided instructions and the antenna(s) used for this transmitter must be installed to provide a separation distance of at least 20 cm from all persons and must not be co-located or operating in conjunction with any other antenna or transmitter. End-users and installers must be provide with antenna installation instructions and transmitter operating conditions for satisfying RF exposure