Gosun

便携布网蓝牙音箱

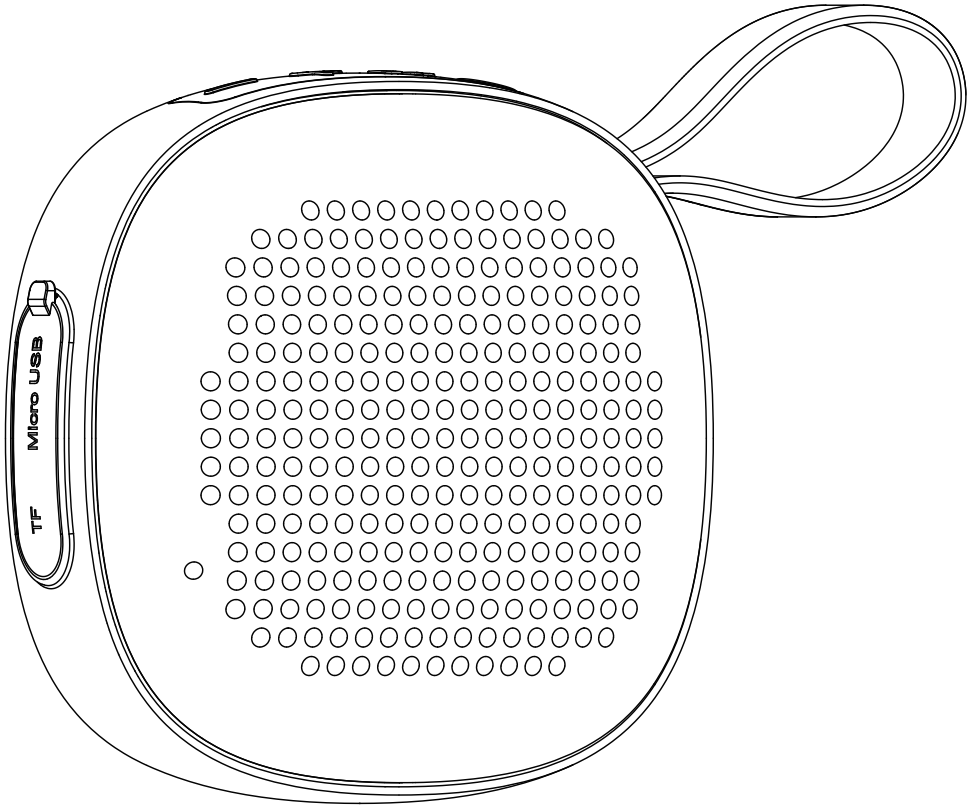

EN 操作说明

感谢你选用我们的蓝牙音箱。为了让您轻松体验本产品，请仔细阅读使用说明书。另外，也请您了解清楚您的播放设备如手机，带蓝牙功能的音频播放器等设备的蓝牙相关功能。

产品示意图:

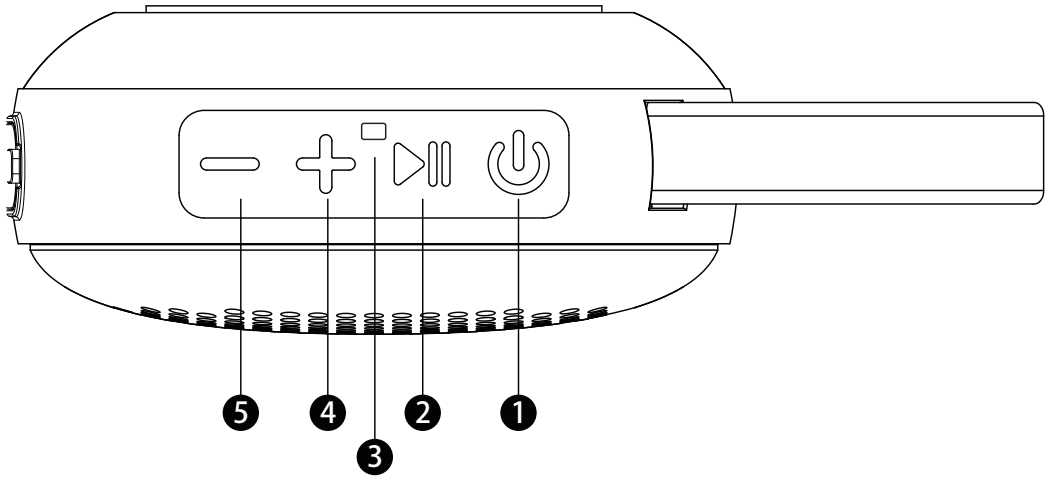

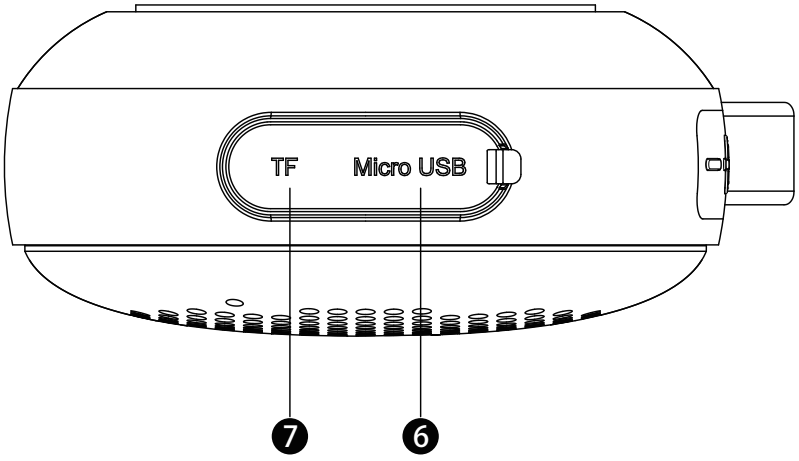

按钮介绍：

❶ 音箱开关键

❷ 播放/暂停

❸ 指示灯

❹ 音量+/下一首：长按为下一首，短按为调高音箱音量

❺ 音量-/上一首：长按为上一首，短按为调低音箱音量

❻ Micro USB充电口

❼ TF内存卡插槽

一、操作说明

1、蓝牙配对

1.1长按蓝牙音箱电源开关键，蓝牙音箱在开启后会有提示音，蓝灯快闪代表蓝牙音箱已经进入蓝牙搜索状态；

1.2打开手机蓝牙或其他蓝牙设备，搜索到EBS-303蓝牙名，点击进行配对；

1.3配对成功后，蓝牙音箱LED灯慢闪。

2、音乐播放

2.1单击播放暂停键可以播放或暂停音乐，长按播放暂停键取消手机与音箱蓝牙连接。

2.2单击加减键使音量增加与减小，长按加减键切换上下曲。

3、电话接听/拨打操作

3.1蓝牙音箱配对成功后，在产品上双击播放暂停键，将回拨电话里面最后一次呼出电话号码，短按挂断；

3.2蓝牙音箱配对成功后，有电话呼入时，长按拒接，短按暂停键接听，接听后重按一次挂断。

4、TF卡播放

4.1将TF卡插入卡槽位，当出现语音提示音时，音箱将自动播放TF卡内音乐，音箱自动读取卡内音频文件，用户可以使用音箱按键控制音乐播放。

5、音箱充电

5.1使用配置充电线进行充电，充电电压为DC5V，充电时红灯长亮，充满时红灯灭。

6、自动关机

6.1音箱开机后无连接任何蓝牙设备，10分钟后会自动关机.

6.2音箱开机连接蓝牙设备后无播放音乐，20分钟后会自动关机.

说明：音箱底部带有强磁，可以吸附平面的金属，在有金属的地方不用挂钩，可直接吸附在金属面上听音乐。

二、重要安全信息

在使用蓝牙音箱之前，你需要确认遵守以下基本的安全提示，以保证产品的安全可靠的使用：

1、阅读并了解所有的安全指引。

2、请使用能够提供输出电压DC5V/800-1000MA充电设备，以免造成损坏。

3、产品采用内置锂电池，在不使用时请关机。

4、不可让产品靠近高温的热源，不可高温烧烤或吹干。

5、不可让产品跌落或受到重击，或在上面施加重压。

三、包装物品清单

包装盒装包括以下物品，如有缺失请向销售商联系：

1、EBS-303蓝牙音箱：1台

2、USB充电线：1条

3、说明书：1本

Gosun

Portable Fabric Wireless Speaker

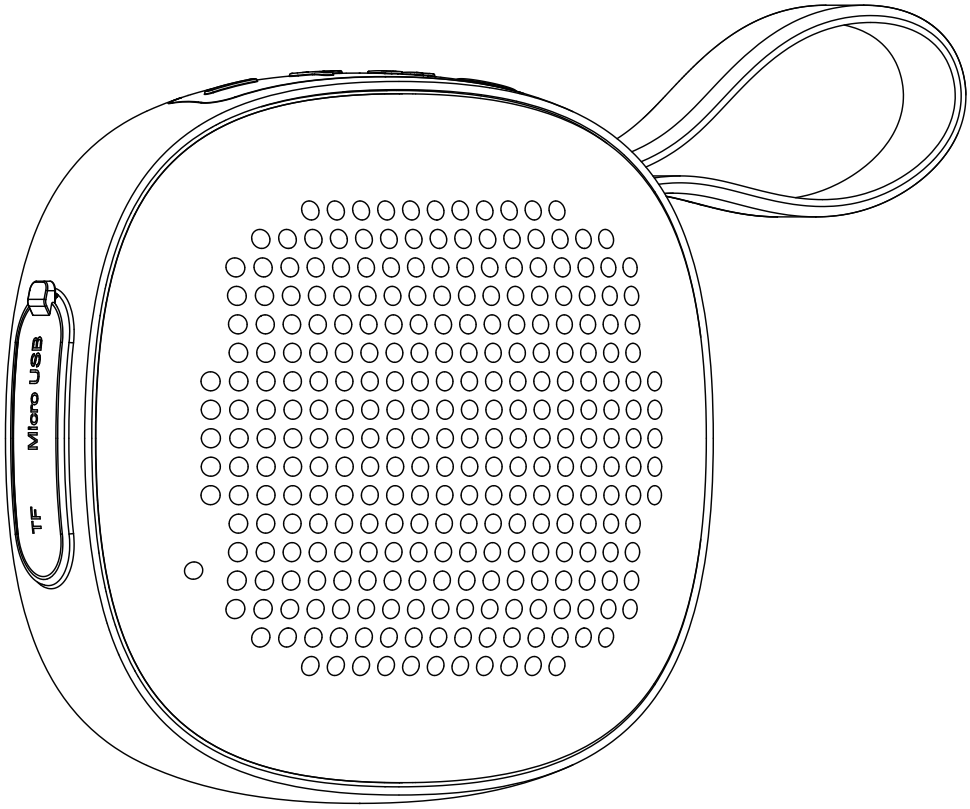

EN User's Manual

Thanks for purchasing our Bluetooth Speaker. This manual will give you better use of this Bluetooth speakers. Please carefully understand the Bluetooth function of your playback device before using this Bluetooth speakers.

Product Overview:

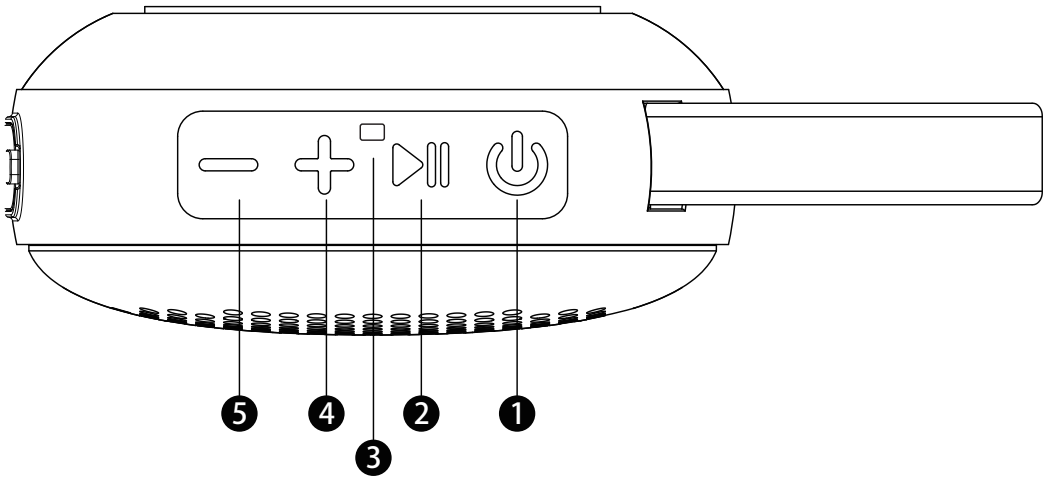

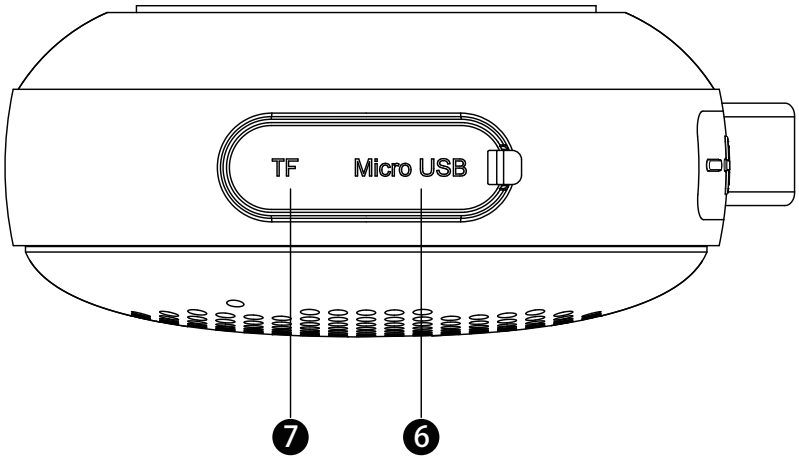

Buttons introduction:

❶ Power button: ON/OFF

❷ Play/Pause/ Bluetooth/Hand-free

❸ Indicator light

❹ Vol+/ Next track

❺ Vol-/ Previous track

❻ Micro USB charging port

❼ TF card slot

How to use this speaker:

Connecting the Bluetooth device:

1. Enter Bluetooth status automatically after long press the “Power” button, the blue indicator light blinks quickly.
2. Turn on the Bluetooth function of your mobile phone or other Bluetooth devices, search for “EBS-303” on your device’s Bluetooth list and then pair it. The indicator light blinks slowly after pairing successfully.
3. You can short press the Play/Pause button to play or pause the music. Long press “+” for next track or “-” for previous track. Short press “+” or “-” for volume up or volume down.

4. Long press “Play/Pause” button to disconnect the speaker from the current device and reset it into pairing mode.

Hands free function:

This speaker has a built-in microphone. Therefore, you may use it to answer telephone call as a hands-free device.

1. When the speaker is playing music via Bluetooth, the music will pause and you will hear the ringtone in case of any incoming call, you can short press the “Play/Pause” button to answer the call via built-in MIC.
   Short press the “Play/Pause” button again if you want to hang up the call after conversation.
2. You may long press the “Play/Pause” button to decline an incoming call if you don’t want to answer the call.

Mp3/ TF card mode

1. Turn on the speaker, Insert a TF card with music files (mp3) into the TF card slot of the speaker.
2. The speaker will change to “Mp3” mode automatically and the blue indicator light turns on.
3. You may control it by using Play/Pause, Volume +/- buttons.
4. You may short press “Power” button to back to Bluetooth mode at any time.

True Wireless Stereo (TWS) Technology:

If you have two of these Bluetooth Speakers, you can use them together as 2.0 stereo speakers. Be sure neither speaker is paired to a device before you connect them together. Press and hold the “Play/Pause” button to disconnect the speaker from the current device and reset it into pairing mode. Please make sure the 2 speakers are not placed more than 5 meters / 16 feet from each other when paring.

1. Press the “Power” button to turn on speaker number 1.
2. Press and hold the “Play/Pause” button to enter the Stereo Pairing mode.
3. The blue indicator light will blink quickly.
4. To pair the speakers together, next you need to press the “Power” button to turn on speaker number 2.
5. Speaker 2 will automatically search for the other speaker and connect with it.
6. When the speakers are connected the blue indicator light on the speaker number 1 will blink quickly and the 2nd speaker will blink steadily.
7. To connect your device to these two speakers, you will need to turn on the Bluetooth function of your device.
8. Search for “EBS-303” on the wireless list and then pair with it. If you need to input a pairing code, use 1234 or 0000.
9. The indicator light of the number 1 speaker will blink slowly after the pairing is successful.

10. To turn off the True Wireless Stereo mode, press and hold the “Play/Pause” button of any of the speaker.

Charging:

Connect the USB cable to an USB power adapter, then plug the micro USB into the micro USB port of the speaker. While charging, the indicator light is always in red. When it is full charged, the indicator light turns off.

Magnetic Adsorption (optional):

This speaker built-in magnet in the bottom. It could be absorbed on the metal surface like fridge at will. Play with ideas and create your interesting life.
Please make sure NOT TO put it near the electronics products like hard disk and CRT monitor. It might damage these kinds of products.

ECO model:

If there is no connection within 10 minutes after power on, the speaker will automatically power off.

Troubleshooting:

Q: The speaker is in the Bluetooth list of your playback device, but it could not be connected successfully.
A: Please long press “Play/Pause” button to reset the Bluetooth connection and try to connect it again.

Q: The wireless connection is not stable. Music interrupts from time to time.
A: Sometimes the other wireless signals will disturb the connection stability.

1.Please make sure the connection distance is not more than 20 meters and there is no block between the speaker and the device.
2.Make sure there is no other wireless devices such as wireless Router near the speaker.
3.Make sure the speaker has enough power.

NOTE: This equipment has been tested and found to comply with the limits for a Class B digital device, pursuant to part 15 of the FCC Rules. These limits are designed to provide reasonable protection against harmful interference in a residential installation. This equipment generates uses and can radiate radio frequency energy and, if not installed and used in accordance with the instructions, may cause harmful interference to radio communications. However, there is no guarantee that interference will not occur in a particular installation. If this equipment does cause harmful interference to radio or television reception, which can be determined by turning the equipment off and on, the user is encouraged to try to correct the interference by one or more of the following measures:

- Reorient or relocate the receiving antenna.
- Increase the separation between the equipment and receiver.

-Connect the equipment into an outlet on a circuit different from that to which the receiver is connected.

-Consult the dealer or an experienced radio/TV technician for help

Changes or modifications not expressly approved by the party responsible for compliance could void the user's authority to operate the equipment.

This device complies with Part 15 of the FCC Rules. Operation is subject to the following two conditions:

(1) this device may not cause harmful interference, and (2) this device must accept any interference received, including interference that may cause undesired operation.