BULLDOG BUGGY

SHARPER IMAGE®

6+

CONTENTS

1 Bulldog Buggy
1 Remote Control
1 USB-C Cable

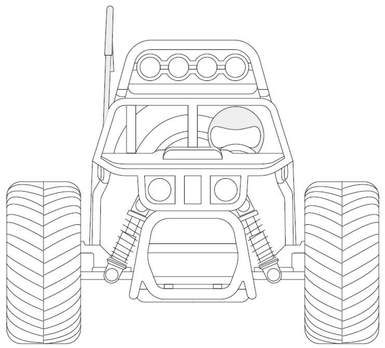

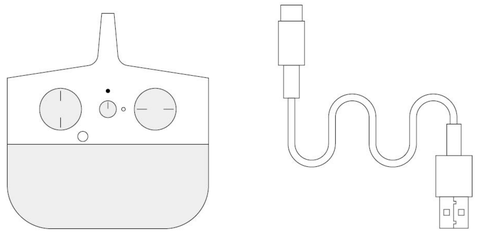

BATTERY INSTALLATION

The buggy includes a built-in rechargeable battery (included). The remote control requires 2 AAA 1.5V batteries (not included).

1. Use a Phillips-head or cross screwdriver to loosen the screw securing the battery cover on the bottom of the remote.
2. Insert the batteries, ensuring the correct polarity as per the diagram on the battery compartment.
3. Replace battery cover and tighten the screws after installation.

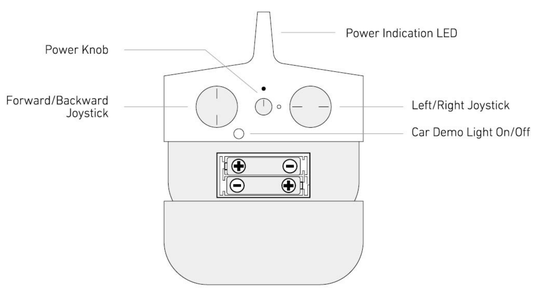

REMOTE OPERATION

1. The left joystick controls forward and backward direction. The right joystick controls left and right direction.
2. While the buggy is moving forward, the headlights light up. If the buggy is in backward the headlights will stay off.
3. Press the "Light On/Off" button to turn the Top LED lights of buggy on or off.

CHARGING THE BATTERY

The BULLDOG BUGGY uses an internal rechargeable battery and is not replaceable. If the battery no longer stays charged, dispose of it properly according to local disposal requirements.

CAUTION: If the rechargeable battery leaks fluid, dispose of the vehicle immediately. Do not allow fluid to come in contact with skin or eyes.

1. Make sure the power switch located at the bottom of the buggy is turned to the off position.
2. Insert the USB-C cable into the port located at the bottom of the buggy. IMPORTANT: Do not use excessive force when connecting the USB-C cable. If there is resistance, check alignment and try again.
3. Connect the other end of the USB-C cable into your charging source. The LED indicator turns on while the buggy is charging and is green when the buggy is fully charged.
   Note: The average charging time is approximately 1.5 hours (via 5.0V/1A USB wall charger).
4. The LED indicator on the remote will begin to flash when the buggy's battery needs to be recharged. The buggy will run for up to 15 minutes on a full charge.

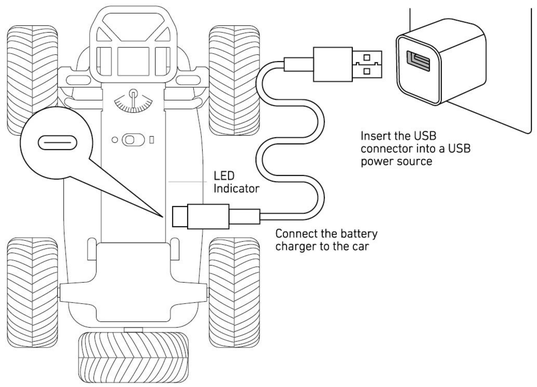

Sharper Image® name and logo (including the 77 logo) are trademarks or registered trademarks. Distributed by and © 2022 MerchSource, LLC. Irvine, CA 92618. All rights reserved.

Model Number: 1015441

FOR CUSTOMER SUPPORT, PLEASE CALL

1-800-374-2744

Printed in China

BULLDOG BUGGY

SHARPER IMAGE®

6+

PAIRING

Your BULLDOG BUGGY utilizes an automatic 2.4GHz digital channel selection system that allows up to 10 individual players to race side by side in the same wireless range without interference.

FOR SOLO DRIVERS

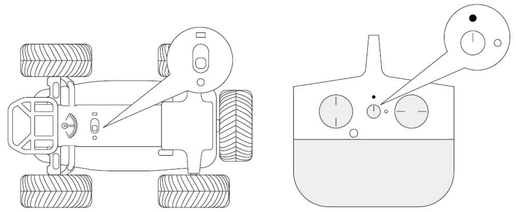

1. Before starting, make sure the power switches for both the remote control and buggy are turned off.
2. Turn on the remote control by moving the on/off power switch to on. The LED indicator light will start flashing slowly indicating that the remote control is ready for syncing.
3. Next, turn on the buggy and set it down on a flat surface. The car dome LED lights will be flashing slowly indicating that the buggy has power and is ready for syncing
4. Both the remote control and buggy should stop flashing once successfully paired. The remote control LED indicator will be solid indicating it is in standby mode and ready for use.
5. If pairing is unsuccessful the remote control and buggy will go into sleep mode. Wait 60 seconds, then turn off both the remote control and buggy and repeat steps 1 - 4.
6. If the remote control and buggy have not been used for 5 or more minutes, both will turn off and need to be restarted.

FOR MULITPLE DRIVERS

1. Make sure to power off all RCs and controllers.
2. One by one, each player should sync their RC and controller by following the steps listed in the Solo Drivers section.
   IMPORTANT: After syncing each RC, make sure to leave each vehicle on until all players have completed the syncing of their RCs.
3. If there are problems syncing any vehicle, all drivers should turn off their controllers and RCs and restart the process.

SAFETY PRECAUTIONS

- Do not use people or animals as obstacles.
- Never operate your vehicle in inclimate weather, rain, or standing water.
- Keep fingers, hair and loose clothing away from wheels while vehicle is in motion.
- Do not expose to extreme temperatures.
- Do not leave vehicle or transmitter near sources of heat or under direct sunlight for long periods of time.
- Adult supervision is recommended when operating the vehicle.
- Thoroughly inspect products before every use. If the product appears worn, frayed/splintered, cracked, or broken in any manner, discontinue use and discard immediately.

BATTERY WARNINGS

- Do not mix old and new batteries.
- Do not mix alkaline, standard (carbon-zinc), or rechargeable batteries.
- Alkaline batteries are recommended. Use only the specified voltage.
- Insert batteries using the correct polarity. Always use, replace, and recharge (if applicable) batteries under adult supervision.
- Do not charge with non-rechargeable batteries.
- Do not short-circuit the battery supply terminals.
- Do not dispose of batteries in fire, batteries may explode or leak.
- Remove batteries before storing.
- Recycle or dispose of batteries according to federal, state, and local laws.
- Keep these instructions for future reference.

Rechargeable Battery Warnings:

- There is a risk of fire and personal injury if battery is punctured, damaged, or misused.
- Do not dismantle, crush, incinerate or short-circuit battery.
- Never expose battery to extreme temperatures or moisture.
- Keep away from flammable materials and direct sunlight.
- Only charge using the provided charger, cable, and/or adapters.
- Rechargeable battery is only to be charged by an adult.
- Adult Supervision of the battery while it is charging is required.
- Allow battery to cool to room temperature before charging.
- Charge on a non-flammable surface and keep away from flammable products.
- Discontinue charging if battery becomes hot, swells, smokes, or gives off a strong odor.
- Battery chargers used with the product are to be regularly examined for damage to the cord, plug, enclosure, and other parts, and in the event of such damage, they must not be used until the damage has been repaired.
- Recycle or dispose of battery according to federal, state, and local laws.
- Keep these instructions for future reference.

This device complies with Part 15 of the FCC Rules. Operation is subject to the following two conditions: (1) this device may not cause harmful interference, and (2) this device must accept any interference received, including interference that may cause undesired operation.

Warning: Changes or modifications to this unit not expressly approved by the party responsible for compliance could void the user's authority to operate the equipment.

NOTE: This equipment has been tested and found to comply with the limits for a Class B digital device, pursuant to Part 15 of the FCC Rules. These limits are designed to provide reasonable protection against harmful interference in a residential installation. This equipment generates, uses and can radiate radio frequency energy and, if not installed and used in accordance with the instructions, may cause harmful interference to radio communications.
However, there is no guarantee that interference will not occur in a particular installation. If this equipment does cause harmful interference to radio or television reception, which can be determined by turning the equipment off and on, the user is encouraged to try to correct the interference by one or more of the following measures:
- Reorient or relocate the receiving antenna.
- Increase the separation between the equipment and receiver.
- Connect the equipment into an outlet on a circuit different from that to which the receiver is connected.
- Consult the dealer or an experienced radio/TV technician for help.