V1.0

EID10 Alpha USER MANUAL

ID Secure LLC

ENGLISH

Copyrights

The products described in this document may include copyrighted computer programs. Laws in countries preserve for certain exclusive rights for copyrighted computer programs.

Accordingly, any copyrighted computer programs contained in the products described in this document may not be copied or reproduced in any manner without the express written permission.

© 2023 ID Secure LLC All Rights Reserved

No part of this document may be reproduced, transmitted, stored in a retrieval system, or translated into any language or computer language, in any form or by any means, without the prior written permission.

Furthermore, the purchase of our products shall not be deemed to grant either directly or by implication, estoppel or otherwise, any license under the copyrights, patents or patent applications, except for the normal non-exclusive, royalty-free license to use that arises by operation of law in the sale of a product.

Disclaimer

Please note that certain features, facilities, and capabilities described in this document may not be applicable to or licensed for use on a particular system, or may be dependent upon the characteristics of a particular mobile subscriber unit or configuration of certain parameters.

Please refer to your contact for further information.

Table of Contents

Copyright 2

Table of Contents 3

Overview 4

Getting Started 6

Using the NFC 8

Using the Fingerprint Reader 9

FCC compliance information
THIS DEVICE COMPLIES WITH PART 15 OF THE FCC RULES.
Operation is subject to the following two conditions:
(1) This device may not cause harmful interference, and
(2) This device must accept any interference received, including interference that may cause undesired operation.
Note: This equipment has been tested and found to comply with the limits for a Class A digital device, pursuant to part 15 of the FCC Rules. These limits are designed to provide reasonable protection against harmful interference when the equipment is operated in a commercial environment. This equipment generates, uses, and can radiate radio frequency energy and, if not installed and used in accordance with the instruction manual, may cause harmful interference to radio communications. Operation of this equipment in a residential area is likely to cause harmful interference in which case the user will be required to correct the interference at his own expense.

Modifications not expressly approved by the manufacturer could void the user's authority to operate the equipment under FCC rules.

This appliance and its antenna must not be located together or operated in conjunction with any other antenna or transmitter.
A minimum separation distance of 20 cm must be maintained between the antenna and individuals for this appliance to satisfy the RF exposure requirements.

Overview - Specification

General Characteristics	Dimensions	78mm/3.07inch(W) x 112mm/4.41inch(H) x 30mm/1.18inch(D)
	Weight	164g
	Communication	C Type USB Host : USB2.0 High Speed / 18PIN (USB Client/Host)
DATA CAPTURE	Fingerprint Reader	IB DANNO FAP 30 TFT PIV Certified Sensor Type : Light-emitting sensor (LES) TFT camera Resolution : 500 ppi Gray Scale : 256 grayscale dynamic range Image Size : 400W x 500H pixels Supported Image Formats : RAW, JPEG2000, BMP, PNG, WSQ FBI Certification / Image Certifications : PIV 071006, FIPS 201, FAP 30 Speed : Minimum frame rate > 10FPS Capture Types : Single-finger flat
	HID RFID Reader	HID OMNYKEY 5127CK-MINI 13.56 HF / 125K LF RFID ISO14443A/B ISO15693, FeliCa™ (IDm), CEPAS (CSN) Broad Credential Support NFC support for Mobile devices Dual frequency allowingsimultaneous support f or HF and LF credentials HID Prox, Indala® and EM Prox,iCLASS, iCLASS SE®, iCLASS Seos®, MIFARE Classic®, MIFARE DESFire EV1®iCLASS SE Processor Provides support for processing of PACS data and secure keystorage and communication
User Environment	Operating Temp	-0°C ~ 50°C (-32°F ~ 122°F)
	Storage Temp	-20°C ~ 60°C (-4°F ~ 140°F)
	Humidity	Non-condensing, 93%
	Drop	1.5m (5ft.)
Compatible Device		RP1500, RP1600, RP1600X

Overview – Package / Device Features

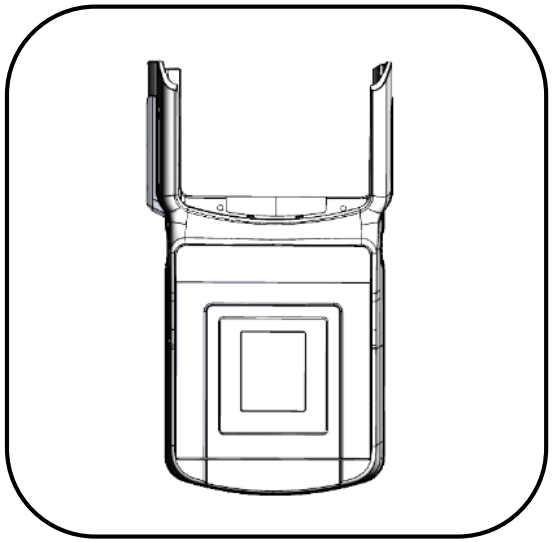

EID10 Alpha

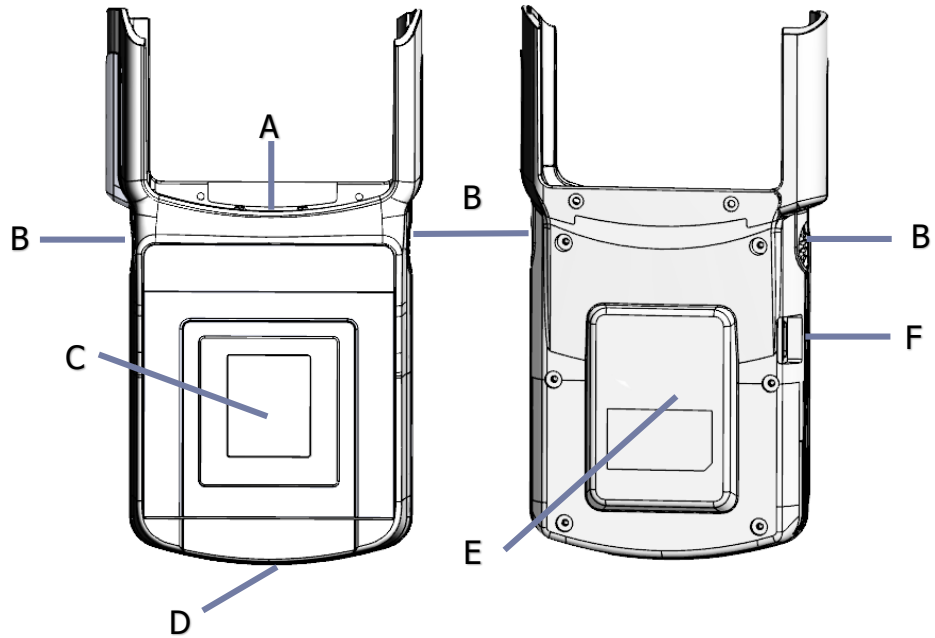

A. Device IO Connector
B. Device Locker
C. Fingerprint Reader
D. Cradle IO Connector
E. HID RFID Reader
F. USB C connector

Getting Started - Installing device

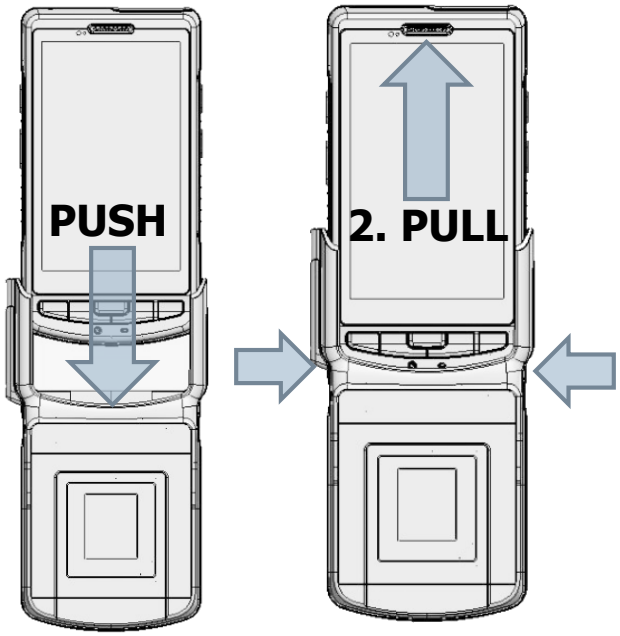

Installing the device

Attach the EID10 Alpha to the device as shown picture.

Insert the device down until the device latch snaps into place.

Removing the device

Pushing the lockers on both sides of EID10 Alpha, pull the device out from the EID10 Alpha.

Getting Started - Charging & Cradle Interface

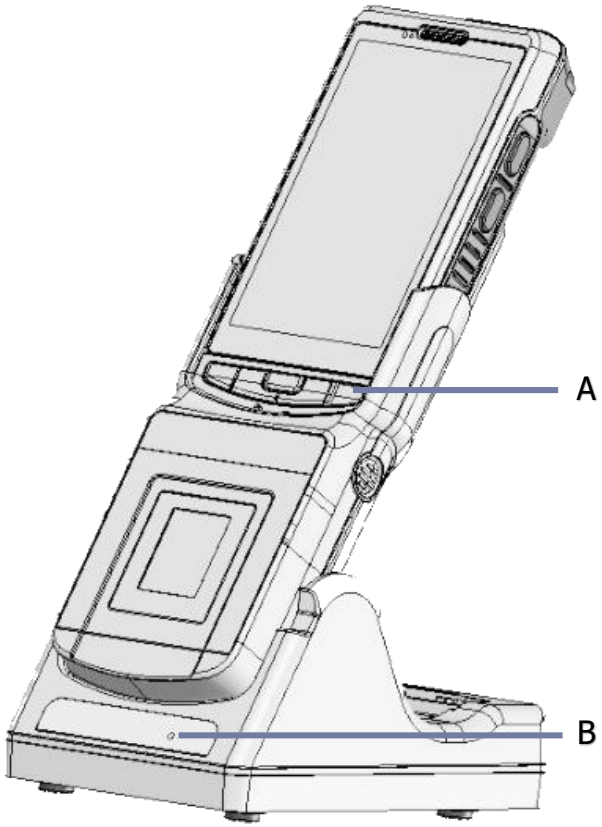

A. Device charging status LED

- OFF : Not charging
- Red LED : Charging
- Green LED : Fully charged

B. Spare battery charging status LED

- OFF : Not Charging
- Red LED : Charging
- Green LED : Fully Charged

** If the LED is off when the device or the sp are battery was mounted. Make sure that RP1 600X/EID10PLUS is inserted correctly in the c radle or RP1600X/EID10 Alpha is connected t o a power source.

Using the NFC

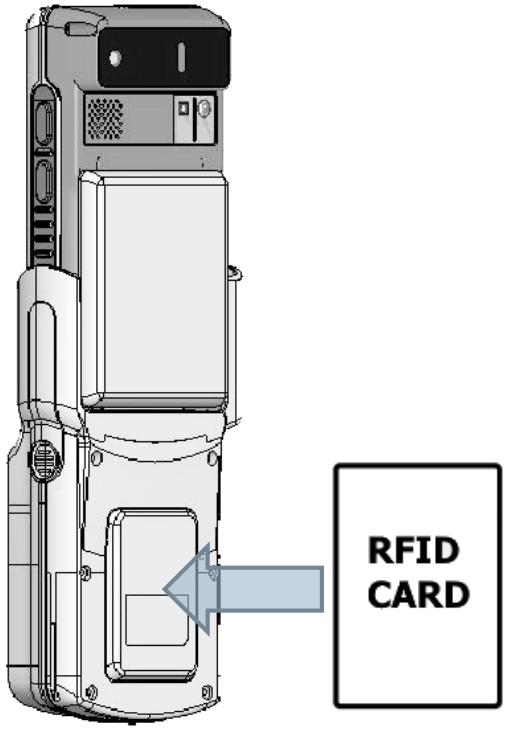

Since HID RFID antenna is integrated in the re ar side of the EID10 Alpha, read the contactles s card as shown.

NFC reading distance depends on the Card type.

Using the Fingerprint Reader

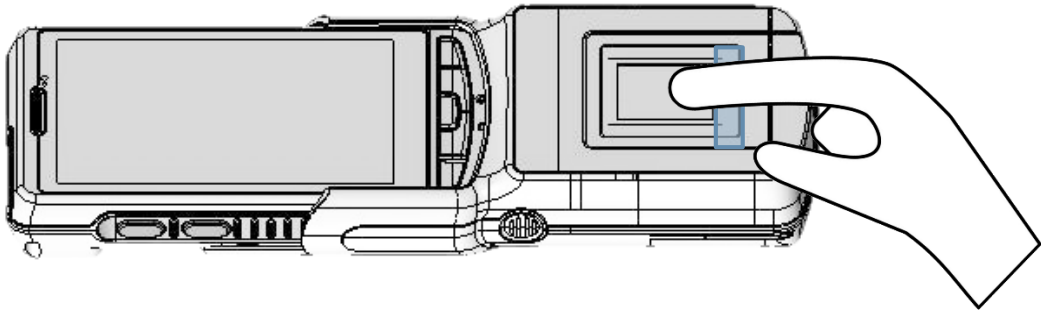

When reading a fingerprint, you need to touch finger on t he outside of the fingerprint reader sensor shown in the i mage (orange color) to read.

This device contains licence-exempt transmitter(s)/receiver(s) that comply with Innovation, Science and Economic Development Canada's licence-exempt RSS(s). Operation is subject to the following two conditions:

1. This device may not cause interference.
2. This device must accept any interference, including interference that may cause undesired operation of the device.

L'émetteur/récepteur exempt de licence contenu dans le présent appareil est conforme aux CNR d'Innovation, Sciences et Développement économique Canada applicables aux appareils radio exempts de licence. L'exploitation est autorisée aux deux conditions suivantes :

1. L'appareil ne doit pas produire de brouillage;
2. L'appareil doit accepter tout brouillage radioélectrique subi, même si le brouillage est susceptible d'en compromettre le fonctionnement.

The device meets the exemption from the routine evaluation limits in section 2.5 of RSS 102 and compliance with RSS-102 RF exposure, users can obtain Canadian information on RF exposure and compliance.

This transmitter must not be co-located or operating in conjunction with any other antenna or transmitter. This equipment should be installed and operated with a minimum distance of 20 centimeters between the radiator and your body.

Le dispositif rencontre l'exemption des limites courantes d'évaluation dans la section 2.5 de RSS 102 et la conformité à l'exposition de RSS-102 RF, utilisateurs peut obtenir l'information anadienne sur l'exposition et la conformité de RF.

Cet émetteur ne doit pas être Co-placé ou ne fonctionnant en même temps qu'aucune autre antenne ou émetteur. Cet équipement devrait être installé et actionné avec une distance minimum de 20 centimètres entre le radiateur et
votre corps.