SAR TEST REPORT

For

DynamiCode Company Limited

Smart POS Terminal

Test Model:P92

Additional Model No.: /

Prepared for	:	DynamiCode Company Limited
Address	:	501. Building#1,No 707.Wuxing Road, Free Trade Zone, Shanghai PR C

Prepared by	:	Shenzhen LCS Compliance Testing Laboratory Ltd.
Address	:	101, 201 Bldg A & 301 Bldg C, Juji Industrial Park Yabianxueziwei, Shajing Street, Baoan District, Shenzhen, 518000, China
Tel	:	(86)755-82591330
Fax	:	(86)755-82591332
Web	:	www.LCS-cert.com
Mail	:	webmaster@LCS-cert.com

Date of receipt of test sample	:	April 18, 2023
Number of tested samples	:	1
Sample No.	:	A011323009-1
Serial number	:	Prototype
Date of Test	:	April 18, 2023~April 28, 2023
Date of Report	:	May 06, 2023

SAR TEST REPORT

Report Reference No. ..... :	**LCSA011323009EB**
Date Of Issue ..... :	May 06, 2023
Testing Laboratory Name..... :	**Shenzhen LCS Compliance Testing Laboratory Ltd.**
Address ..... :	101, 201 Bldg A & 301 Bldg C, Juji Industrial Park Yabianxueziwei, Shajing Street, Baoan District, Shenzhen, 518000, China
Testing Location/ Procedure ..... :	Full application of Harmonised standards ■ Partial application of Harmonised standards □ Other standard testing method □
Applicant's Name ..... :	**DynamiCode Company Limited**
Address ..... :	501. Building#1,No 707.Wuxing Road, Free Trade Zone, Shanghai PR C
Test Specification:	
Standard..... :	IEEE Std C95.1, 2019/ IEEE Std 1528™-2013/FCC Part 2.1093
Test Report Form No. ..... :	LCSEMC-1.0
TRF Originator..... :	Shenzhen LCS Compliance Testing Laboratory Ltd.
Master TRF ..... :	Dated 2011-03

Shenzhen LCS Compliance Testing Laboratory Ltd. All rights reserved.
This publication may be reproduced in whole or in part for non-commercial purposes as long as the Shenzhen LCS Compliance Testing Laboratory Ltd. is acknowledged as copyright owner and source of the material. Shenzhen LCS Compliance Testing Laboratory Ltd. takes noresponsibility for and will not assume liability for damages resulting from the reader's interpretation of the reproduced material due to its placement and context.

Test Item Description..... :	**Smart POS Terminal**
Trade Mark..... :	DynamiCode
Model/Type Reference..... :	P92
Operation Frequency ..... :	GSM 850,1900;WCDMA II,V; LTE2,5,7,38,41;WLAN2.4G and Bluetooth4.2.
Ratings ..... :	Input: DC 5V, 2000mA DC 7.4V by Rechargeable Li-ion Battery, 2600mAh
Result ..... :	**Positive**

Compiled by:	**Supervised by:**	**Approved by:**
Jay Zhan	Cary Luo	Gavin Liang
Jay Zhan/ File administrators	Cary Luo / Technique principal	Gavin Liang/ Manager

SAR -- TEST REPORT

Test Report No. :	**LCSA011323009EB**	May 06, 2023 Date of issue

Type / Model.....	:	P92
EUT.....	:	Smart POS Terminal
Applicant.....	**:**	**DynamiCode Company Limited**
Address.....	:	501. Building#1,No 707.Wuxing Road, Free Trade Zone, Shanghai PR C
Telephone.....	:	/
Fax.....	:	/
Manufacturer.....	**:**	**DynamiCode Company Limited**
Address.....	:	501. Building#1,No 707.Wuxing Road, Free Trade Zone, Shanghai PR C
Telephone.....	:	/
Fax.....	:	/
Factory.....	**:**	**Suzhou Sipay DynamiCode Intelligent Technology Co., Ltd**
Address.....	:	2, 3, 4/F Workshop, No.236 SongShan Road, High-Tech Zone, SuZhou City, JiangSu Province, P.R.C
Telephone.....	:	/
Fax.....	:	/

Test Result	**Positive**

The test report merely corresponds to the test sample.
It is not permitted to copy extracts of these test result without the written permission of the test laboratory.

Revison History

Revision	Issue Date	Revision Content	Revised By
000	May 06, 2023	Initial Issue	--

TABLE OF CONTENTS

1. TEST STANDARDS AND TEST DESCRIPTION 6

1.1. TEST STANDARDS 6
1.2. TEST DESCRIPTION 6
1.3. GENERAL REMARKS 6
1.4. PRODUCT DESCRIPTION 6
1.5. STATEMENT OF COMPLIANCE 9

2. TEST ENVIRONMENT 10

2.1. TEST FACILITY 10
2.2. ENVIRONMENTAL CONDITIONS 10
2.3. SAR LIMITS 10
2.4. EQUIPMENTS USED DURING THE TEST 11

3. SAR MEASUREMENTS SYSTEM CONFIGURATION 12

3.1. SARMEASUREMENT SET-UP 12
3.2. OPENSAR E-FIELD PROBE SYSTEM 13
3.3. PHANTOMS 14
3.4. DEVICE HOLDER 14
3.5. SCANNING PROCEDURE 15
3.6. DATA STORAGE AND EVALUATION 17
3.7. TISSUE DIELECTRIC PARAMETERS FOR HEAD AND BODY PHANTOMS 19
3.8. TISSUE EQUIVALENT LIQUID PROPERTIES 19
3.9. SYSTEM CHECK 20
3.10. SAR MEASUREMENT PROCEDURE 22
3.11. POWER REDUCTION 27
3.12. POWER DRIFT 27

4. TEST CONDITIONS AND RESULTS 28

4.1. CONDUCTED POWER RESULTS 28
4.2. TRANSMIT ANTENNAS AND SAR MEASUREMENT POSITION 44
4.3. SAR MEASUREMENT RESULTS 45
4.4. SIMULTANEOUS TX SAR CONSIDERATIONS 49
4.5. SAR MEASUREMENT VARIABILITY 52
4.6. GENERAL DESCRIPTION OF TEST PROCEDURES 53
4.7. MEASUREMENT UNCERTAINTY (450MHZ-6GHZ) 53
4.8. SYSTEM CHECK RESULTS 54
4.9. SAR TEST GRAPH RESULTS 58

5. 5.CALIBRATION CERTIFICATES 68

5.1 PROBE-EPGO376 CALIBRATION CERTIFICATE 68
5.2 SID835DIPOLE CALIBRATION CERITICATE 79
5.3 SID1900 DIPOLE CALIBRATION CERTIFICATE 90
5.4 SID2450 DIPOLE CALIBRATION CERITICATE 101
5.5 SID2600 DIPOLE CALIBRATION CERITICATE 112

6. PHOTOGRAPHS OF THE LIQUID 123

7. PHOTOGRAPHS OF THE TEST 125

8. EUT PHOTOGRAPHS 126

1. TEST STANDARDS AND TEST DESCRIPTION

1.1. Test Standards

IEEE Std C95.1-2019: IEEE Standard for Safety Levels with Respect to Human Exposure to Electric, Magnetic, and Electromagnetic Fields, 0 Hz to 300 GHz.It specifies the maximum exposure limit of 1.6 W/kg as averaged over any 1 gram of tissue for portable devices being used within 20 cm of the user in the uncontrolled environment.
IEEE Std 1528™-2013: IEEE Recommended Practice for Determining the Peak Spatial-Average Specific Absorption Rate (SAR) in the Human Head from Wireless Communications Devices: Measurement Techniques.
FCC Part 2.1093 Radiofrequency Radiation Exposure Evaluation:Portable Devices
KDB447498 D01 General RF Exposure Guidance v06 : Mobile and Portable Device RF Exposure Procedures and Equipment Authorization Policies
KDB447498 D02 SAR Procedures for Dongle Xmtr v02r01: SAR Measurement Procedures For USB Dongle Transmitters.
KDB865664 D01 SAR Measurement 100 MHz to 6 GHz v01r04 : SAR Measurement Requirements for 100 MHz to 6 GHz
KDB865664 D02 RF Exposure Reporting v01r02: RF Exposure Compliance Reporting and Documentation Considerations
KDB 248227 D01 802.11 Wi-Fi SAR v02r02: SAR GUIDANCE FOR IEEE 802.11 (Wi-Fi) TRANSMITTERS
KDB941225 D01 3G SAR Procedures: 3G SAR MEAUREMENT PROCEDURES
KDB 941225 D05 SAR for LTE Devices: SAR Evaluation Considerations For LTE Devices

1.2. Test Description

The EUT battery must be fully charged and checked periodically during the test to ascertain uniform power . And Test device is identical prototype.

1.3. General Remarks

Date of receipt of test sample	:	April 18, 2023
Testing commenced on	:	April 18, 2023
Testing concluded on	:	April 28, 2023

1.4. Product Description

The DynamiCode Company Limited's Model: Smart POS Terminal or the "EUT" as referred to in this report; more general information as follows, for more details, refer to the user's manual of the EUT.

General Description	
EUT :	Smart POS Terminal
Model/Type reference:	P92
Additional Model No.	/
Model Declaration:	/
Hardware Version	V03.03
Software Version	V1.1.5
Power supply:	Input: DC 5V, 2000mA DC 7.4V by Rechargeable Li-ion Battery, 2600mAh
The EUT is Smart POS Terminal . the Smart POS Terminal is intended for WLAN transmission. It is equipped with WiFi2.4G;GSM 850,1900; WCDMA Band II, Band V; LTE 2,5,7,38 41. For more information see the following datasheet	

Technical Characteristics	
LTE	
Operation Band:	☒E-UTRA Band 2(U.S.-Band) ☒E-UTRA Band 5(U.S.-Band) ☒E-UTRA Band 7(U.S.-Band) ☒E-UTRA Band 38(U.S.-Band) ☒E-UTRA Band 41(U.S.-Band)
Modulation Type:	QPSK/16QAM
Release Version:	R10
Power Class:	Class 3
Antenna Description:	FPC Antenna 0.69dBi (max.) For E-UTRA Band 2 0.69dBi (max.) For E-UTRA Band 5 0.69dBi (max.) For E-UTRA Band 7 0.69dBi (max.) For E-UTRA Band 38 0.69dBi (max.) For E-UTRA Band 41
WIFI 2.4G	
Frequency Range:	2412MHz-2462MHz
Type of Modulation:	IEEE 802.11b: DSSS (CCK, DQPSK, DBPSK) IEEE 802.11g: OFDM (64QAM, 16QAM, QPSK, BPSK) IEEE 802.11n: OFDM (64QAM, 16QAM, QPSK, BPSK)
Channel number:	11 channels for 20MHz bandwidth (2412~2462MHz) 7 channels for 40MHz bandwidth (2422~2452MHz)
Channel separation:	5MHz
Antenna Description:	FPC Antenna, -0.56dBi(Max.)
Bluetooth	
Frequency Range	2402MHz~2480MHz
Channel Number	79 channels for Bluetooth V4.2 (DSS) 40 channels for Bluetooth V4.2 (DTS)
Channel Spacing	1MHz for Bluetooth V4.2 (DSS) 2MHz for Bluetooth V4.2 (DTS)
Modulation Type	GFSK, π/4-DQPSK, 8-DPSK for Bluetooth V4.2(DSS) GFSK for Bluetooth V4.2 (DTS)
Bluetooth Version	V4.2
Antenna Description	FPC Antenna, -0.56dBi(Max.)
UMTS	
Operation Band:	☒WCDMA Band II (U.S.-Band) ☒WCDMA Band V (U.S.-Band) ☐WCDMA Band IV (U.S.-Band) ☒WCDMA Band I (EU-Band) ☒WCDMA Band VIII (EU-Band)
FrequencyRange:	WCDMA Band II: 1852.4~1907.6MHz WCDMA Band V: 826.4~846.6MHz
Modulation Type:	QPSK,16QAM
Release Version	R9
Antenna Description:	FPC Antenna 0.8dBi (max.) For WCDMA Band II 0.8dBi (max.) For WCDMA Band V
GSM	
Support Band:	☒GSM 900 (EU-Band) ☒DCS 1800 (EU-Band) ☒GSM 850 (U.S.-Band) ☒PCS 1900 (U.S.-Band)
Release Version:	R99
GPRS Class	Class 12
EGPRS Class	Class 12
Modulation Type:	GMSK for GSM/GPRS; GMSK/8PSK for EGPRS

Antenna Description:	FPC Antenna -5.13dBi (max.) For GSM 850 -5.13dBi (max.) For PCS 1900
GPS function	Support and only RX
NFC	
Operating Frequency	13.56MHz
Modulation Type	ASK
Antenna Description	Internal Antenna, 2.0 dBi(Max.)

1.5. Statement of Compliance

The maximum of results of SAR found during testing for Smart POS Terminal are follows:

<Highest Reported standalone SAR Summary>

Classment Class	Frequency Band	Hotspot (Report SAR_{1-g} (W/kg)	Body-worn (Report SAR_{1-g} (W/kg)
		(Separation Distance 0mm)	
PCB	GSM 850	0.403	0.403
	GSM1900	0.238	0.238
	WCDMA Band V	0.181	0.181
	WCDMA Band II	0.788	0.788
	LTE band 2	0.473	0.473
	LTE band 5	0.144	0.144
	LTE band 7	0.325	0.325
	LTE band 38	0.238	0.238
	LTE band 41	0.192	0.192
DTS	WIFI2.4G	0.153	0.153

This device is in compliance with Specific Absorption Rate (SAR) for general population/uncontrolled exposure limits (1.6 W/kg) specified in FCC 47 CFR part 2 (2.1093) and ANSI/IEEE C95.1-2019, and had been tested in accordance with the measurement methods and procedures specified in IEEE 1528-2013.

<Highest Reported simultaneous SAR Summary>

Exposure Position	Classment Class	Highest Reported Simultaneous Transmission SAR_{1-g} (W/kg)
Body-worn (hotspot open)	PCB	**0.941**
	DTS	

2. TEST ENVIRONMENT

2.1. Test Facility

The test facility is recognized, certified, or accredited by the following organizations:

Site Description

Sar Lab. : NVLAP Accreditation Code is 600167-0.
FCC Designation Number is CN5024.
CAB identifier is CN0071.
CNAS Registration Number is L4595.
Test Firm Registration Number: 254912.

2.2. Environmental conditions

During the measurement the environmental conditions were within the listed ranges:

Temperature:	18-25 ° C
Humidity:	40-65 %
Atmospheric pressure:	950-1050mbar

2.3. SAR Limits

FCC Limit (1g Tissue)

EXPOSURE LIMITS	SAR (W/kg)	
	(General Population / Uncontrolled Exposure Environment)	(Occupational / Controlled Exposure Environment)
Spatial Average(averaged over the whole body)	0.08	0.4
Spatial Peak(averaged over any 1 g of tissue)	1.6	8.0
Spatial Peak(hands/wrists/ feet/anklesaveraged over 10 g)	4.0	20.0

Population/Uncontrolled Environments are defined as locations where there is the exposure of individual who have no knowledge or control of their exposure.
Occupational/Controlled Environments are defined as locations where there is exposure that may be incurred by people who are aware of the potential for exposure (i.e. as a result of employment or occupation).

2.4. Equipments Used during the Test

Item	Equipment	Manufacturer	Model No.	Serial No.	Cal Date	Due Date
1	PC	Lenovo	G5005	MY42081102	N/A	N/A
2	SAR Measurement system	SATIMO	4014_01	SAR_4014_01	N/A	N/A
3	Signal Generator	Agilent	E4438C	MY49072627	2022-06-16	2023-06-15
4	S-parameter Network Analyzer	Agilent	8753ES	US38432944	2022-06-16	2023-06-15
5	Wideband Radio Communication Tester	R&S	CMW500	103818-1	2022-06-16	2023-06-15
6	E-Field PROBE	MVG	SSE2	SN 25/22 EPGO376	2022-06-29	2023-06-28
7	DIPOLE 835	SATIMO	SID 835	SN 07/14 DIP 0G835-303	2021-09-29	2024-09-28
8	DIPOLE 1900	SATIMO	SID 1900	SN 38/18 DIP 1G900-466	2021-09-22	2024-09-21
9	DIPOLE 2450	SATIMO	SID 2450	SN 07/14 DIP 2G450-306	2021-09-29	2024-09-28
10	DIPOLE 2600	SATIMO	SID 2600	SN 38/18 DIP 2G600-468	2021-09-22	2024-09-21
11	COMOSAR OPENCoaxial Probe	SATIMO	OCPG 68	SN 40/14 OCPG68	2022-10-29	2023-10-28
12	SAR Locator	SATIMO	VPS51	SN 40/14 VPS51	2022-10-29	2023-10-28
13	Communication Antenna	SATIMO	ANTA57	SN 39/14 ANTA57	2022-10-29	2023-10-28
14	FEATURE PHONEPOSITIONING DEVICE	SATIMO	MSH98	SN 40/14 MSH98	N/A	N/A
15	DUMMY PROBE	SATIMO	DP60	SN 03/14 DP60	N/A	N/A
16	SAM PHANTOM	SATIMO	SAM117	SN 40/14 SAM117	N/A	N/A
17	Liquid measurement Kit	HP	85033D	3423A03482	N/A	N/A
18	Power meter	Agilent	E4419B	MY45104493	2022-10-29	2023-10-28
19	Power meter	Agilent	E4419B	MY45100308	2022-10-29	2023-10-28
20	Power sensor	Agilent	E9301H	MY41495616	2022-10-29	2023-10-28
21	Power sensor	Agilent	E9301H	MY41495234	2022-10-29	2023-10-28
22	Directional Coupler	MCLI/USA	4426-20	03746	2022-06-16	2023-06-15

Note:

1) Per KDB865664D01 requirements for dipole calibration, the test laboratory has adopted three year extended calibration interval. Each measured dipole is expected to evalute with following criteria at least on annual interval.

a) There is no physical damage on the dipole;

b) System check with specific dipole is within 10% of calibrated values;

c) The most recent return-loss results,measued at least annually,deviates by no more than 20% from the previous measurement;

d) The most recent measurement of the real or imaginary parts of the impedance, measured at least annually is within 5Ω from the provious measurement.

2) Network analyzer probe calibration against air, distilled water and a shorting block performed before measuring liquid parameters.

3. SAR MEASUREMENTS SYSTEM CONFIGURATION

3.1. SARMeasurement Set-up

The OPENSAR system for performing compliance tests consist of the following items:

A standard high precision 6-axis robot (KUKA) with controller and software.

KUKA Control Panel (KCP)

A dosimetric probe, i.e., an isotropic E-field probe optimized and calibrated for usage in tissue simulating liquid. The probe is equipped with a Video Positioning System(VPS).

The stress sensor is composed with mechanical and electronic when the electronic part detects a change on the electro-mechanical switch,It sends an “Emergency signal” to the robot controller that to stop robot’s moves

A computer operating Windows XP.

OPENSAR software

Remote control with teaches pendant and additional circuitry for robot safety such as warning lamps, etc.

The SAM phantom enabling testing left-hand right-hand and body usage.

The Position device for handheld EUT

Tissue simulating liquid mixed according to the given recipes .

System validation dipoles to validate the proper functioning of the system.

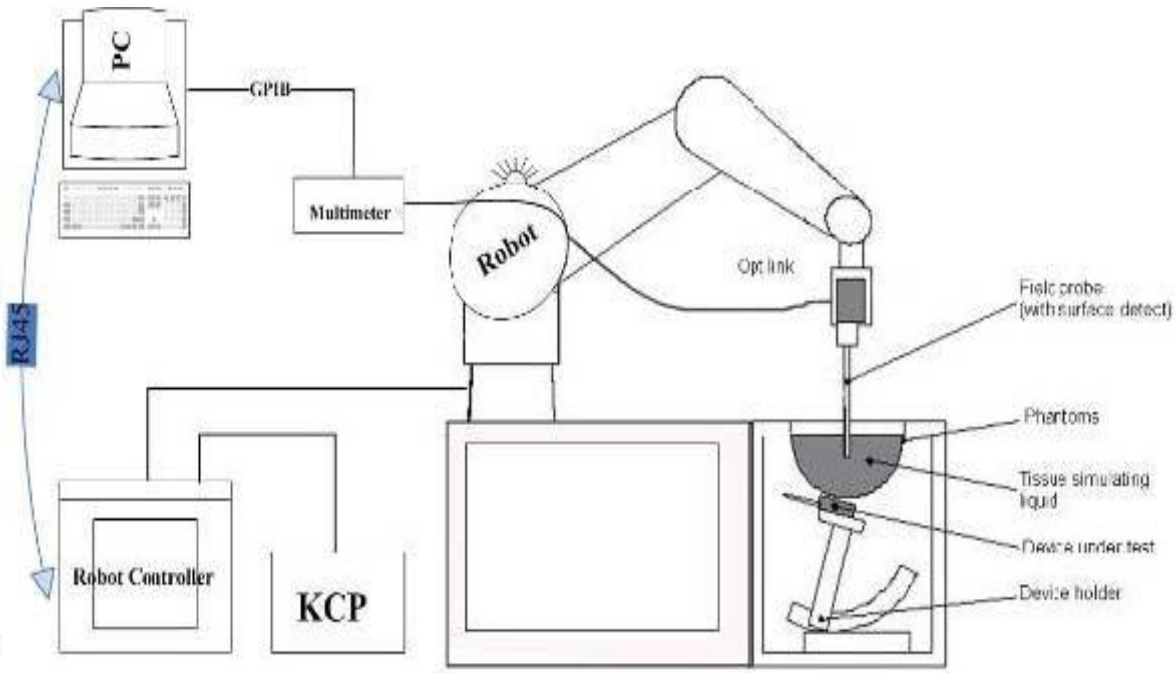

3.2. OPENSAR E-field Probe System

The SAR measurements were conducted with the dosimetric probe EPGO376 (manufactured by MVG), designed in the classical triangular configuration and optimized for dosimetric evaluation.

Probe Specification

Construction Symmetrical design with triangular core
Interleaved sensors
Built-in shielding against static charges
PEEK enclosure material (resistant to organic solvents, e.g., DGBE)

Calibration ISO/IEC 17025 calibration service available.

Frequency	450 MHz to 6 GHz; Linearity:0.25dB(450 MHz to 6 GHz)
Directivity	0.25 dB in HSL (rotation around probe axis) 0.5 dB in tissue material (rotation normal to probe axis)
Dynamic Range	0.01W/kg to > 100 W/kg; Linearity: 0.25 dB
Dimensions	Overall length: 330 mm (Tip: 16mm) Tip diameter: 5 mm (Body: 8 mm) Distance from probe tip to sensor centers: 2.5 mm
Application	General dosimetry up to 6 GHz Dosimetry in strong gradient fields Compliance tests of Mobile Phones

Isotropic E-Field Probe

The isotropic E-Field probe has been fully calibrated and assessed for isotropicity, and boundary effect within a controlled environment. Depending on the frequency for which the probe is calibrated the method utilized for calibration will change.

The E-Field probe utilizes a triangular sensor arrangement as detailed in the diagram below:

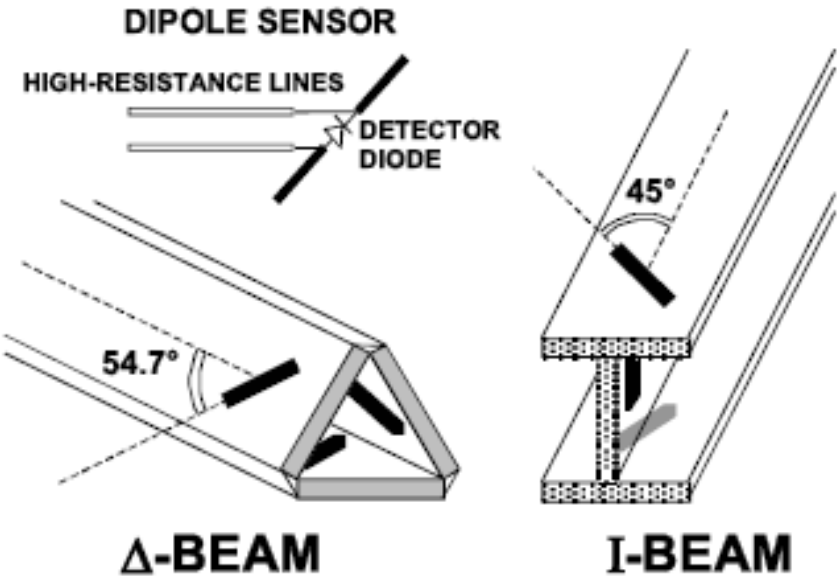

3.3. Phantoms

The SAM Phantom SAM117 is constructed of a fiberglass shell ntegrated in a wooden table. The shape of the shell is in compliance with the specification set in IEEE 1528 and EN62209-1 , EN62209-2.The phantom enables the dosimetric evaluation of left and right hand phone usage as well as body mounted usage at the flat phantom region. A cover prevents the evaporation of the liquid. Reference markings on the Phantom allow the complete setup of allpredefined phantom positions and measurement grids by manually teaching three points in the robo

System checking was performed using the flat section, whilst Head SAR tests used the left and right head profile sections. Body SAR testing also used the flat section between the head profiles.

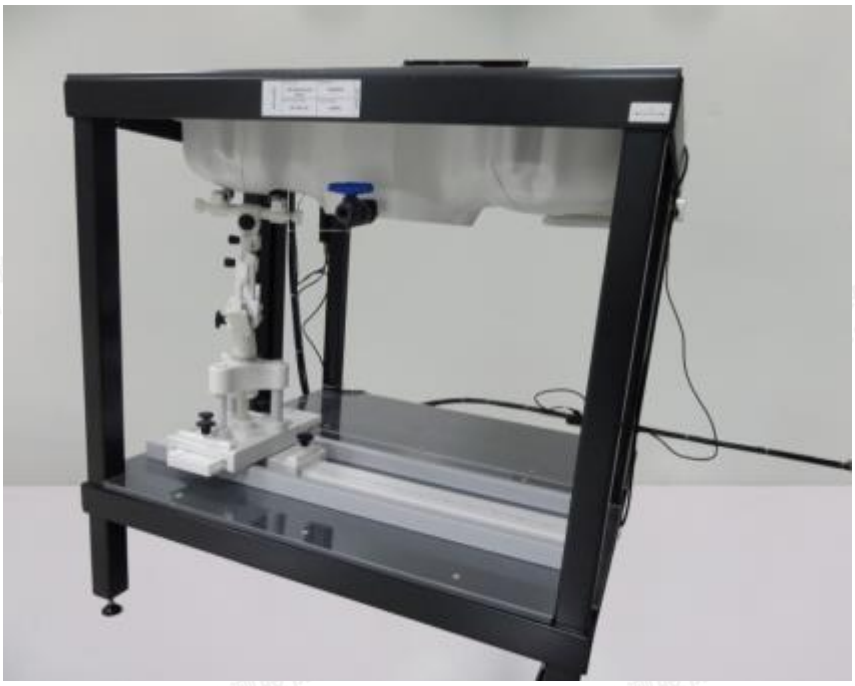

SAM Twin Phantom

3.4. Device Holder

In combination with the Generic Twin PhantomSAM117, the Mounting Device enables the rotation of the

mounted transmitter in spherical coordinates whereby the rotation points is the ear opening. The devices can be easily, accurately, and repeatedly positioned according to the FCC specifications. The device holder can be locked at different phantom locations (left head, right head, flat phantom).

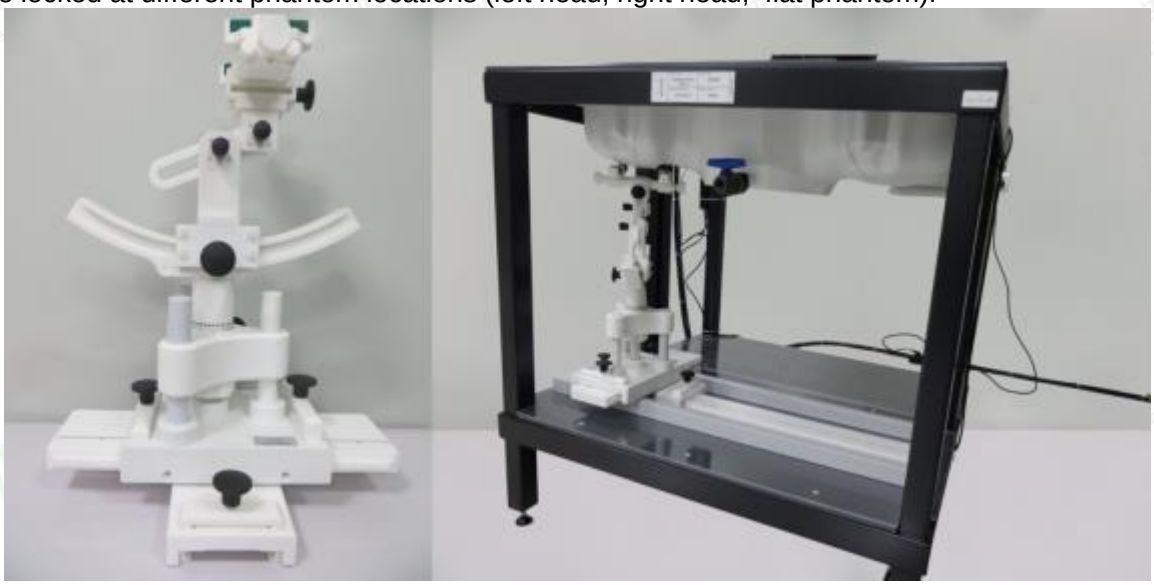

Device holder supplied by SATIMO

3.5. Scanning Procedure

The procedure for assessing the peak spatial-average SAR value consists of the following steps

Power Reference Measurement
The reference and drift jobs are useful jobs for monitoring the power drift of the device under test in the batch process. Both jobs measure the field at a specified reference position, at a selectable distance from the phantom surface. The reference position can be either the selected section's grid reference point or a user point in this section. The reference job projects the selected point onto the phantom surface, orients the probe perpendicularly to the surface, and approaches the surface using the selected detection method.

Area Scan
The Area Scan is used as a fast scan in two dimensions to find the area of high field values before running a detailed measurement around the hot spot.Before starting the area scan a grid spacing of 15 mm x 15 mm is set. During the scan the distance of the probe to the phantom remains unchanged. After finishing area scan, the field maxima within a range of 2 dB will be ascertained.

	≤ 3 GHz	> 3 GHz
Maximum distance from closest measurement point (geometric center of probe sensors) to phantom surface	5 mm ± 1 mm	½·δ·ln(2) mm ± 0.5 mm
Maximum probe angle from probe axis to phantom surface normal at the measurement location	30° ± 1°	20° ± 1°
Maximum area scan spatial resolution: Δx_{Area}, Δy_{Area}	≤ 2 GHz: ≤ 15 mm 2 – 3 GHz: ≤ 12 mm	3 – 4 GHz: ≤ 12 mm 4 – 6 GHz: ≤ 10 mm
	When the x or y dimension of the test device, in the measurement plane orientation, is smaller than the above, the measurement resolution must be ≤ the corresponding x or y dimension of the test device with at least one measurement point on the test device.	

Zoom Scan
Zoom Scans are used to estimate the peak spatial SAR values within a cubic averaging volume containing 1 g and 10 g of simulated tissue. The default Zoom Scan is done by 7x7x7 points within a cube whose base is centered around the maxima found in the preceding area scan.

Maximum zoom scan spatial resolution: Δx_{Zoom}, Δy_{Zoom}			≤ 2 GHz: ≤ 8 mm 2 – 3 GHz: ≤ 5 mm*	3 – 4 GHz: ≤ 5 mm* 4 – 6 GHz: ≤ 4 mm*
Maximum zoom scan spatial resolution, normal to phantom surface	uniform grid: $\Delta z_{Zoom}(n)$		≤ 5 mm	3 – 4 GHz: ≤ 4 mm 4 – 5 GHz: ≤ 3 mm 5 – 6 GHz: ≤ 2 mm
	graded grid	$\Delta z_{Zoom}(1)$: between 1st two points closest to phantom surface	≤ 4 mm	3 – 4 GHz: ≤ 3 mm 4 – 5 GHz: ≤ 2.5 mm 5 – 6 GHz: ≤ 2 mm
		$\Delta z_{Zoom}(n>1)$: between subsequent points	$\leq 1.5 \cdot \Delta z_{Zoom}(n-1)$ mm	
Minimum zoom scan volume	x, y, z		≥ 30 mm	3 – 4 GHz: ≥ 28 mm 4 – 5 GHz: ≥ 25 mm 5 – 6 GHz: ≥ 22 mm

Note: δ is the penetration depth of a plane-wave at normal incidence to the tissue medium; see IEEE Std 1528-2013 for details.

* When zoom scan is required and the *reported* SAR from the *area scan based 1-g SAR estimation* procedures of KDB Publication 447498 is ≤ 1.4 W/kg, ≤ 8 mm, ≤ 7 mm and ≤ 5 mm zoom scan resolution may be applied, respectively, for 2 GHz to 3 GHz, 3 GHz to 4 GHz and 4 GHz to 6 GHz.

Power Drift measurement
The drift job measures the field at the same location as the most recent reference job within the same procedure, and with the same settings. The drift measurement gives the field difference in dB from the reading conducted within the last reference measurement. Several drift measurements are possible for one reference measurement. This allows a user to monitor the power drift of the device under test within a batch process. In the properties of the Drift job, the user can specify a limit for the drift and have OPENSAR software stop the measurements if this limit is exceeded.

3.6. Data Storage and Evaluation

Data Storage
The OPENSAR software stores the acquired data from the data acquisition electronics as raw data (in microvolt readings from the probe sensors), together with all necessary software parameters for the data evaluation (probe calibration data, liquid parameters and device frequency and modulation data) in measurement files . The software evaluates the desired unit and format for output each time the data is visualized or exported. This allows verification of the complete software setup even after the measurement and allows correction of incorrect parameter settings. For example, if a measurement has been performed with a wrong crest factor parameter in the device setup, the parameter can be corrected afterwards and the data can be re-evaluated.

The measured data can be visualized or exported in different units or formats, depending on the selected probe type ([V/m], [A/m], [°C], [mW/g], [mW/cm²], [dBrel], etc.). Some of these units are not available in certain situations or show meaningless results, e.g., a SAR output in a lossless media will always be zero. Raw data can also be exported to perform the evaluation with other software packages.

Data Evaluation
The OPENSAR software automatically executes the following procedures to calculate the field units from the microvolt readings at the probe connector. The parameters used in the evaluation are stored in the configuration modules of the software:

Probe parameters:	- Sensitivity	Normi, ai0, ai1, ai2
	- Conversion factor	ConvFi
	- Diode compression point	Dcpi
Device parameters:	- Frequency	f
	- Crest factor	cf
Media parameters:	- Conductivity	σ
	- Density	ρ

These parameters must be set correctly in the software. They can be found in the component documents or they can be imported into the software from the configuration files issued for the OPENSAR components. In the direct measuring mode of the multimeter option, the parameters of the actual system setup are used. In the scan visualization and export modes, the parameters stored in the corresponding document files are used.

The first step of the evaluation is a linearization of the filtered input signal to account for the compression characteristics of the detector diode. The compensation depends on the input signal, the diode type and the DC-transmission factor from the diode to the evaluation electronics.If the exciting field is pulsed, the crest factor of the signal must be known to correctly compensate for peak power. The formula for each channel can be given as:

$$V_i = U_i + U_i^2 \cdot \frac{cf}{dcp_i}$$

With Vi = compensated signal of channel i (i = x, y, z)
Ui = input signal of channel i (i = x, y, z)
cf = crest factor of exciting field
dcpi = diode compression point

From the compensated input signals the primary field data for each channel can be evaluated:

$$\text{E} - \text{fieldprobes}: \quad E_i = \sqrt{\frac{V_i}{Norm_i \cdot ConvF}}$$

$$\text{H} - \text{fieldprobes}: \quad H_i = \sqrt{V_i} \cdot \frac{a_{i0} + a_{i1}f + a_{i2}f^2}{f}$$

With Vi = compensated signal of channel i (i = x, y, z)
Normi = sensor sensitivity of channel i (i = x, y, z)
[mV/(V/m)2] for E-field Probes
ConvF = sensitivity enhancement in solution
aij = sensor sensitivity factors for H-field probes
f = carrier frequency [GHz]
Ei = electric field strength of channel i in V/m
Hi = magnetic field strength of channel i in A/m

The RSS value of the field components gives the total field strength (Hermitian magnitude):

$$E_{tot} = \sqrt{E_x^2 + E_y^2 + E_z^2}$$

The primary field data are used to calculate the derived field units.

$$SAR = E_{tot}^2 \cdot \frac{\sigma}{\rho \cdot 1'000}$$

with SAR = local specific absorption rate in mW/g
Etot = total field strength in V/m
σ = conductivity in [mho/m] or [Siemens/m]
ρ = equivalent tissue density in g/cm3

Note that the density is normally set to 1 (or 1.06), to account for actual brain density rather than the density of the simulation liquid.

3.7. Tissue Dielectric Parameters for Head and Body Phantoms

The liquid is consisted of water,salt,Glycol,Sugar,Preventol and Cellulose.The liquid has previously been proven to be suited for worst-case.It's satisfying the latest tissue dielectric parameters requirements proposed by the KDB865664.

The composition of the tissue simulating liquid

Frequency (MHz)	Bactericide	DGBE	HEC	NaCl	Sucrose	1,2-Propanediol	X100	Water	Conductivity	Permittivity
	%	%	%	%	%	%	%	%	σ	εr
750	/	/	/	0.79	/	64.81	/	34.40	0.97	41.8
835	/	/	/	0.79	/	64.81	/	34.40	0.97	41.8
900	/	/	/	0.79	/	64.81	/	34.40	0.97	41.8
1800	/	13.84	/	0.35	/	/	30.45	55.36	1.38	41.0
1900	/	13.84	/	0.35	/	/	30.45	55.36	1.38	41.0
2000	/	7.99	/	0.16	/	/	19.97	71.88	1.55	41.1
2450	/	7.99	/	0.16	/	/	19.97	71.88	1.88	40.3
2600	/	7.99	/	0.16	/	/	19.97	71.88	1.88	40.3

Target Frequency (MHz)	Head		Body	
	ε_r	σ(S/m)	ε_r	σ(S/m)
450	43.5	0.87	56.7	0.94
835	41.5	0.90	55.2	0.97
900	41.5	0.97	55.0	1.05
915	41.5	0.98	55.0	1.06
1450	40.5	1.20	54.0	1.30
1610	40.3	1.29	53.8	1.40
1800-2000	40.0	1.40	53.3	1.52
2450	39.2	1.80	52.7	1.95
2600	39.0	1.96	52.5	2.16
3000	38.5	2.40	52.0	2.73
5800	35.3	5.27	48.2	6.00

3.8. Tissue equivalent liquid properties

Dielectric Performance of Head Tissue Simulating Liquid

Test Engineer: bob.yang									
Tissue Type	Measured Frequency (MHz)	Target Tissue		Measured Tissue				Liquid Temp.	Test Data
		σ	ε_r	σ	Dev.	ε_r	Dev.		
835H	835	0.90	41.50	0.87	-3.33%	42.98	3.57%	20.5	04/18/2023
1900H	1900	1.40	40.00	1.42	-0.56%	38.42	1.17%	21.3	04/22/2023
2450H	2450	1.80	39.20	1.79	1.02%	39.66	-2.23%	22.0	04/25/2023
2600H	2600	1.96	39.00	1.98	-3.33%	38.13	3.57%	22.3	04/28/2023

3.9. System Check

The purpose of the system check is to verify that the system operates within its specifications at the decice test frequency.The system check is simple check of repeatability to make sure that the system works correctly at the time of the compliance test;

System check results have to be equal or near the values determined during dipole calibration with the relevant liquids and test system (±10 %).

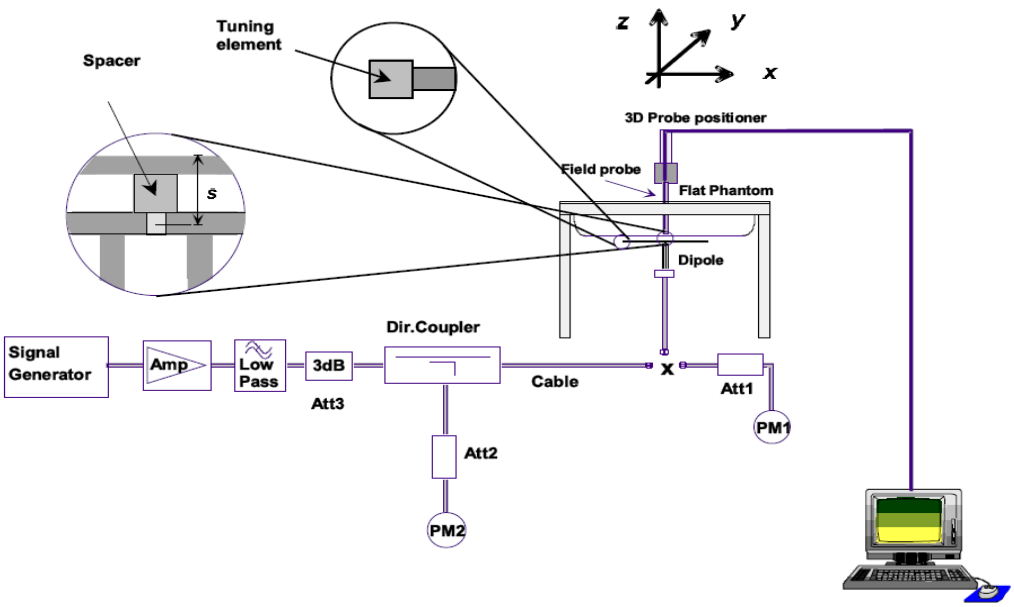

The output power on dipole port must be calibrated to 20 dBm (100mW) before dipole is connected.

Photo of Dipole Setup

Justification for Extended SAR Dipole Calibrations

Referring to KDB 865664D01V01r04, if dipoles are verified in return loss (<-20dB, within 20% of prior calibration), and in impedance (within 5 ohm of prior calibration), the annual calibration is not necessary and the calibration interval can be extended.While calibration intervals not exceed 3 years.

SID835 SN 07/14 DIP 0G835-303 Extend Dipole Calibrations

Date of Measurement	Return-Loss (dB)	Delta (%)	Real Impedance (ohm)	Delta (ohm)	Imaginary Impedance (ohm)	Delta (ohm)
2021-09-29	-24.49		54.9		2.8	
2022-09-29	-24.17	-1.31	54.5	-0.4	2.6	-0.2

SID1900 SN 38/18 DIP 1G900-466 Extend Dipole Calibrations

Date of Measurement	Return-Loss (dB)	Delta (%)	Real Impedance (ohm)	Delta (ohm)	Imaginary Impedance (ohm)	Delta (ohm)
2021-09-22	-26.43		50.5		4.7	
2022-09-22	-26.33	-0.38	50.2	-0.3	4.5	-0.2

SID2450 SN 07/14 DIP 2G450-306 Extend Dipole Calibrations

Date of Measurement	Return-Loss (dB)	Delta (%)	Real Impedance (ohm)	Delta (ohm)	Imaginary Impedance (ohm)	Delta (ohm)
2021-09-29	-25.59		44.7		-1.1	
2022-09-29	-25.68	0.35	44.8	0.1	-1.0	0.1

SID2600 SN 38/18 DIP 2G600-468 Extend Dipole Calibrations

Date of Measurement	Return-Loss (dB)	Delta (%)	Real Impedance (ohm)	Delta (ohm)	Imaginary Impedance (ohm)	Delta (ohm)
2021-09-29	-29.14		49.2		3.4	
2022-09-29	-29.12	-0.07	49.1	-0.1	3.2	-0.2

Mixture Type	Frequency (MHz)	Power	SAR_{1g} (W/kg)	SAR_{10g} (W/kg)	Drift (%)	1W Target		Difference percentage		Liquid Temp	Date
						SAR_{1g} (W/kg)	SAR_{10g} (W/kg)	1g	10g		
Head	835	100 mW	0.944	0.643	2.32	9.60	6.20	-1.67%	3.71%	20.5	04/18/2023
		Normalize to 1 Watt	9.44	6.43							
Head	1900	100 mW	3.920	2.085	-1.28	40.03	20.55	-2.07%	1.46%	21.3	04/22/2023
		Normalize to 1 Watt	39.20	20.85							
Head	2450	100 mW	5.466	2.552	-0.32	53.89	24.15	1.43%	5.67%	22.0	04/25/2023
		Normalize to 1 Watt	54.66	25.52							
Head	2600	100 mW	5.732	2.298	3.45	56.91	24.69	0.72%	-6.93%	22.3	04/28/2023
		Normalize to 1 Watt	57.32	22.98							

3.10. SAR measurement procedure

The measurement procedures are as follows:

3.10.1 Conducted power measurement

a. For WWAN power measurement, use base station simulator connection with RF cable, at maximum power in each supported wireless interface and frequency band.
b. Read the WWAN RF power level from the base station simulator.
c. For WLAN/BT power measurement, use engineering software to configure EUT WLAN/BT continuously Transmission, at maximum RF power in each supported wireless interface and frequency band.
d. Connect EUT RF port through RF cable to the power meter, and measure WLAN/BT output power.

3.10.2 GSM Test Configuration

SAR tests for GSM 850 and GSM 1900, a communication link is set up with a System Simulator (SS) by air link. Using CMU200 the power level is set to “5” for GSM 850, set to “0” for GSM 1900. Since the GPRS class is 12 for this EUT, it has at most 4 timeslots in uplink and at most 4 timeslots in downlink, the maximum total timeslots is 5. the EGPRS class is 12 for this EUT, it has at most 4 timeslots in uplink and at most 4 timeslots in downlink, the maximum total timeslots is 5.

SAR test reduction for GPRS and EDGE modes is determined by the source-based time-averaged output power specified for production units, including tune-up tolerance. The data mode with highest specified time-averaged output power should be tested for SAR compliance in the applicable exposure conditions. For modes with the same specified maximum output power and tolerance, the higher number time-slot configuration should be tested. GSM voice and GPRS data use GMSK, which is a constant amplitude modulation with minimal peak to average power difference within the time-slot burst. For EDGE, GMSK is used for MCS 1 – MCS 4 and 8-PSK is used for MCS 5 – MCS 9; where 8-PSK has an inherently higher peak-to-average power ratio. The GMSK and 8-PSK EDGE configurations are considered separately for SAR compliance. The GMSK EDGE configurations are grouped with GPRS and considered with respect to time-averaged maximum output power to determine compliance. The 3G SAR test reduction procedure is applied to 8-PSK EDGE with GMSK GPRS/EDGE as the primary mode.

3.10.3 UMTS Test Configuration

3G SAR Test Reduction Procedure

In the following procedures, the mode tested for SAR is referred to as the primary mode. The equivalent modes considered for SAR test reduction are denoted as secondary modes. Both primary and secondary modes must be in the same frequency band. When the maximum output power and tune-up tolerance specified for production units in a secondary mode is ≤ ¼ dB higher than the primary mode or when the highest reported SAR of the primary mode is scaled by the ratio of specified maximum output power and tune-up tolerance of secondary to primary mode and the adjusted SAR is ≤ 1.2 W/kg, SAR measurement is not required for the secondary mode.3 This is referred to as the 3G SAR test reduction procedure in the following SAR test guidance, where the primary mode is identified in the applicable wireless mode test procedures and the secondary mode is wireless mode being considered for SAR test reduction by that procedure. When the 3G SAR test reduction procedure is not satisfied, it is identified as “otherwise” in the applicable procedures; SAR measurement is required for the secondary mode.

Output power Verification

Maximum output power is verified on the high, middle and low channels according to procedures described in section 5.2 of 3GPP TS 34.121, using the appropriate RMC or AMR with TPC (transmit power control) set to all “1’s” for WCDMA/HSDPA or by applying the required inner loop power control procedures to maintain maximum output power while HSUPA is active. Results for all applicable physical channel configurations (DPCCH, DPDCHn and spreading codes, HSDPA, HSPA) are requied in the SAR report. All configurations that are not supported by the handset or cannot be measured due to technical or equipment limitations must be clearly identified.

Head SAR

SAR for next to the ear head exposure is measured using a 12.2 kbps RMC with TPC bits configured to all “1’s”. The 3G SAR test reduction procedure is applied to AMR configurations with 12.2 kbps RMC as the primary mode. Otherwise, SAR is measured for 12.2 kbps AMR in 3.4 kbps SRB (signaling radio bearer) using the highest reported SAR configuration in 12.2 kbps RMC for head exposure.

1) Body-Worn Accessory SAR

SAR for body-worn accessory configurations is measured using a 12.2 kbps RMC with TPC bits configured to all "1's". The 3G SAR test reduction procedure is applied to other spreading codes and multiple DPDCHn configurations supported by the handset with 12.2 kbps RMC as the primary mode. Otherwise, SAR is measured using an applicable RMC configuration with the corresponding spreaing code or DPDCHn, for the highest reported body-worn accessory exposure SAR configuration in 12.2 kbps RMC. When more than 2 DPDCHn are supported by the handset, it may be necessary to configure additional DPDCHn using FTM (Factory Test Mode) or other chipset based test approaches with parameters similar to those used in 384 kbps and 768 kbps RMC.

2) Handsets with Release 5 HSDPA

The 3G SAR test reduction procedure is applied to HSDPA body-worn accessory configurations with 12.2 kbps RMC as the primary mode. Otherwise, SAR is measured for HSDPA using the HSDPA body SAR procedures in the "Release 5 HSDPA Data Devices" section of this document, for the highest reported SAR body-worn accessory exposure configuration in 12.2 kbps RMC. Handsets with both HSDPA and HSUPA are tested according to Release 6 HSPA test procedures.

HSDPA should be configured according to the UE category of a test device.The number of HSDSCH/ HS-PDSCHs, HARQ processes, minimum inter-TTI interval, transport block sizes and RV coding sequence are defined by the H-set. To maintain a consistent test configuration and stable transmission conditions, QPSK is used in the H-set for SAR testing. HS-DPCCH shouldbe configured with a CQI feedback cycle of 4 ms with a CQI repetition factor of 2 to maintain aconstant rate of active CQI slots. DPCCH and DPDCH gain factors(βc, βd), and HS-DPCCHpower offset parameters (ΔACK, ΔNACK, ΔCQI) should be set according to values indicated in theTable below. The CQI value is determined by the UE category, transport block size, numberof HS-PDSCHs and modulation used in the H-set

Table 2: Subtests for UMTS Release 5 HSDPA

Sub-set	β_c	β_d	β_d (SF)	β_c/β_d	β_{hs} (note 1, note 2)	CM(dB) (note 3)	MPR(dB)
1	2/15	15/15	64	2/15	4/15	0.0	0.0
2	12/15 (note 4)	15/15 (note 4)	64	12/15 (note 4)	24/15	1.0	0.0
3	15/15	8/15	64	15/8	30/15	1.5	0.5
4	15/15	4/15	64	15/4	30/15	1.5	0.5

Note1: Δ_{ACK}, Δ_{NACK} and Δ_{CQI}= 8 ⇔ $A_{hs} = \beta_{hs}/\beta_c$=30/15 ⇔ β_{hs}=30/15*β_c
Note2: CM=1 forβ_c/β_d =12/15, β_{hs}/β_c=24/15.
Note3:For subtest 2 the $\beta_c\beta_d$ ratio of 12/15 for the TFC during the measurement period(TF1,TF0) is achieved by setting the signaled gain factors for the reference TFC (TFC1,TF1) to β_c=11/15 and β_d=15/15.

HSUPA Test Configuration

The 3G SAR test reduction procedure is applied to HSPA (HSUPA/HSDPA with RMC) body-worn accessory configurations with 12.2 kbps RMC as the primary mode. Otherwise, SAR is measured for HSPA using the HSPA body SAR procedures in the "Release 6 HSPA Data Devices" section of this document, for the highest reported body-worn accessory exposure SAR configuration in 12.2 kbps RMC. When VOIP is applicable for next to the ear head exposure in HSPA, the 3G SAR test reduction procedure is applied to HSPA with 12.2 kbps RMC as the primary mode; otherwise, the same HSPA configuration used for body-worn accessory measurements is tested for next to the ear head exposure.

Due to inner loop power control requirements in HSPA, a communication test set is required for output power and SAR tests. The 12.2 kbps RMC, FRC H-set 1 and E-DCH configurations for HSPA are configured according to the β values indicated in Table 2 and other applicable procedures described in the 'WCDMA Handset' and 'Release 5 HSDPA Data Devices' sections of this document

Table 3: Sub-Test 5 Setup for Release 6 HSUPA

Sub-set	β_c	β_d	β_d (SF)	β_c/β_d	β_{hs}(1)	β_{ec}	β_{ed}	β_{ed} (SF)	β_{ed} (codes)	CM (2) (dB)	MPR (dB)	AG(4) Index	E-TFCI
1	11/15(3)	15/15(3)	64	11/15(3)	22/15	209/225	1039/225	4	1	1.0	0.0	20	75

2	6/15	15/15	64	6/15	12/15	12/15	94/75	4	1	3.0	2.0	12	67
3	15/15	9/15	64	15/9	30/15	30/15	β_{ed1}:47/15 β_{ed2}:47/15	4	2	2.0	1.0	15	92
4	2/15	15/15	64	2/15	4/15	2/15	56/75	4	1	3.0	2.0	17	71
5	15/15(4)	15/15(4)	64	15/15(4)	30/15	24/15	134/15	4	1	1.0	0.0	21	81

Note 1: Δ_{ACK}, ΔNACK and Δ_{CQI} = 8 $\Leftrightarrow$ A_{hs} = β_{hs}/β_c = 30/15 $\Leftrightarrow \beta_{hs}$= 30/15 *$\beta_c$.
Note 2: CM = 1 for βc/βd =12/15, β_{hs}/β_c =24/15. For all other combinations of DPDCH, DPCCH, HS- DPCCH, E-DPDCH and E-DPCCH the MPR is based on the relative CM difference.
Note 3: For subtest 1 the βc/βd ratio of 11/15 for the TFC during the measurement period (TF1, TF0) is achieved by setting the signaled gain factors for the reference TFC (TF1, TF1) to βc = 10/15 and βd = 15/15.
Note 4: For subtest 5 the βc/βd ratio of 15/15 for the TFC during the measurement period (TF1, TF0) is achieved by setting the signaled gain factors for the reference TFC (TF1, TF1) to βc = 14/15 and βd = 15/15.
Note 5: Testing UE using E-DPDCH Physical Layer category 1 Sub-test 3 is not required according to TS 25.306 Figure 5.1g.
Note 6: βed can not be set directly; it is set by Absolute Grant Value.

3.10.4 WIFI Test Configuration

The SAR measurement and test reduction procedures are structured according to either the DSSS or OFDM transmission mode configurations used in each standalone frequency band and aggregated band. For devices that operate in exposure configurations that require multiple test positions, additional SAR test reduction may be applied. The maximum output power specified for production units, including tune-up tolerance, are used to determine initial SAR test requirements for the 802.11 transmission modes in a frequency band. SAR is measured using the highest measured maximum output power channel for the initial test configuration. SAR measurement and test reduction for the remaining 802.11 modes and test channels are determined according to measured or specified maximum output power and reported SAR of the initial measurements. The general test reduction and SAR measurement approaches are summarized in the following:

1. The maximum output power specified for production units are determined for all applicable 802.11 transmission modes in each standalone and aggregated frequency band. Maximum output power is measured for the highest maximum output power configuration(s) in each frequency band according to the default power measurement procedures.
2. For OFDM transmission configurations in the 2.4 GHz and 5 GHz bands, an “initial test configuration” is first determined for each standalone and aggregated frequency band according to the maximum output power and tune-up tolerance specified for production units.
a. When the same maximum power is specified for multiple transmission modes in a frequency band, the largest channel bandwidth, lowest order modulation, lowest data rate and lowest order 802.11a/g/n/ac mode is used for SAR measurement, on the highest measured output power channel in the initial test configuration, for each frequency band.
b. SAR is measured for OFDM configurations using the initial test configuration procedures. Additional frequency band specific SAR test reduction may be considered for individual frequency bands
c. Depending on the reported SAR of the highest maximum output power channel tested in the initial test configuration, SAR test reduction may apply to subsequent highest output channels in the initial test configuration to reduce the number of SAR measurements.
3. The Initial test configuration does not apply to DSSS. The 2.4 GHz band SAR test requirements and 802.11b DSSS procedures are used to establish the transmission configurations required for SAR measurement.
4. An “initial test position”is applied to further reduce the number of SAR tests for devices operating in next to the ear, UMPC mini-tablet or hotspot mode exposure configurations that require multiple test positions .
a. SAR is measured for 802.11b according to the 2.4 GHz DSSS procedure using the exposure condition established by the initial test position.
b. SAR is measured for 2.4 GHz and 5 GHz OFDM configurations using the initial test configuration. 802.11b/g/n operating modes are tested independently according to the service requirements in each frequency band. 802.11b/g/n modes are tested on the maximum average output channel.
5. The Initial test position does not apply to devices that require a fixed exposure test position. SAR is measured in a fixed exposure test position for these devices in 802.11b according to the 2.4 GHz DSSS procedure or in 2.4 GHz and 5 GHz OFDM configurations using the initial test configuration procedures .

6. The “subsequent test configuration”procedures are applied to determine if additional SAR measurements are required for the remaining OFDM transmission modes that have not been tested in the initial test configuration. SAR test exclusion is determined according to reported SAR in the initial test configuration and maximum output power specified or measured for these other OFDM configurations.

2.4 GHz and 5GHz SAR Procedures

Separate SAR procedures are applied to DSSS and OFDM configurations in the 2.4 GHz band to simplify DSSS test requirements. For 802.11b DSSS SAR measurements, DSSS SAR procedure applies to fixed exposure test position and initial test position procedure applies to multiple exposure test positions. When SAR measurement is required for an OFDM configuration, the initial test configuration, subsequent test configuration and initial test position procedures are applied. The SAR test exclusion requirements for 802.11g/n OFDM configurations are described in section 5.2.2.

1. 802.11b DSSS SAR Test Requirements

SAR is measured for 2.4 GHz 802.11b DSSS using either a fixed test position or, when applicable, the initial test position procedure. SAR test reduction is determined according to the following:

a. When the reported SAR of the highest measured maximum output power channel (section 3.1) for the exposure configuration is ≤ 0.8 W/kg, no further SAR testing is required for 802.11b DSSS in that exposure configuration.
b. When the reported SAR is > 0.8 W/kg, SAR is required for that exposure configuration using the next highest measured output power channel. When any reported SAR is > 1.2 W/kg, SAR is required for the third channel; i.e., all channels require testing.

1. 2.4 GHz 802.11g/n OFDM SAR Test Exclusion Requirements

When SAR measurement is required for 2.4 GHz 802.11g/n OFDM configurations, the measurement and test reduction procedures for OFDM are applied (section 5.3). SAR is not required for the following 2.4 GHz OFDM conditions.

a. When KDB Publication 447498 SAR test exclusion applies to the OFDM configuration
b. When the highest reported SAR for DSSS is adjusted by the ratio of OFDM to DSSS specified maximum output power and the adjusted SAR is ≤ 1.2 W/kg.

2. SAR Test Requirements for OFDM Configurations

When SAR measurement is required for 802.11 a/g/n/ac OFDM configurations, each standalone and frequency aggregated band is considered separately for SAR test reduction. When the same transmitter and antenna(s) are used for U-NII-1 and U-NII-2A bands, additional SAR test reduction applies. When band gap channels between U-NII-2C band and 5.8 GHz U-NII-3 or §15.247 band are supported, the highest maximum output power transmission mode configuration and maximum output power channel across the bands must be used to determine SAR test reduction, according to the initial test configuration and subsequent test configuration requirements.20 In applying the initial test configuration and subsequent test configuration procedures, the 802.11 transmission configuration with the highest specified maximum output power and the channel within a test configuration with the highest measured maximum output power should be clearly distinguished to apply the procedures.

3. OFDM Transmission Mode SAR Test Configuration and Channel Selection Requirements

The initial test configuration for 2.4 GHz and 5 GHz OFDM transmission modes is determined by the 802.11 configuration with the highest maximum output power specified for production units, including tune-up tolerance, in each standalone and aggregated frequency band. SAR for the initial test configuration is measured using the highest maximum output power channel determined by the default power measurement procedures (section 4). When multiple configurations in a frequency band have the same specified maximum output power, the initial test configuration is determined according to the following steps applied sequentially.

a. The largest channel bandwidth configuration is selected among the multiple configurations with the same specified maximum output power.
b. If multiple configurations have the same specified maximum output power and largest channel bandwidth, the lowest order modulation among the largest channel bandwidth configurations is selected.
c. If multiple configurations have the same specified maximum output power, largest channel bandwidth and lowest order modulation, the lowest data rate configuration among these configurations is selected.
d. When multiple transmission modes (802.11a/g/n/ac) have the same specified maximum output power, largest channel bandwidth, lowest order modulation and lowest data rate, the lowest order 802.11 mode is selected; i.e., 802.11a is chosen over 802.11n then 802.11ac or 802.11g is chosen over 802.11n.

After an initial test configuration is determined, if multiple test channels have the same measured maximum output power, the channel chosen for SAR measurement is determined according to the following. These

channel selection procedures apply to both the initial test configuration and subsequent test configuration(s), with respect to the default power measurement procedures or additional power measurements required for further SAR test reduction. The same procedures also apply to subsequent highest output power channel(s) selection.

a. Channels with measured maximum output power within ¼ dB of each other are considered to have the same maximum output.
b. When there are multiple test channels with the same measured maximum output power, the channel closest to mid-band frequency is selected for SAR measurement.
c. When there are multiple test channels with the same measured maximum output power and equal separation from mid-band frequency; for example, high and low channels or two mid-band channels, the higher frequency (number) channel is selected for SAR measurement.

Initial Test Configuration Procedures

An initial test configuration is determined for OFDM transmission modes according to the channel bandwidth, modulation and data rate combination(s) with the highest maximum output power specified for production units in each standalone and aggregated frequency band. SAR is measured using the highest measured maximum output power channel. For configurations with the same specified or measured maximum output power, additional transmission mode and test channel selection procedures are required (see section 5.3.2). SAR test reduction of subsequent highest output test channels is based on the reported SAR of the initial test configuration.

For next to the ear, hotspot mode and UMC mini-tablet exposure configurations where multiple test positions are required, the initial test position procedure is applied to minimize the number of test positions required for SAR measurement using the initial test configuration transmission mode.23 For fixed exposure conditions that do not have multiple SAR test positions, SAR is measured in the transmission mode determined by the initial test configuration. When the reported SAR of the initial test configuration is > 0.8 W/kg, SAR measurement is required for the subsequent next highest measured output power channel(s) in the initial test configuration until the reported SAR is ≤ 1.2 W/kg or all required channels are tested.

4. Subsequent Test Configuration Procedures

SAR measurement requirements for the remaining 802.11 transmission mode configurations that have not been tested in the initial test configuration are determined separately for each standalone and aggregated frequency band, in each exposure condition, according to the maximum output power specified for production units. The initial test position procedure is applied to next to the ear, UMPC mini-tablet and hotspot mode configurations. When the same maximum output power is specified for multiple transmission modes, the procedures in section 5.3.2 are applied to determine the test configuration. Additional power measurements may be required to determine if SAR measurements are required for subsequent highest output power channels in a subsequent test configuration. The subsequent test configuration and SAR measurement procedures are described in the following.

a. When SAR test exclusion provisions of KDB Publication 447498 are applicable and SAR measurement is not required for the initial test configuration, SAR is also not required for the next highest maximum output power transmission mode subsequent test configuration(s) in that frequency band or aggregated band and exposure configuration.
b. When the highest reported SAR for the initial test configuration (when applicable, include subsequent highest output channels), according to the initial test position or fixed exposure position requirements, is adjusted by the ratio of the subsequent test configuration to initial test configuration specified maximum output power and the adjusted SAR is ≤ 1.2 W/kg, SAR is not required for that subsequent test configuration.
c. The number of channels in the initial test configuration and subsequent test configuration can be different due to differences in channel bandwidth. When SAR measurement is required for a subsequent test configuration and the channel bandwidth is smaller than that in the initial test configuration, all channels in the subsequent test configuration that overlap with the larger bandwidth channel tested in the initial test configuration should be used to determine the highest maximum output power channel. This step requires additional power measurement to identify the highest maximum output power channel in the subsequent test configuration to determine SAR test reduction.

1). SAR should first be measured for the channel with highest measured output power in the subsequent test configuration.

2). SAR for subsequent highest measured maximum output power channels in the subsequent test configuration is required only when the reported SAR of the preceding higher maximum output power channel(s) in the subsequent test configuration is > 1.2 W/kg or until all required channels are tested.

a) For channels with the same measured maximum output power, SAR should be measured using the channel closest to the center frequency of the larger channel bandwidth channel in the initial test configuration.

d. SAR measurements for the remaining highest specified maximum output power OFDM transmission mode configurations that have not been tested in the initial test configuration (highest maximum output) or subsequent test configuration(s) (subsequent next highest maximum output power) is determined by applying the subsequent test configuration procedures in this section to the remaining configurations according to the following:

1) replace “subsequent test configuration” with “next subsequent test configuration” (i.e., subsequent next highest specified maximum output power configuration)
2) replace “initial test configuration” with “all tested higher output power configurations.

3.11. Power Reduction

The product without any power reduction.

3.12. Power Drift

To control the output power stability during the SAR test, SAR system calculates the power drift by measuring the E-field at the same location at the beginning and at the end of the measurement for each test position. This ensures that the power drift during one measurement is within 5%.

4. TEST CONDITIONS AND RESULTS

4.1. Conducted Power Results

According KDB 447498D01 General RF Exposure Guidance v06 Section 4.1 2) states that "Unless it is specified differently in the published RF exposure KDB procedures, these requirements also apply to test reduction and test exclusion considerations. Time-averaged maximum conducted output power applies to SAR and, as required by § 2.1091(c), time-averaged ERP applies to MPE. When an antenna port is not available on the device to support conducted power measurement, such as FRS and certain Part 15 transmitters with built-in integral antennas, the maximum output power allowed for production units should be used to determine RF exposure test exclusion and compliance."

<GSM Conducted Power>

General Note:

1. Per KDB 447498 D01v06, the maximum output power channel is used for SAR testing and for further SAR test reduction.
2. According to October 2013TCB Workshop, for GSM / GPRS / EGPRS, the number of time slots to test for SAR should correspond to the highest frame-average maximum output power configuration, considering the possibility of e.g. 3rd party VoIP operation for head and body-worn SAR testing, the EUT was set in GPRS (4Tx slot) for GSM850/GSM1900 band due to their highest frame-average power.
3. For hotspot mode SAR testing, GPRS should be evaluated, therefore the EUT was set in GPRS (4 Tx slots) for GSM850/GSM1900 band due to its highest frame-average power.

Conducted power measurement results for GSM850/PCS1900

GSM 850		Tune-up	Burst Conducted power (dBm)			Division Factors	Tune-up	Average power (dBm)		
			Channel/Frequency(MHz)					Channel/Frequency(MHz)		
		Max	128/ 824.2	190/ 836.6	251/ 848.8		Max	128/ 824.2	190/ 836.6	251/8 48.8
GSM		33.00	32.70	32.69	32.68	-9.03dB	23.97	23.67	23.66	23.65
GPRS (GMSK)	1TX slot	33.00	32.52	32.57	32.51	-9.03dB	23.97	23.49	23.54	23.48
	2TX slot	31.00	30.95	30.97	30.98	-6.02dB	24.98	24.93	24.95	24.96
	3TX slot	**30.00**	**29.50**	**29.53**	**29.44**	**-4.26dB**	**25.74**	**25.24**	**25.27**	**25.18**
	4TX slot	28.00	28.00	28.00	27.96	-3.01dB	24.99	24.99	24.99	24.95
EGPRS (8PSK)	1TX slot	26.00	25.99	25.99	25.95	-9.03dB	16.97	16.96	16.96	16.92
	2TX slot	24.50	24.50	24.50	24.44	-6.02dB	18.48	18.48	18.48	18.42
	3TX slot	23.00	22.96	23.00	22.94	-4.26dB	18.74	18.70	18.74	18.68
	4TX slot	21.50	21.50	21.48	21.44	-3.01dB	18.49	18.49	18.47	18.43
GSM 1900		Tune-up	Burst Conducted power (dBm)			Division Factors	Tune-up	Average power (dBm)		
			Channel/Frequency(MHz)					Channel/Frequency(MHz)		
		Max	512/ 1850.2	661/ 1880	810/ 1909.8		Max.	512/ 1850.2	661/ 1880	810/ 1909. 8
GSM		30.00	29.69	29.70	29.62	-9.03dB	20.97	20.66	20.67	20.59
GPRS (GMSK)	1TX slot	30.00	29.55	29.57	29.49	-9.03dB	20.97	20.52	20.54	20.46
	2TX slot	28.50	27.95	28.01	27.96	-6.02dB	22.48	21.93	21.99	21.94
	3TX slot	**27.00**	**26.46**	**26.51**	**26.44**	**-4.26dB**	**22.74**	**22.20**	**22.25**	**22.18**
	4TX slot	25.50	24.98	25.02	24.93	-3.01dB	22.49	21.97	22.01	21.92
EGPRS (8PSK)	1TX slot	26.00	25.49	25.51	25.45	-9.03dB	16.97	16.46	16.48	16.42
	2TX slot	24.00	23.98	23.98	23.97	-6.02dB	17.98	17.96	17.96	17.95
	3TX slot	23.00	22.49	22.52	22.44	-4.26dB	18.74	18.23	18.26	18.18
	4TX slot	21.00	21.00	21.00	20.95	-3.01dB	17.99	17.99	17.99	17.94

Notes:

1. Division Factors

To average the power, the division factor is as follows:

1TX-slot = 1 transmit time slot out of 8 time slots=> conducted power divided by (8/1) => -9.00dB

2TX-slots = 2 transmit time slots out of 8 time slots=> conducted power divided by (8/2) => -6.00dB

3TX-slots = 3 transmit time slots out of 8 time slots=> conducted power divided by (8/3) => -4.26dB

4TX-slots = 4 transmit time slots out of 8 time slots=> conducted power divided by (8/4) => -3.00dB

2. According to the conducted power as above, the GPRS measurements are performed with 3Txslot for GPRS850 and 3Txslot GPRS1900.

<UMTS Conducted Power>

The following tests were conducted according to the test requirements outlines in 3GPP TS 34.121 specification.A summary of these settings are illustrated below:

HSDPA Setup Configuration:

a. The EUT was connected to Base Station E5515C referred to theSetup Configuration.
b. The RF path losses were compensated into the measurements.
c. A call was established between EUT and Base Station with following setting:
   i. Set Gain Factors (β_c and β_d) and parameters were set according to each
   ii. Specific sub-test in the following table, C10.1.4, quoted from the TS 34.121
   iii. Set RMC 12.2Kbps + HSDPA mode.
   iv. Set Cell Power = -86 dBm
   v. Set HS-DSCH Configuration Type to FRC (H-set 1, QPSK)
   vi. Select HSDPA Uplink Parameters
   vii. Set Delta ACK, Delta NACK and Delta CQI = 8
   viii. Set Ack-Nack Repetition Factor to 3
   ix. Set CQI Feedback Cycle (k) to 4 ms
   x. Set CQI Repetition Factor to 2
   xi. Power Ctrl Mode = All Up bits
d. The transmitted maximum output power was recorded.

Table C.10.1.4: β values for transmitter characteristics tests with HS-DPCCH

Sub-test	β_c	β_d	β_d (SF)	β_c/β_d	β_{HS} (Note1, Note 2)	CM (dB) (Note 3)	MPR (dB) (Note 3)
1	2/15	15/15	64	2/15	4/15	0.0	0.0
2	12/15 (Note 4)	15/15 (Note 4)	64	12/15 (Note 4)	24/15	1.0	0.0
3	15/15	8/15	64	15/8	30/15	1.5	0.5
4	15/15	4/15	64	15/4	30/15	1.5	0.5

Note 1: Δ_{ACK}, Δ_{NACK} and Δ_{CQI} = 30/15 with β_{hs} = 30/15 * β_c .

Note 2: For the HS-DPCCH power mask requirement test in clause 5.2C, 5.7A, and the Error Vector Magnitude (EVM) with HS-DPCCH test in clause 5.13.1A, and HSDPA EVM with phase discontinuity in clause 5.13.1AA, Δ_{ACK} and Δ_{NACK} = 30/15 with β_{hs} = 30/15 * β_c , and Δ_{CQI} = 24/15 with β_{hs} = 24/15 * β_c .

Note 3: CM = 1 for β_c/β_d =12/15, β_{hs}/β_c=24/15. For all other combinations of DPDCH, DPCCH and HS-DPCCH the MPR is based on the relative CM difference. This is applicable for only UEs that support HSDPA in release 6 and later releases.

Note 4: For subtest 2 the β_c/β_d ratio of 12/15 for the TFC during the measurement period (TF1, TF0) is achieved by setting the signalled gain factors for the reference TFC (TF1, TF1) to β_c = 11/15 and β_d = 15/15.

Setup Configuration

HSUPA Setup Configuration:

a. The EUT was connected to Base StationR&S CMU200 referred to the Setup Configuration.
b. The RF path losses were compensated into the measurements.
c. A call was established between EUT and Base Station with following setting * :
   i. Call Configs = 5.2B, 5.9B, 5.10B, and 5.13.2B with QPSK
   ii. Set the Gain Factors (β_c and β_d) and parameters (AG Index) were set according to each specific sub-test in the following table, C11.1.3, quoted from the TS 34.121
   iii. Set Cell Power = -86 dBm
   iv. Set Channel Type = 12.2k + HSPA
   v. Set UE Target Power
   vi. Power Ctrl Mode= Alternating bits
   vii. Set and observe the E-TFCI

viii. Confirm that E-TFCI is equal to the target E-TFCI of 75 for sub-test 1, and other subtest's E-TFCI

d. The transmitted maximum output power was recorded.

Table C.11.1.3: β values for transmitter characteristics tests with HS-DPCCH and E-DCH

Sub-test	β_c	β_d	β_d (SF)	β_c/β_d	β_{HS} (Note1)	β_{ec}	β_{ed} (Note 5) (Note 6)	β_{ed} (SF)	β_{ed} (Codes)	CM (dB) (Note 2)	MPR (dB) (Note 2)	AG Index (Note 6)	E-TFCI
1	11/15 (Note 3)	15/15 (Note 3)	64	11/15 (Note 3)	22/15	209/225	1309/225	4	1	1.0	0.0	20	75
2	6/15	15/15	64	6/15	12/15	12/15	94/75	4	1	3.0	2.0	12	67
3	15/15	9/15	64	15/9	30/15	30/15	$\beta_{ed}1$: 47/15 $\beta_{ed}2$: 47/15	4 4	2	2.0	1.0	15	92
4	2/15	15/15	64	2/15	4/15	2/15	56/75	4	1	3.0	2.0	17	71
5	15/15 (Note 4)	15/15 (Note 4)	64	15/15 (Note 4)	30/15	24/15	134/15	4	1	1.0	0.0	21	81

Note 1: Δ_{ACK}, Δ_{NACK} and Δ_{CQI} = 30/15 with β_{hs} = 30/15 * β_c .

Note 2: CM = 1 for β_c/β_d =12/15, β_{hs}/β_c=24/15. For all other combinations of DPDCH, DPCCH, HS- DPCCH, E-DPDCH and E-DPCCH the MPR is based on the relative CM difference.

Note 3: For subtest 1 the β_c/β_d ratio of 11/15 for the TFC during the measurement period (TF1, TF0) is achieved by setting the signalled gain factors for the reference TFC (TF1, TF1) to β_c = 10/15 and β_d = 15/15.

Note 4: For subtest 5 the β_c/β_d ratio of 15/15 for the TFC during the measurement period (TF1, TF0) is achieved by setting the signalled gain factors for the reference TFC (TF1, TF1) to β_c = 14/15 and β_d = 15/15.

Note 5: In case of testing by UE using E-DPDCH Physical Layer category 1, Sub-test 3 is omitted according to TS25.306 Table 5.1g.

Note 6: β_{ed} can not be set directly, it is set by Absolute Grant Value.

General Note

1. Per KDB 941225 D01, RMC 12.2kbps setting is used to evaluate SAR. If AMR 12.2kbps power is < 0.25dB higher than RMC 12.2kbps, SAR tests with AMR 12.2kbps can be excluded.
2. By design, AMR and HSDPA/HSUPA RF power will not be larger than RMC 12.2kbps, detailed information is included in Tune-up Procure exhibit.
3. It is expected by the manufacturer that MPR for some HSDPA/HSUPA subtests may differ from the specification of 3GPP, according to the chipset implementation in this model. The implementation and expected deviation are detailed in tune-up procedure exhibit.

Conducted Power Measurement Results(WCDMA Band II /V)

Item	Band	FDD Band V result (dBm)			FDD Band II result (dBm)		
		Test Channel			Test Channel		
		4132/ 826.4	4183/ 836.6	4233/ 846.6	9262/ 1852.4	9400/ 1880	9538/ 1907.6
RMC	12.2kbps	23.49	23.38	23.51	23.44	23.57	23.62
HSDPA	Subtest 1	22.76	22.87	22.87	22.87	22.99	22.90
	Subtest 2	22.80	22.89	22.79	22.83	22.77	22.70
	Subtest 3	22.77	22.74	22.82	22.81	22.75	22.78
	Subtest 4	22.87	22.77	22.74	22.84	22.70	22.82
HSUPA	Subtest 1	22.81	22.79	22.86	22.75	22.75	22.79
	Subtest 2	22.70	22.88	22.90	22.78	22.86	22.80
	Subtest 3	22.88	22.88	22.70	22.76	22.78	22.72
	Subtest 4	22.76	22.87	22.77	22.86	22.72	22.89
	Subtest 5	22.71	22.76	22.90	22.75	22.78	22.78

Note:1.When the maximum output power and tune-up tolerance specified for production units in a secondary mode is ≤1/2dB higher than the primary mode (RMC12.2kbps) or when the highest reported SAR of the primary mode is scaled by the ratio of specified maximum output power and tune-up tolerance of secondary to primary mode and the adjusted SAR is ≤ 1.2 W/kg, SAR measurement is not required for the secondary mode.

LTE Band2

BW (MHz)	Frequency (MHz)	RB Configuration		Average Power [dBm]	
		Size	Offset	QPSK	16QAM
1.4	1850.7	1	0	21.51	21.26
		1	2	21.57	21.28
		1	5	21.47	21.31
		3	0	21.61	20.33
		3	1	21.58	20.36
		3	3	21.57	20.38
		6	0	20.57	19.78
	1880.0	1	0	21.31	20.55
		1	2	21.32	20.57
		1	5	21.43	20.49
		3	0	21.25	20.12
		3	1	21.25	20.12
		3	3	21.28	20.04
		6	0	20.27	19.26
	1909.3	1	0	21.07	19.80
		1	2	21.07	19.74
		1	5	21.03	19.72
		3	0	21.16	19.98
		3	1	21.06	19.97
		3	3	21.14	20.03
		6	0	20.03	19.09
3	1851.5	1	0	21.43	20.44
		1	8	21.47	20.44
		1	14	21.44	20.40
		8	0	20.48	19.67
		8	4	20.49	19.68
		8	7	20.54	19.63
		15	0	20.44	19.60
	1880.0	1	0	21.24	19.84
		1	8	21.22	19.81
		1	14	21.20	19.84
		8	0	20.16	19.30
		8	4	20.16	19.30
		8	7	20.28	19.30
		15	0	20.27	19.30
	1908.5	1	0	21.05	19.73
		1	8	21.05	19.70
		1	14	21.00	19.68
		8	0	20.01	19.31
		8	4	20.05	19.30
		8	7	20.08	19.28
		15	0	20.09	19.08
5	1852.5	1	0	21.45	20.03
		1	12	21.43	19.90
		1	24	21.37	19.84
		12	0	20.44	19.56
		12	6	20.61	19.56
		12	13	20.45	19.60
		25	0	20.49	19.72
	1880.0	1	0	21.37	19.79
		1	12	21.22	19.71
		1	24	21.31	19.84
		12	0	20.29	19.37
		12	6	20.38	19.33

		12	13	20.26	19.33
		25	0	20.29	19.44
	1907.5	1	0	20.93	20.26
		1	12	20.98	20.39
		1	24	20.96	20.33
		12	0	20.09	19.35
		12	6	20.07	19.17
		12	13	20.07	19.22
		25	0	20.13	19.19
10	1855.0	1	0	21.45	20.65
		1	24	21.37	20.51
		1	49	21.39	20.43
		25	0	20.62	19.62
		25	12	20.55	19.64
		25	25	20.33	19.44
		50	0	20.50	19.46
	1880.0	1	0	21.43	20.51
		1	24	21.20	20.30
		1	49	21.27	20.41
		25	0	20.35	19.47
		25	12	20.34	19.48
		25	25	20.29	19.46
		50	0	20.22	19.29
	1905.0	1	0	21.01	20.07
		1	24	20.93	20.03
		1	49	21.03	20.07
		25	0	20.18	19.38
		25	12	20.10	19.37
		25	25	20.16	19.22
		50	0	20.17	19.25
15	1857.5	1	0	21.49	20.68
		1	38	21.41	20.45
		1	74	21.42	20.44
		37	0	20.33	20.46
		37	18	20.47	20.47
		37	37	20.47	20.46
		75	0	20.46	19.52
	1880.0	1	0	21.37	20.53
		1	38	21.14	20.20
		1	74	21.33	20.57
		37	0	20.26	20.25
		37	18	20.34	20.34
		37	37	20.34	20.34
		75	0	20.35	19.27
	1902.5	1	0	21.19	20.44
		1	38	20.98	20.15
		1	74	20.94	20.20
		37	0	20.19	20.15
		37	18	20.14	20.14
		37	37	20.14	20.13
		75	0	20.13	19.21
20	1860.0	1	0	21.69	20.61
		1	49	21.58	20.46
		1	99	21.62	20.56
		50	0	20.42	19.61
		50	25	20.55	19.62
		50	50	20.37	19.58
		100	0	20.35	19.49

	1880.0	1	0	21.48	20.40
		1	49	21.31	20.10
		1	99	21.62	20.54
		50	0	20.45	19.59
		50	25	20.54	19.58
		50	50	20.48	19.54
		100	0	20.30	19.29
	1900.0	1	0	21.66	20.92
		1	49	21.26	20.49
		1	99	21.23	20.45
		50	0	20.40	19.41
		50	25	20.40	19.41
		50	50	20.17	19.25
		100	0	20.20	19.28

LTE Band5

BW (MHz)	Frequency (MHz)	RB Configuration		Average Power [dBm]	
		Size	Offset	QPSK	16QAM
1.4	824.7	1	0	22.72	22.32
		1	2	22.64	22.36
		1	5	22.66	22.28
		3	0	22.81	21.47
		3	1	22.74	21.49
		3	3	22.72	21.47
		6	0	21.68	20.89
	836.5	1	0	22.74	21.40
		1	2	22.73	21.39
		1	5	22.75	21.40
		3	0	22.73	21.40
		3	1	22.74	21.40
		3	3	22.70	21.37
		6	0	21.69	20.72
	848.3	1	0	22.26	21.48
		1	2	22.28	21.54
		1	5	22.24	21.56
		3	0	22.33	21.07
		3	1	22.24	21.08
		3	3	22.31	21.15
		6	0	21.33	20.59
3	825.5	1	0	22.61	21.59
		1	8	22.57	21.59
		1	14	22.61	21.69
		8	0	21.70	20.85
		8	4	21.70	20.88
		8	7	21.83	20.83
		15	0	21.66	20.61
	836.5	1	0	22.66	21.39
		1	8	22.75	21.38
		1	14	22.68	21.34
		8	0	21.77	20.86
		8	4	21.78	20.86
		8	7	21.72	20.79
		15	0	21.76	20.61
	847.5	1	0	22.41	21.66
		1	8	22.28	21.57
		1	14	22.30	21.60
		8	0	21.27	20.40
		8	4	21.31	20.41
		8	7	21.38	20.46
		15	0	21.28	20.33
5	826.5	1	0	22.61	21.00
		1	12	22.61	21.11
		1	24	22.55	21.12
		12	0	21.64	20.45
		12	6	21.63	20.41
		12	13	21.70	20.68
		25	0	21.71	20.80
	836.5	1	0	22.56	21.82
		1	12	22.57	21.83
		1	24	22.56	21.66
		12	0	21.65	20.92

		12	6	21.66	20.92
		12	13	21.67	20.83
		25	0	21.69	20.69
	846.5	1	0	22.60	21.23
		1	12	22.49	21.11
		1	24	22.42	21.07
		12	0	21.51	20.32
		12	6	21.53	20.29
		12	13	21.33	20.15
		25	0	21.34	20.27
10	829.0	1	0	22.60	21.68
		1	24	22.55	21.57
		1	49	22.63	21.61
		25	0	21.70	20.68
		25	12	21.69	20.70
		25	25	21.60	20.72
		50	0	21.73	20.52
	836.5	1	0	22.55	21.46
		1	24	22.45	21.58
		1	49	22.46	21.38
		25	0	21.69	20.91
		25	12	21.71	20.91
		25	25	21.46	20.67
		50	0	21.71	20.76
	844.0	1	0	22.62	21.94
		1	24	22.51	21.94
		1	49	22.25	21.69
		25	0	21.50	20.58
		25	12	21.46	20.58
		25	25	21.35	20.35
		50	0	21.39	20.42

LTE Band7

BW (MHz)	Frequency (MHz)	RB Configuration		Average Power [dBm]	
		Size	Offset	QPSK	16QAM
5	2502.5	1	0	21.81	20.34
		1	12	21.85	20.28
		1	24	21.78	20.25
		12	0	20.90	19.93
		12	6	20.91	19.93
		12	13	20.84	19.90
		25	0	20.73	19.97
	2535.0	1	0	21.71	20.17
		1	12	21.76	20.29
		1	24	21.82	20.32
		12	0	20.77	19.78
		12	6	20.75	19.79
		12	13	20.84	19.97
		25	0	20.74	19.95
	2567.5	1	0	21.57	21.04
		1	12	21.58	21.02
		1	24	21.65	21.13
		12	0	20.78	20.06
		12	6	20.90	20.03
		12	13	20.90	20.02
		25	0	20.78	19.99
10	2505.0	1	0	21.71	20.63
		1	24	21.66	20.53
		1	49	21.65	20.49
		25	0	20.88	19.79
		25	12	20.86	19.79
		25	25	20.82	19.82
		50	0	20.66	19.74
	2535.0	1	0	21.54	20.74
		1	24	21.60	20.73
		1	49	21.89	20.96
		25	0	20.69	19.80
		25	12	20.79	19.79
		25	25	20.84	19.95
		50	0	20.72	19.85
	2565.0	1	0	21.84	20.71
		1	24	21.75	20.91
		1	49	21.82	20.84
		25	0	20.86	20.09
		25	12	20.88	20.07
		25	25	20.87	20.12
		50	0	20.86	19.91
15	2507.5	1	0	20.20	19.25
		1	38	20.22	19.16
		1	74	20.00	18.82
		37	0	19.28	19.29
		37	18	19.29	19.29
		37	37	19.30	19.29
		75	0	19.29	18.36
	2535.0	1	0	19.96	19.24
		1	38	20.10	19.28
		1	74	20.47	19.62
		37	0	19.23	19.35

		37	18	19.34	19.34
		37	37	19.34	19.34
		75	0	19.33	18.32
	2562.5	1	0	20.52	19.65
		1	38	20.40	19.61
		1	74	20.34	19.73
		37	0	19.31	19.27
		37	18	19.27	19.26
		37	37	19.26	19.26
		75	0	19.26	18.55
20	2510.0	1	0	20.42	19.00
		1	49	20.26	18.75
		1	99	19.94	18.26
		50	0	19.21	18.31
		50	25	19.26	18.33
		50	50	18.96	18.30
		100	0	19.20	18.24
	2535.0	1	0	20.21	18.97
		1	49	20.48	19.19
		1	99	20.87	19.53
		50	0	19.24	18.38
		50	25	19.21	18.38
		50	50	19.44	18.65
		100	0	19.43	18.47
	2560	1	0	20.78	20.24
		1	49	20.49	19.80
		1	99	20.53	19.76
		50	0	19.58	18.63
		50	25	19.35	18.63
		50	50	19.51	18.52
		100	0	19.47	18.63