5 Projector connection

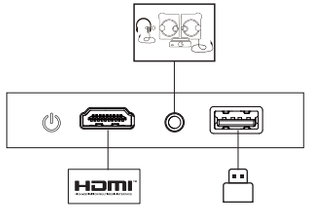

1. Selection of signal source
Press the signal source key "S" on the remote control to enter the signal source menu interface. Use the arrow keys and the confirm key to select the desired signal source.
2. Computer connection
Connect the computer through the projector: HDMI (high-definition interface)
Steps: switch the projector signal source > connect the corresponding data cable > switch the notebook output mode
Method: 1: XP system Fn + dual screen key (F1--F12 draws two screens), switch 2-3 times
Method 2: The computer operating system is Windows7 and above for users of Windows7,
Just press ⊞ +P on your keyboard, select the "Copy" option to connect.
If the above operation does not If it doesn't work, please update your computer's graphics card driver.

Attachment: The output buttons of different brands of notebooks are as follows:

Lenovo	Fn+F3	Fujitsu	Fn+F10
Dell	Fn+F8	Haier	Fn+F3
HP	Fn+F4	NEC	Fn+F3
ThinkPad	Fn+F7	Panasonic	Fn+F3
Asus	Fn+F8	Sharp	Fn+F5
Acer	Fn+F5	Hitachi	Fn+F7
Samsung	Fn+F4	TOSHIBA	Fn+F5
Sony	Fn+F7		

3. AV video equipment connection
Connect the 3in1 video adapter cable to the AV interface of the projector, and select the multimedia signal channel: "AV".
4. 3.5mm audio device connection
It can be connected to 3.5mm headphones and other wired audio equipment.

6 Wireless projection

IOS device
Airplay: Using this function, the projector and iPhone/iPad can be displayed on the same screen.

Note: Make sure the projector and the phone are connected to the same WiFi network (or the same hotspot).

The operation steps on the mobile terminal are as follows (the projection terminal does not need to be set);
Step 1: Swipe up at the bottom of the phone screen
Step 2: The console interface appears, click the AirPlay button
Step 3: Select the device you want to cast to and turn on the mirroring switch

The name of the projection device can be defined in the screen projection APP, which is subject to the specific machine; it is recommended to connect Receive 5G WiFi to avoid the same screen stuck;

Android device
Miracast: Using this function, the projector and Android phone/tablet can be displayed on the same screen Show.

The operation steps of the projector and mobile phone are as follows:
Step 1: Projector, go to Settings>Network Switch>Turn on WiFi Switch, no need to connect to the Internet network;
Step 2: On the mobile phone (take Xiaomi as an example), open the WiFi port, go to Settings > Other Connections Type>Wireless Display;
Step 3: During the connection process, a connection invitation appears on the projector, click Accept.

Different mobile phones have different Miracast setting paths and names. Common names are: Media Input Output/projection screen/multi-screen interaction, etc. Please refer to the mobile phone for details.
Note: Due to the variety of mobile phones, it cannot be guaranteed that all mobile phone models are compatible with the same screen
Note: Due to the variety of mobile phones, it cannot be guaranteed that all mobile phone models are compatible with the same screen

7 Maintenance of the projector

Smart projector is a high-tech product integrating precision optics, electronics and machinery.If it is not properly maintained in daily use, it will affect the performance of the projector.longevity and effectiveness. The importance of maintaining the projector is as follows:

1. Dustproof: Due to the influence of the environment, excessive dust on the projector will affect the heat dissipation.Clean the dust filter of the projector in one and a half months in actual environment.

2. Ventilation: Since the projector is an integrated sound and photoelectric device, the light source generates heat when it works by itself.During installation and use, make sure that there are no objects around to block the entrance of the projector.The air vent and the air outlet, because the heat dissipation of the projector depends on the convection of cold air to improve the projector's performance.Working stability and longevity.

3. Lens maintenance: The lens is the core component of the projector, which is directly related to the clarity of the picture.Sharpness and effect. Too much dust on the lens will affect the image quality. When the lens is dirty, please use a soft Wipe the glass on the surface of the lens with a cotton cloth, do not use a hard cloth or something corrosive.Wipe the lens.

4. Cleaning: Please clean up the excessive dust on the surface of the projector in time, too much dust will affect the fuselage heat dissipation.

5. Moisture-proof: The projector is easily attacked by humid air, and the working humidity of the projector is about Between 45%-60%, the air is too humid and will affect the working stability of the projector.

6. Shockproof: The projector must be strictly prevented from strong impact, extrusion and vibration. especially when the machine is Try not to move and knock the projector during normal work, it may cause the internal electricity of the machine.road failure.

7. Do not install the projector on an unstable, shaky or uneven table.

8. Do not place containers filled

8 Product Warranty Policy Description

1. Within 7 days from the date of purchase, if the fault is not caused by improper use or man-made reasons, determine The failure caused by the product components can be enjoyed with a valid purchase receipt and three-guarantee certificate Return service.
2. Within 8-15 days from the date of purchase, if the malfunction is not caused by improper use or man-made reasons,If it is determined that the fault is caused by the product components, with the valid purchase receipt and the three-guarantee certificate,
Enjoy free exchange.
3. The product warranty service period takes effect from the date of production, and the mainframe of the projector series products (excluding accessories/accessories) 13 months warranty, not caused by improper use or human reasons The fault is determined to be caused by the main components of the product, with valid purchase receipts and A valid three-guarantee certificate can enjoy free maintenance service.
4 The company has the final right to interpret the Three Guarantees service. The following issues do not enjoy the Three Guarantees Service:
①The equipment shell, manual, packaging, promotional items and random gifts are not included in the Three Guarantees service;
②The user disassembles and assembles by himself or disassembles, refits or disassembles, or modifies or disassembles, or disassembles, installs or disassembles without the authorization of the company or the designated service and maintenance point.Damage caused by upgrades, etc.;
③ Damage to the product caused by the use of spare parts not manufactured or sold by the company;
④ Damage caused by not using the machine in accordance with the product instruction manual;
⑤ Fail to provide valid purchase bills and valid three-guarantee certificates;
⑥ Damage caused by force majeure.

Warranty Card

Customer's name:
Mr./Miss
Contact phone:
Customer's address:
Model(S/N):
Stores address:
Stores address:
Date of purchase:

PROJECTOR

This manual apply to:
A86W

QUICK GUIDE

STATEMENT
The projector is product grade A,in living Environment,the projector may cause wireless disturbance,may be users should do something effectively to the disturbance.

Warning
High brightness lamp!
Avoid staring or directly looking at the light,especially for children.

Tips
1.Please wash the anti-dust mesh once a month in order to protect your projector!
2.Before using this machine,please remove the protective membrane from the top & bottom cover.

"The Adopted Trademarks HDMI, HDMI High-Definition Multimedia Interface, and the HDMI Logo are trademarks or registered trademarks of HDMI Licensing Administrator, Inc. in the United States and othercountries."

Please read this<GUIDE>carefully before use;
The company reserves the right of final interpretation;
Appearance of the product and the UI please in kind prevail;
If product technology or software upgrades, without prior notice.

1 Important Notes

How to use the device correctly:

1. Do not point the lens towards the human eye to avoid damage to the eyes caused by the strong light of the lens after the machine is turned on.
2. Please do not block the air inlet/outlet of the device to avoid damage to the internal electronic devices due to the failure of the device to dissipate heat normally.
3. Do not use paper, cloth and other cleaning tools to directly wipe the lens to avoid damage to the lens; please use a cleaning air blower to remove dust on the surface of the lens.
4. Please keep the device and its parts and accessories out of the reach of children.
5. Please ensure that the device is used in a dry and ventilated environment.
6. Do not store and use the device in overheated or cold places. High (low) temperature will shorten the life of electronic devices; the allowable operating environment is 0°C~35°C.
7. Do not forcefully squeeze the device or place shields above or on its back to avoid damage to the device.
8. Do not drop, knock or strongly vibrate the device to cause damage to the internal circuit board.
9. Do not attempt to disassemble the device without permission; if there is any problem, please contact the after-sales service.
10. Do not repair any products by yourself; if the equipment or any parts are not working properly, you should consult the after-sales service or return to the factory for repair.
11. The equipment must not be exposed to water droplets or splashes, and objects filled with liquids such as vases should not be placed on the equipment.

2 Projector

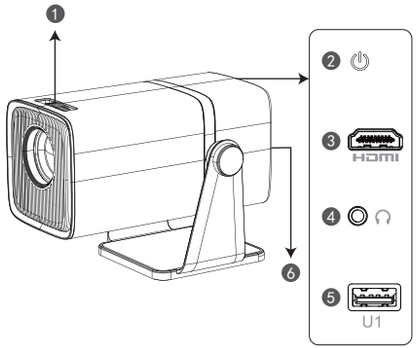

Note: The appearance of the product is subject to the actual product. This picture is for reference only.

1. Manual focus
2. Power button
3. HD input
4. Headphone output
5. Multimedia Input
6. Power input (110-240v~)

3 Remote control

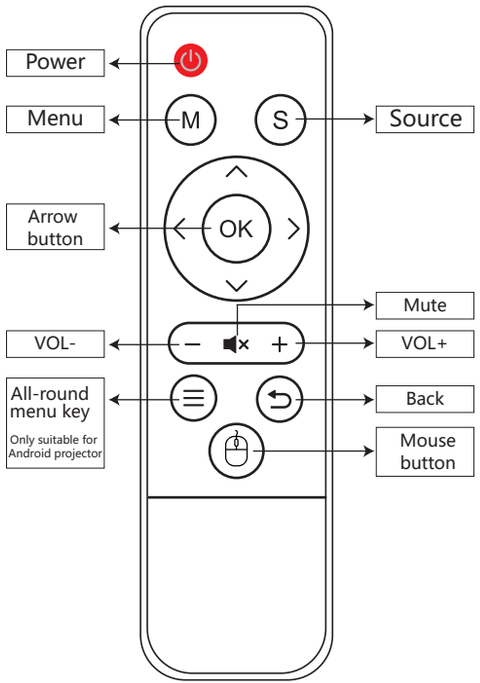

4 Device on/off

Step 1: Take out the machine from the packing box, remove the packing bag and lens cover, place the projector on a basic level table, plug in the matching power cord, and then connect to the AC power supply. At this time, the indicator light on the projector panel is Standby red.

Step 2: Press the on-off button "⏻" on the body or the on-off button "⏻" on the remote control to start the projector. At this time, the indicator light on the projector panel turns solid blue and the lens emits light, and the projector is started.

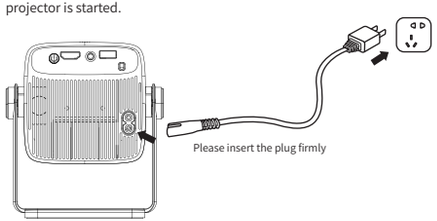

Image adjustment

Please follow the below steps to correct:

1. Adjust the image size to get the best image size

Settings ▶ Projector Setting ▶ Scale

2. Rotate the Focus the dial to get the best focus

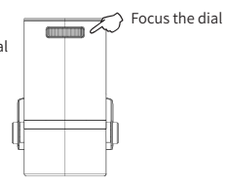

3. Use the keystone function (auto keystone& Four Point Corr) of the projector to get a rectangle projection screen.

Settings ▶ Projector Setting ▶ auto keystone
Four Point Corr

GLOBAL PROJECTION

Ver: 950S(Rev.0)

FCC Warning

This device complies with part 15 of the FCC rules. Operation is subject to the following two conditions: (1) this device may not cause harmful interference, and (2) this device must accept any inte rference received, including interference that may cause undesired operation.

Changes or modifications not expressly approved by the party responsible for compliance could void the user's authority to operate the equipment.

NOTE: This equipment has been tested and found to comply with the limits for a Class B digital device, pursuant to part 15 of the FCC Rules. These limits are designed to provide reasonable protection against harmful interference in a residential installation. This equipment generates uses and can radiate radio frequency energy and, if not installed and used in accordance with the instructions, may cause harmful interference to radio communications. However, there is no guarantee that interference will not occur in a particular installation. If this equipment does cause harmful interferenceto radio or television reception, which can be determined by turning the equipment off and on, the user is encouraged to try to correct the interference by one or more of the following measures:

-Reorient or relocate the receiving antenna.

•Increase the separation between the equipment and receiver.

•Connect the equipment into an outlet on a circuit different from that to which the receiver is connected.

•Consult the dealer or an experienced radio/TV technician for help.

Radiation Exposure Statement

This equipment complies with FCC radiation exposure limits set forth for an uncontrolled environment. This equipment should be installed and operated with minimum distance 20cm between the radiator and your body.