INSMY

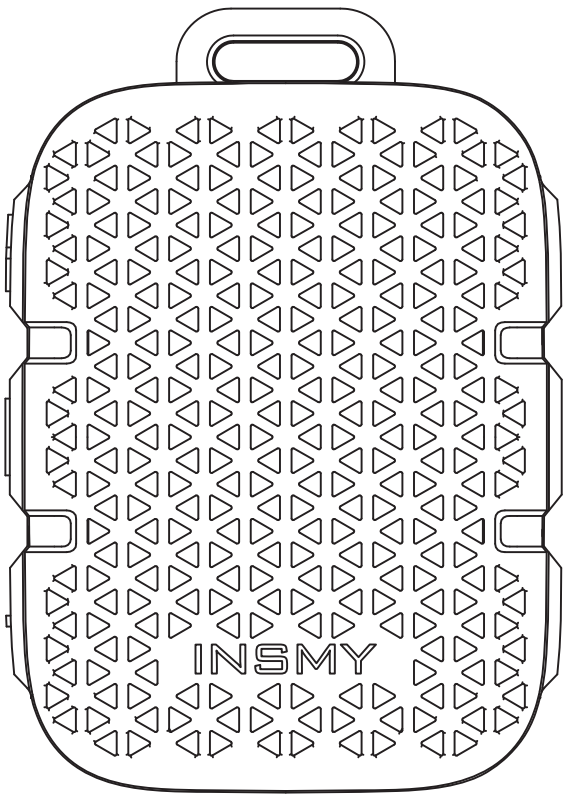

clip on speaker

Quick User Guide

Please read this instruction carefully before using the product and keep it properly

Model name:Clip-S

Button Functions

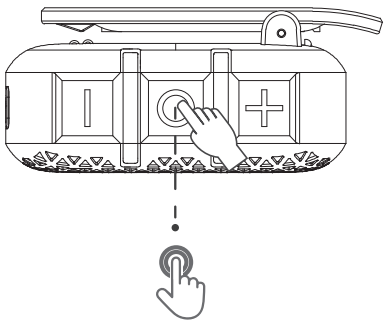

Hold on 2s / Hold on 4s

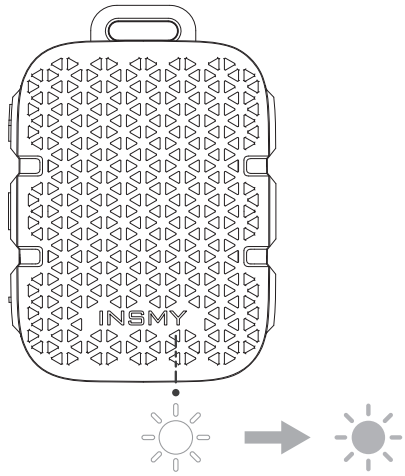

Power On / Power Off

Auto off: No connection for 10 minutes.
Auto disconnect: No music playing for 30 minutes after wireless connected

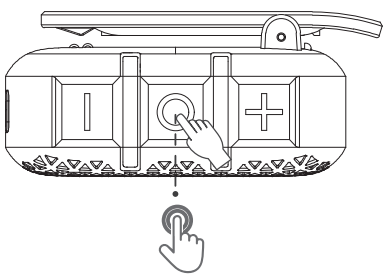

Press for 2s turn on enter pairing mode

≤10m (Free space)

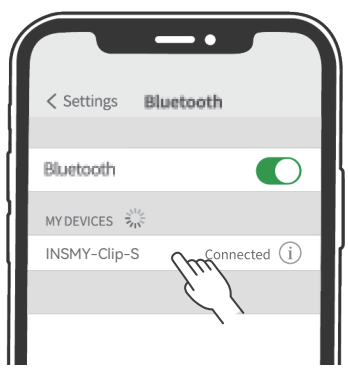

When the connection is successful, the white indicator light is on; when playing music, the white indicator light is off; when disconnected, the white indicator light flashes.

Button Functions

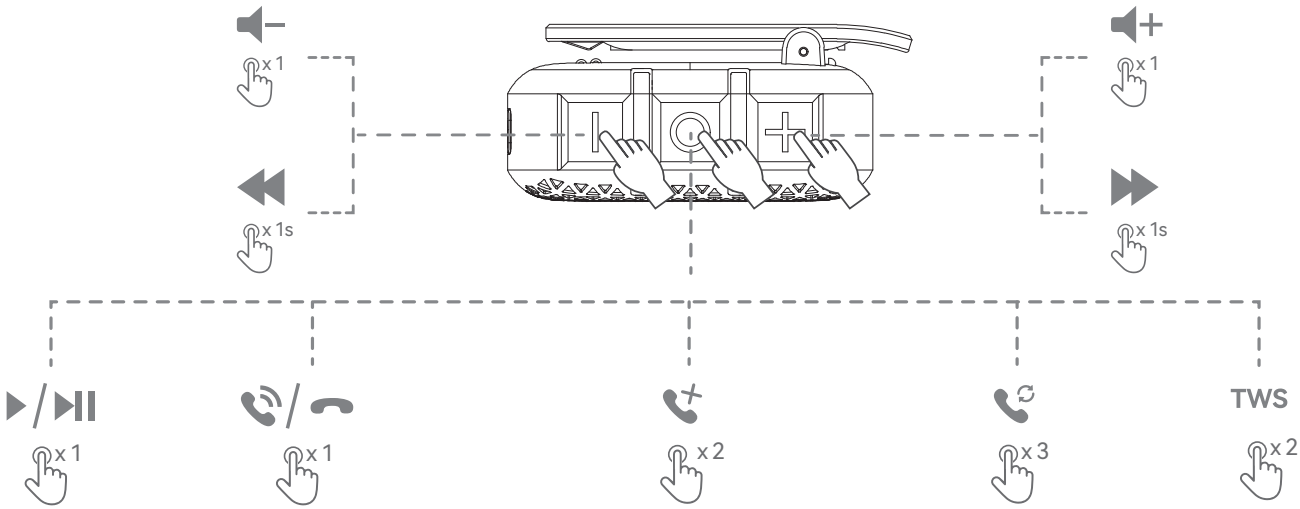

How do I activate stereo pairing mode?

1. Turn on both speakers and the indicator light will flash.
2. Double-tap the power button on either speaker.
3. A tone sounds and the indicator light stops flashing.
4. Turn on your Bluetooth device and search for INSMY CLIP S.

Please note that double-tapping the power button will disconnect the pairing.

Restore Factory Settings

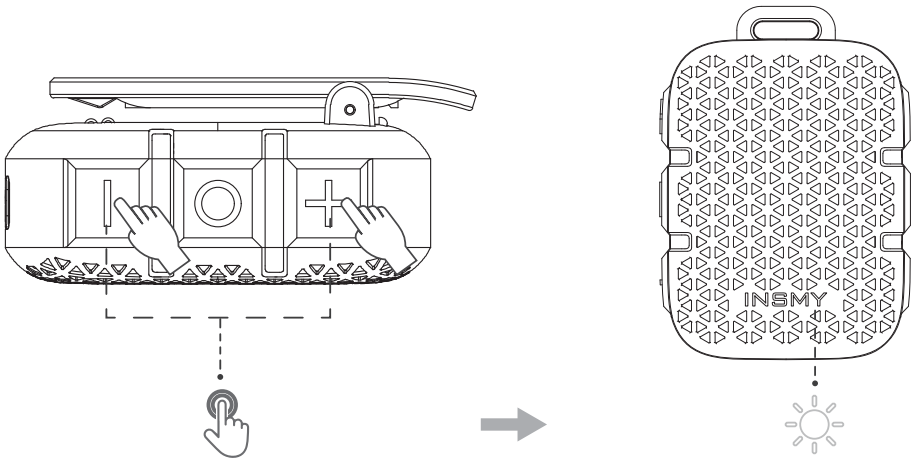

Hold on 5s

Reset Successfully:
White light stay on for 2s

Power the speaker off and on again to start the new pair.

* You might need to reset the INSMY-Clip-S if it's not in correct connection with your devices.
* After reseting, delete the paired "INSMY-Clip-S" from your device and re-pairing it.

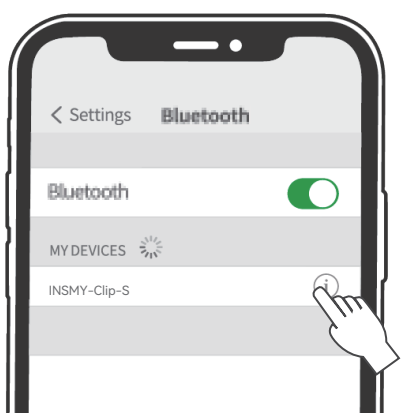

Forget this device

Charging Instructions

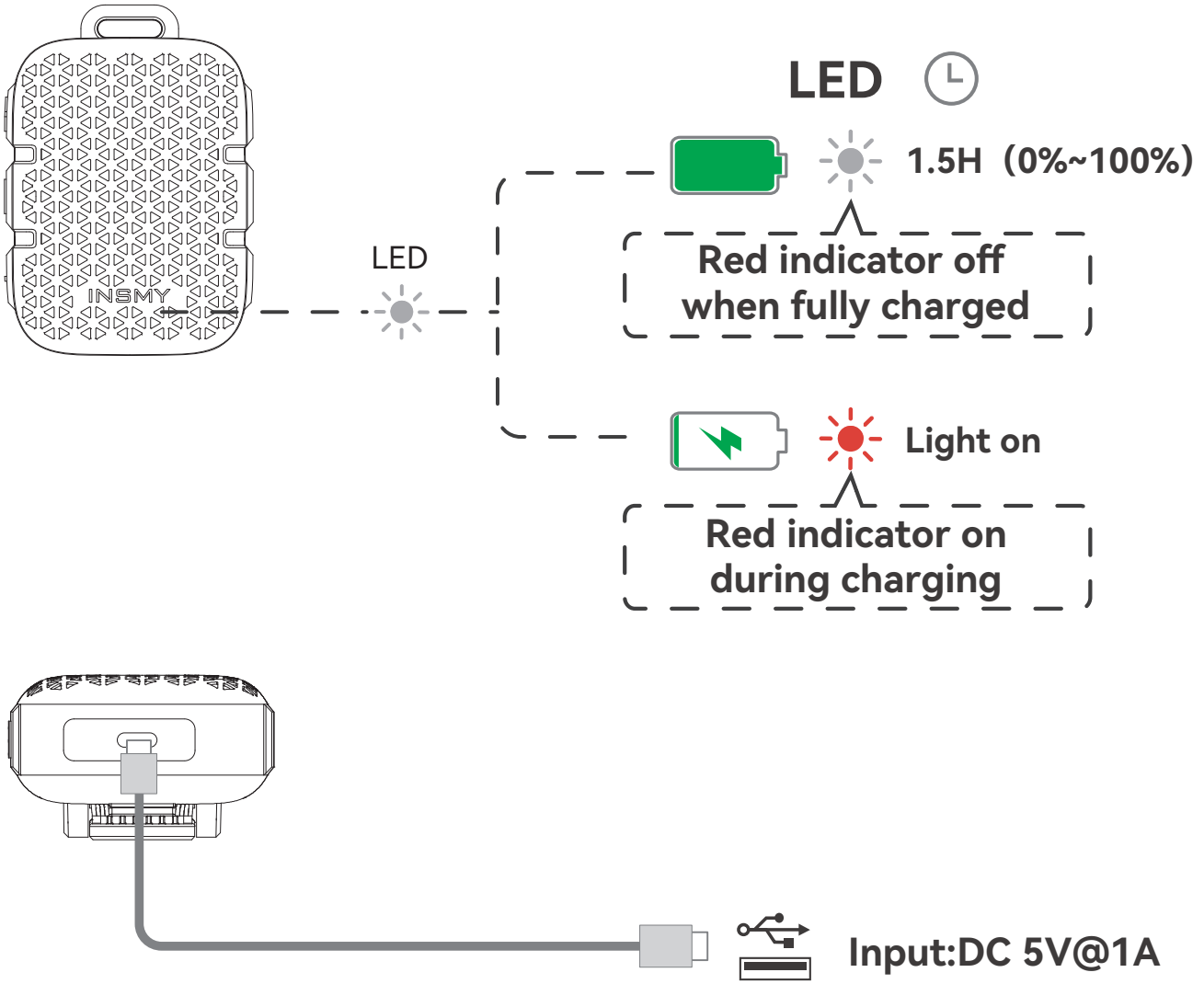

FCC Warning

This device complies with part 15 of the FCC Rules. Operation is subject to the following two conditions:(1) This device may not cause harmful interference, and (2) this device must accept any interference received, including interference that may cause undesired operation.

Any Changes or modifications not expressly approved by the party responsible for compliance could void the user's authority to operate the equipment.

This equipment has been tested and found to comply with the limits for a Class B digital device, pursuant to part 15 of the FCC Rules. These limits are designed to provide reasonable protection against harmful interference in a residential installation. This equipment generates uses and can radiate radio frequency energy and, if not installed and used in accordance with the instructions, may cause harmful interference to radio communications. However, there is no guarantee that interference will not occur in a particular installation. If this equipment does cause harmful interference to radio or television reception, which can be determined by turning the equipment off and on, the user is encouraged to try to correct the interference by one or more of the following measures:

- Reorient or relocate the receiving antenna.
- Increase the separation between the equipment and receiver.
- Connect the equipment into an outlet on a circuit different from that to which the receiver is connected.
- Consult the dealer or an experienced radio/TV technician for help.

The device has been evaluated to meet general RF exposure requirement. The device can be used in portable exposure condition without restriction.

Customer Support

To Our Valued Customer,

Thank you for your purchase. If there is any quality issue of the speaker, please feel free to contact us on Amazon message service or our Email service@insmy.com . We will follow up within 24 hours.

Sincerely,
INSMY

FCC ID: 2BA4Q-CLIP-S Made in China