深圳信诺山通信技术有限公司

Shenzhen Signalsen Telecom Technology Co，.Ltd

WIFI Antenna specification sheet

Material No：W574-1B300B-A

Address: No.211, Hengbo Innovation and Technology Industrial Park, Qingji Road, Longhua Street, Longhua District, Shenzhen, Guangdong, China

contents

contents 2

1. PROJECT INFORMATION AND ELECTRICAL SPECIFICATION 3

1-1 Project picture 3

1-2 Frequency Band: 3

1-3 Impedance matching 3

2. VSWR 3

2-1 Measuring Method: 3

2-2 S11 parameter values 4

3. EFFICIENCY AND GAIN 4

3-1 Efficiency/Gain- WIFI 5

4. THE PRODUCTION INDEX 9

5. STRUCTURAL DRAWINGS ..... ERROR! BOOKMARK NOT DEFINED.

1. Project information and Electrical Specification

Those specifications were specially defined for 2.4G/5G model, and all characteristics were measured under the model's handset testing jig .

1-1Antenna picture

Size: 4.7*0.8CM

1-2 Frequency Band:

Frequency Band	MHz
2.4G/5G	2400-2500/4950-5850

1-3 Impedance matching

Antenna original matching

2.VSWR

2-1 Measuring Method:

1. A 50 Ωcoaxial cable is connected to the antenna. Then this cable is connected to a network analyzer to measure the VSWR,

2. Keeping this jig away from metal at least 20cm.

The test schematic is as follows:

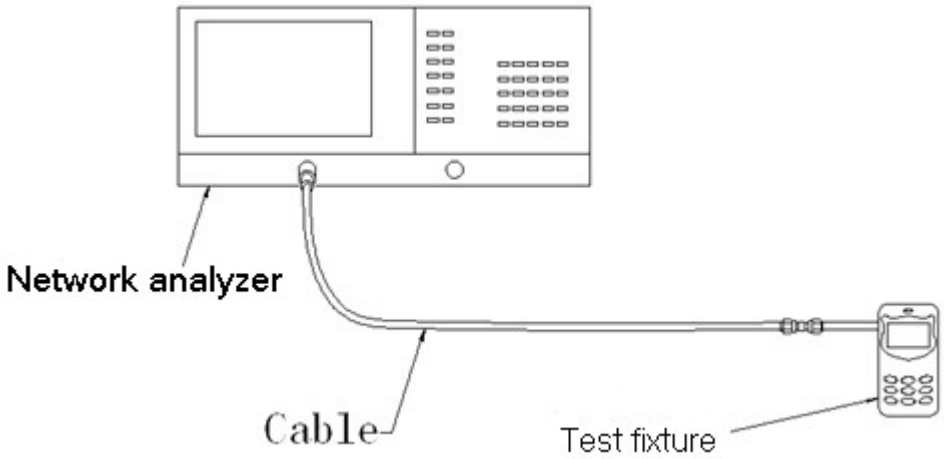

2-2 S11 parameter values

Frequency（MHZ）	2400	2500	4950	5400	5850
Standing wave	1.3	1.2	1.78	1.63	1.23

3. Efficiency and Gain

***measuring and test instruments:**

Microwave darkroom, Agilent network analyzer, Agilent spectrum analyzer, 8960 comprehensive tester, standard antenna

***test method:**

Equipment Fix the H-plane at the center position of the turntable, on the same horizontal line as the center position of the horn antenna。

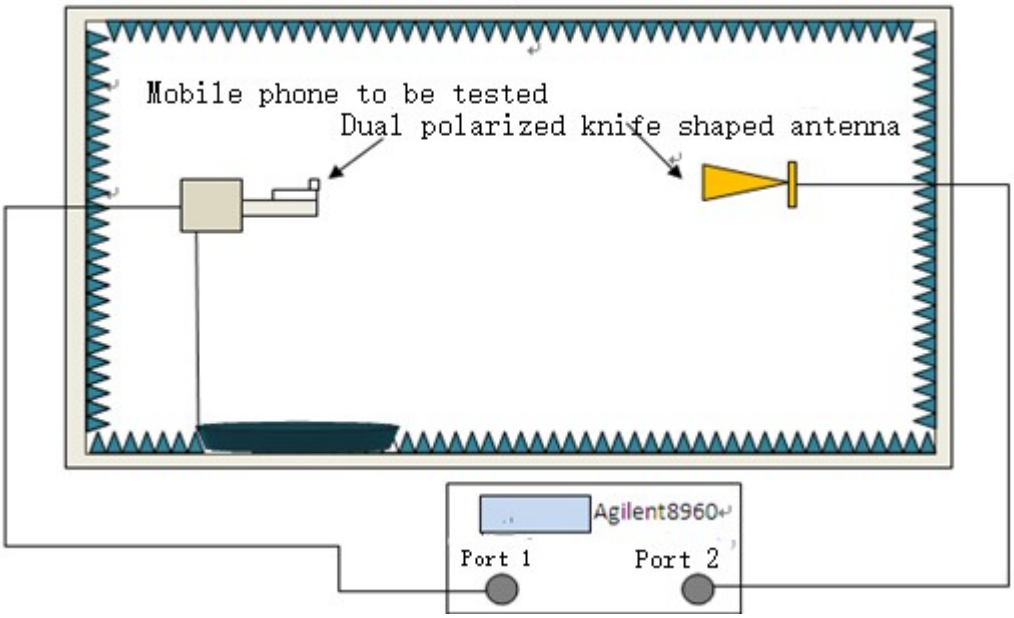

3-1 Efficiency/Gain- WIFI

Passive Test For WIFI_BT								
Freq (MHz)	Effi (%%)	Effi (dB)	Gain (dBi)	Gain (dBd)	Max (dB)	Min (dB)	Attenut Hor	Attenut Ver
2400	64.61	-1.9	2.62	0.47	2.62	-14.89	51.03	51.21
2450	59.76	-2.24	2.47	0.32	2.47	-13.7	51.78	51.74
2500	53.62	-2.71	2.2	0.05	2.2	-10.59	51.76	51.66

Passive Test For 5.8								
Freq (MHz)	Effi (%%)	Effi (dB)	Gain (dBi)	Gain (dBd)	Max (dB)	Min (dB)	Attenut Hor	Attenut Ver
4950	53.52	-2.71	2.33	0.18	2.33	-16.16	62.44	62.5
5400	66.72	-1.76	4.64	2.49	4.64	-19.6	63.55	63.99
5850	64.22	-1.92	3.44	1.29	3.44	-11.42	66.35	66.32

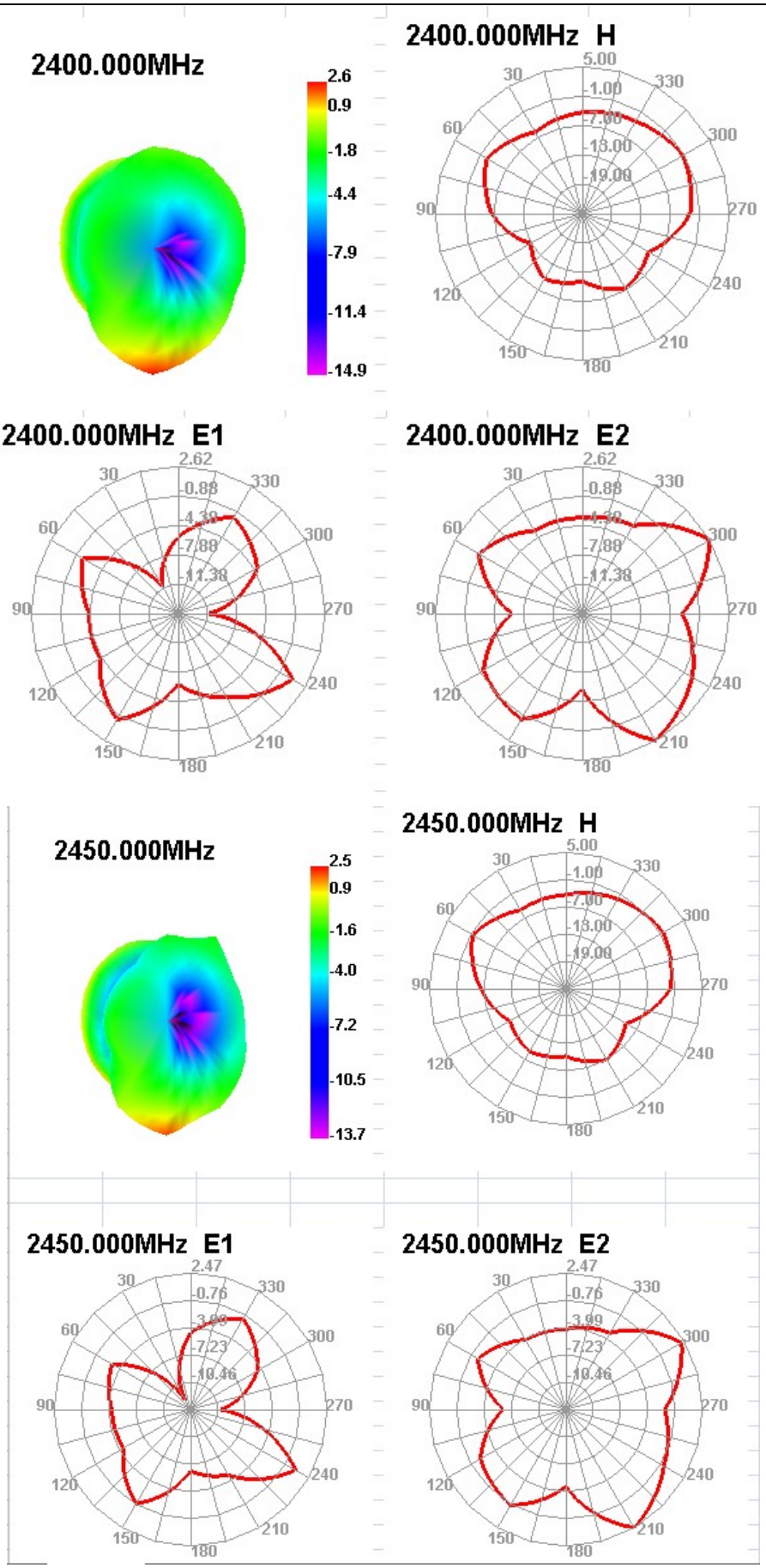
2400.000MHz
2.6
0.9
-1.8
-4.4
-7.9
-11.4
-14.9
2400.000MHz H
2400.000MHz E1
2400.000MHz E2
2450.000MHz
2.5
0.9
-1.6
-4.0
-7.2
-10.5
-13.7
2450.000MHz H
2450.000MHz E1
2450.000MHz E2

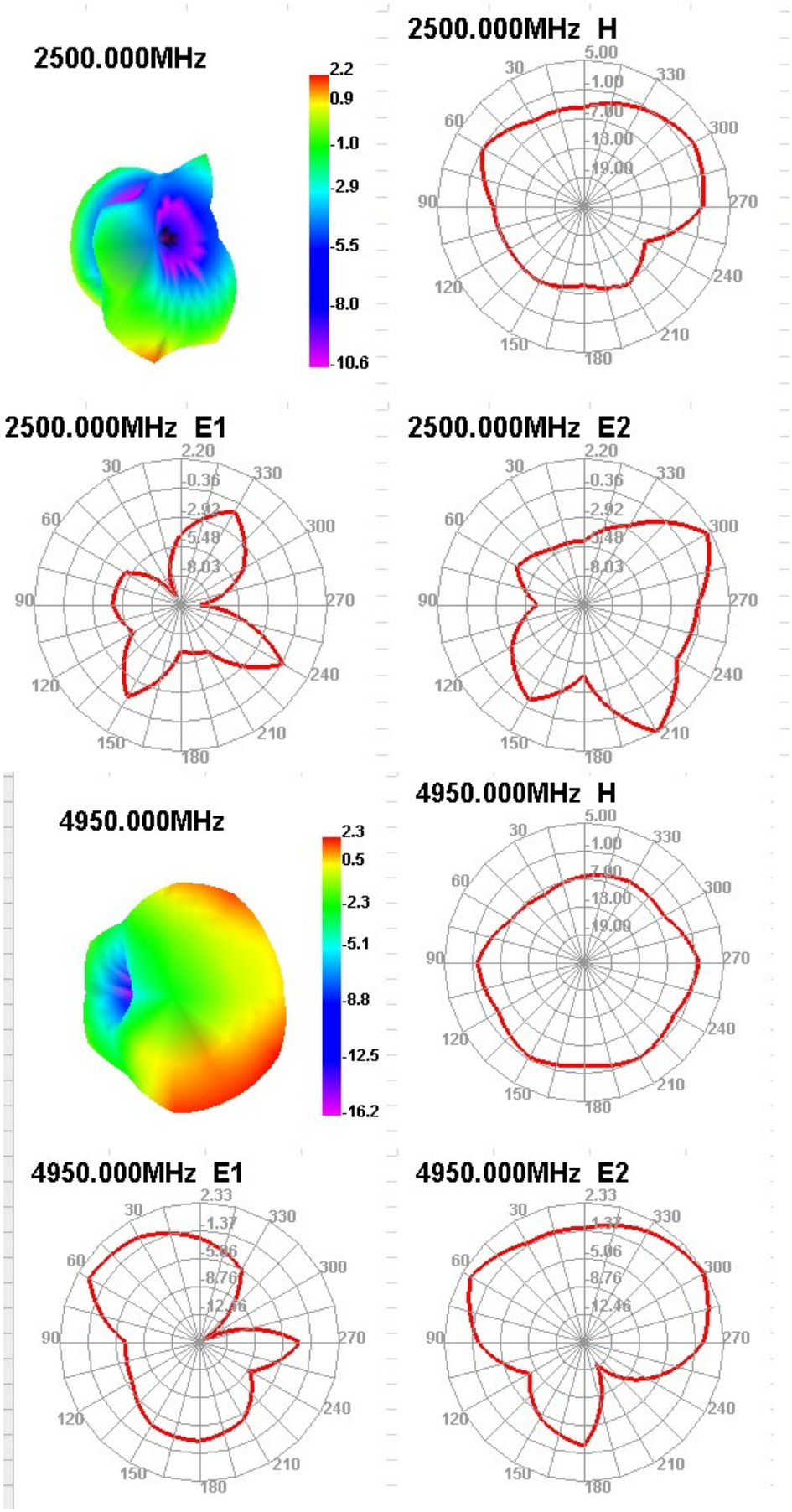
2500.000MHz
2.2
0.9
-1.0
-2.9
-5.5
-8.0
-10.6
2500.000MHz H
2500.000MHz E1
2500.000MHz E2
4950.000MHz
2.3
0.5
-2.3
-5.1
-8.8
-12.5
-16.2
4950.000MHz H
4950.000MHz E1
4950.000MHz E2

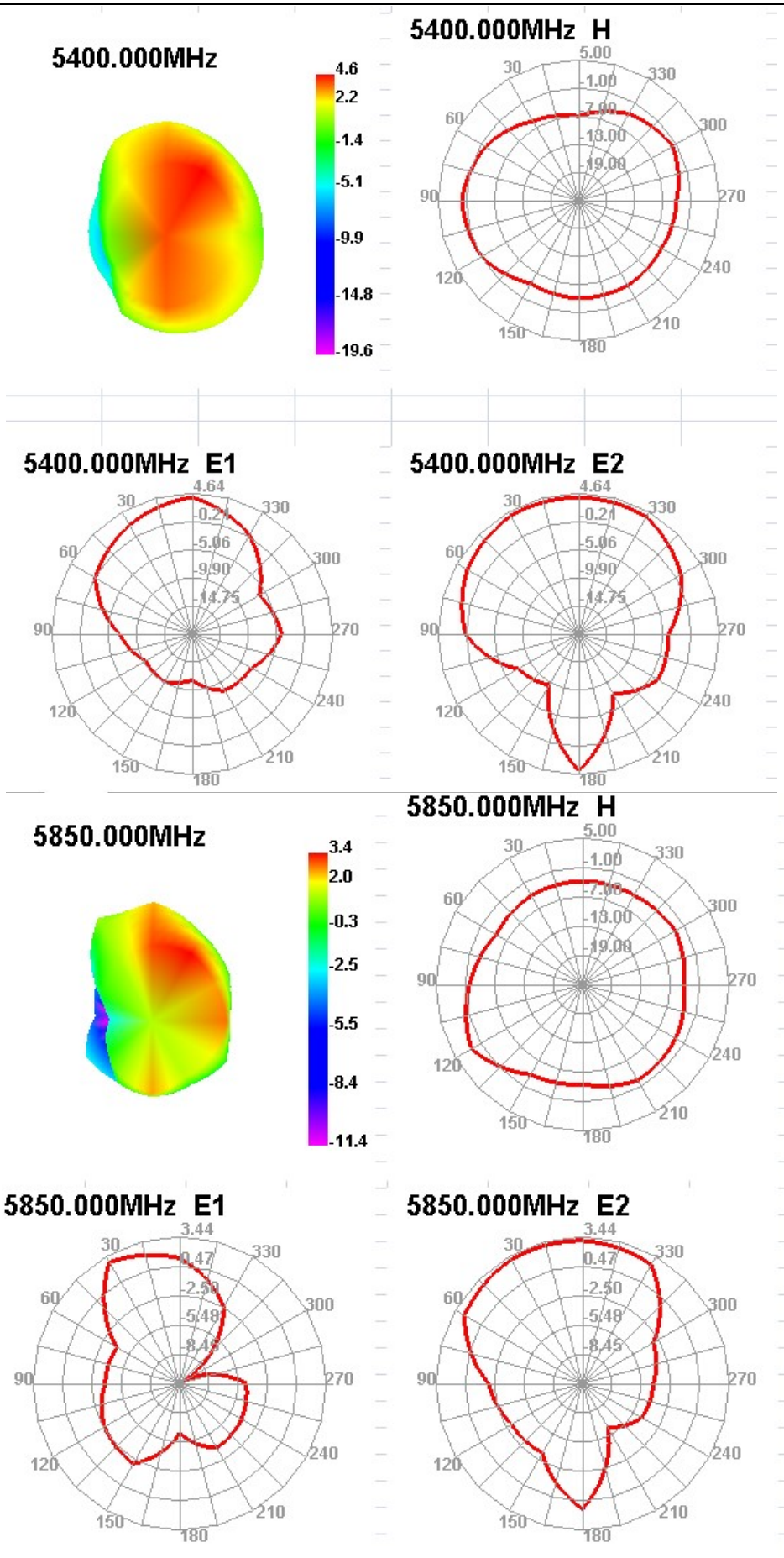
5400.000MHz
4.6
2.2
-1.4
-5.1
-9.9
-14.8
-19.6
5400.000MHz H
5400.000MHz E1
5400.000MHz E2
5850.000MHz
3.4
2.0
-0.3
-2.5
-5.5
-8.4
-11.4
5850.000MHz H
5850.000MHz E1
5850.000MHz E2

4. The production index

When producing antennas, the standing wave ratio is used as the production testing standard. Based on the differences in the project itself, the following standards are provided:

frequency	Mass production standards
WIFI (2400-2500Mhz/4950-5850MHZ)	VSWR（Mass production standards） <VSWR(Design samples)+0.5