Recognition book

SPECIFICATION FOR APPROVAL

Name: WIFI/BT 2.4 Antenna

Model: TYY-TX2506G-3

Manufacturer: Shenzhen jinhaotai electronics co. LTD

Company stamp: 4.017.0000042

Adress: Room 1302, East Tower, Coast Times Apartment, Southeast Corner of Shennan Avenue and Qianhai Road, Nantou Sub-district, Nanshan District, Shenzhen City

drawing			Customer approve
MADE	CHECKED	APPROVED	
QIU	**jack**	**Miketang**	
DATE: 2023.06.02			DATE

1、Specifications

The report provides a test of the electrical performance parameters of the **TYY-TX2506G-3**Technical parameters of antenna electrical appliances antenna, which is a science and technology model.TYY-TX2506G-3 WIFI Built in antenna,WIFIAntenna is made bycopper pipe+RF Line composition。（As follows 1 Shown）

Electrical technical parameters			
电 性 能 指 标		Electrical Specifications	
频率范围	2.4-2.5GHZ	Frequency Range	2.4-2.5GHZ
电压驻波比	≤2.0	VSWR	≤2.0
增益	2.88dBi	GAIN	2.88dBi
输入阻抗	50 Ω	Input Impedance	50 Ω
机 械 指 标		Mechanical Specifications	
天线颜色	黑色	Antenna Color	BLACK
接口形式	IPEX-1	Input connector	IPEX-1
线长度	60mm	Cable length	60mm
工作温度	-40℃~+85℃	Working Temperature	-40℃~+85℃
工作湿度	20~80%	Working Humidity	20~80%

Chart 1 TYY-TX2506G-3 Product size

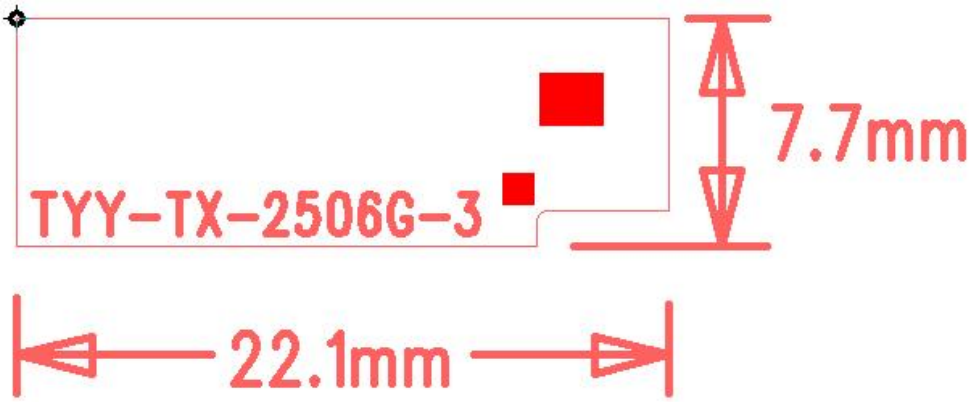

Chart 2 TYY-TX2506G-3 Antenna finished

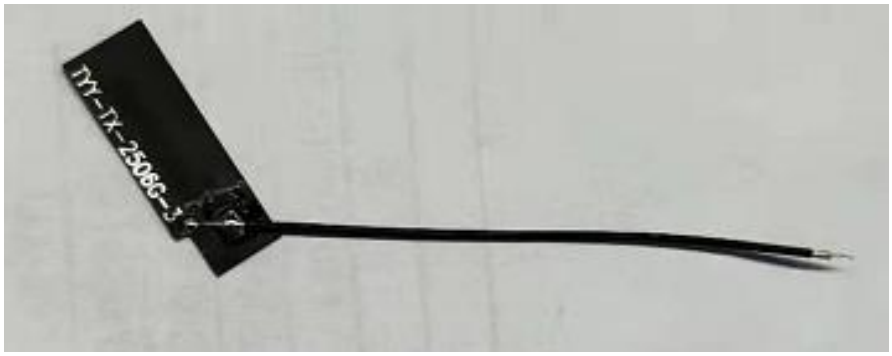

Line length 60+/-2mm。

Chart 3 Location of antenna patch

Matters needing attention: WIFI antenna behind the tear tape on the back glue stick flat side, away from the screen on the back of the metal, away from the loudspeaker hardware, if the antenna near the metal lead to WIFI signal frequency deviation, make the antenna standing wave ratio and power and efficiency will become poor, and the signal will become worse, the frequency shift signal variation can also cause interference, so must be in accordance with our marking the location of the antenna, thank you!

2. Electrical properties

2.1WIFI Antenna matching circuit

This item matching circuit is provided by the customer。

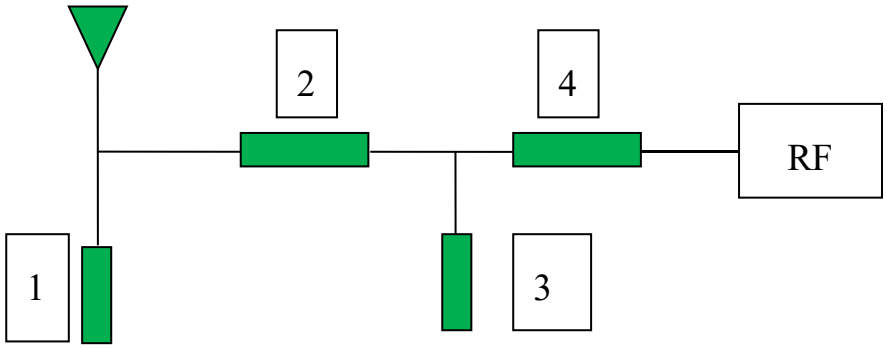

Element number	1	2	3	4
WIFI optimum	NC	0 ohm	NC	
Original (spare)	50 ohm matching (inductance capacitance / sunlord Darfon)			

Chart 4 OTA Microwave dark room

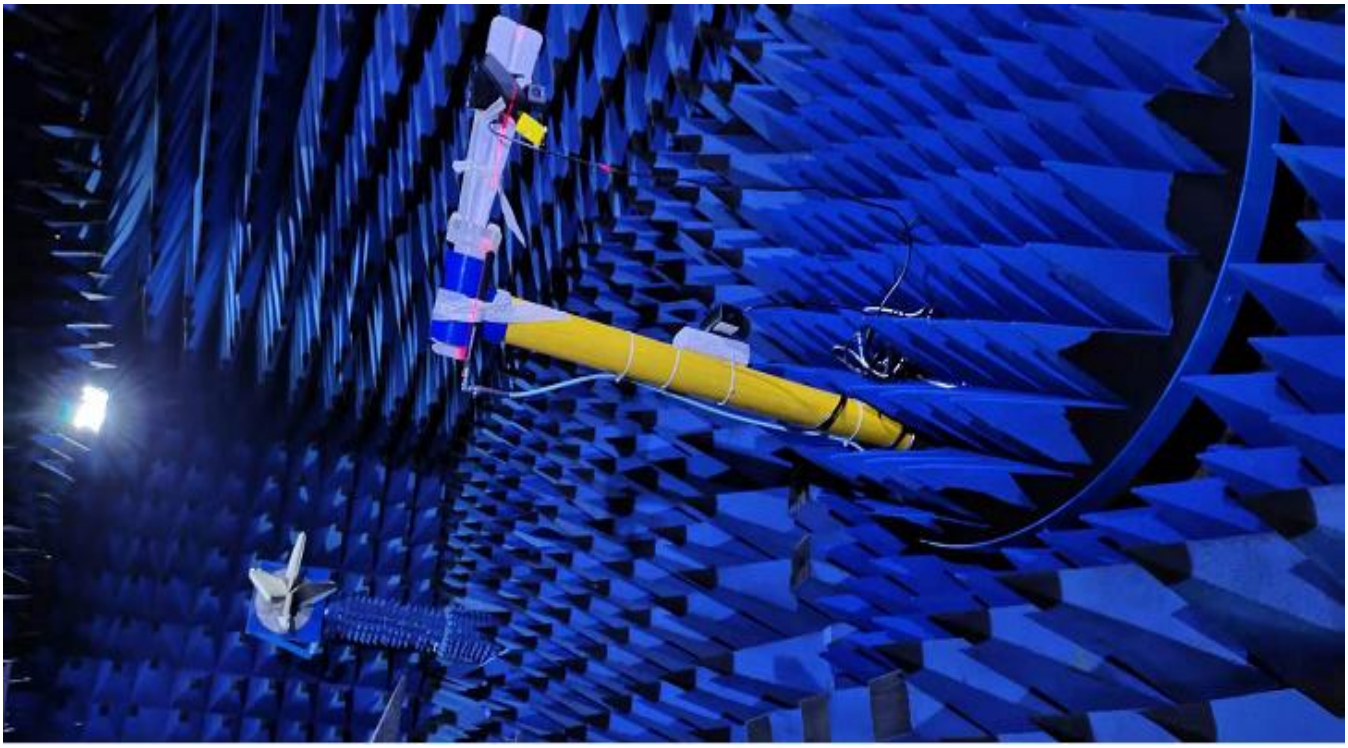

Chart 5 Test environment: OTA743 darkroom, W500/8960/8753ES /5071C, the machine is placed with its back to the turntable 4 meters away from the standard horn

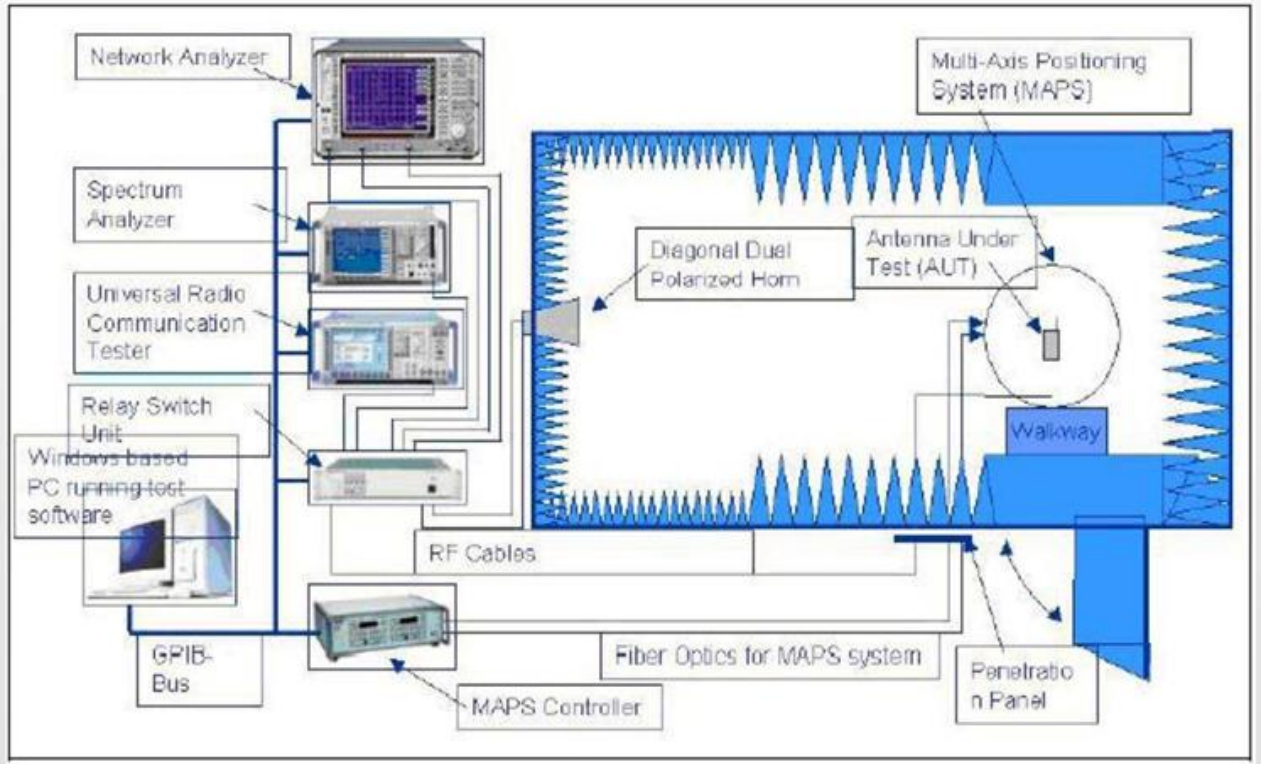

2.3 Bobbi (VSWR) test

2.3.1. Test setup

Connect the VSWR test device are: Agilent E5071B network analyzer from 50 ohm coaxial Cable 120mm long

Brass & test fixture

Processing test fixture: 50 ohm antenna leads to SMA-J connector from the test point on the plate PCB with a rigid cable, and a

Connect the choke tube, and then sequentially connected with other devices.

WIFI In Bobbi

Chart 6 Return loss

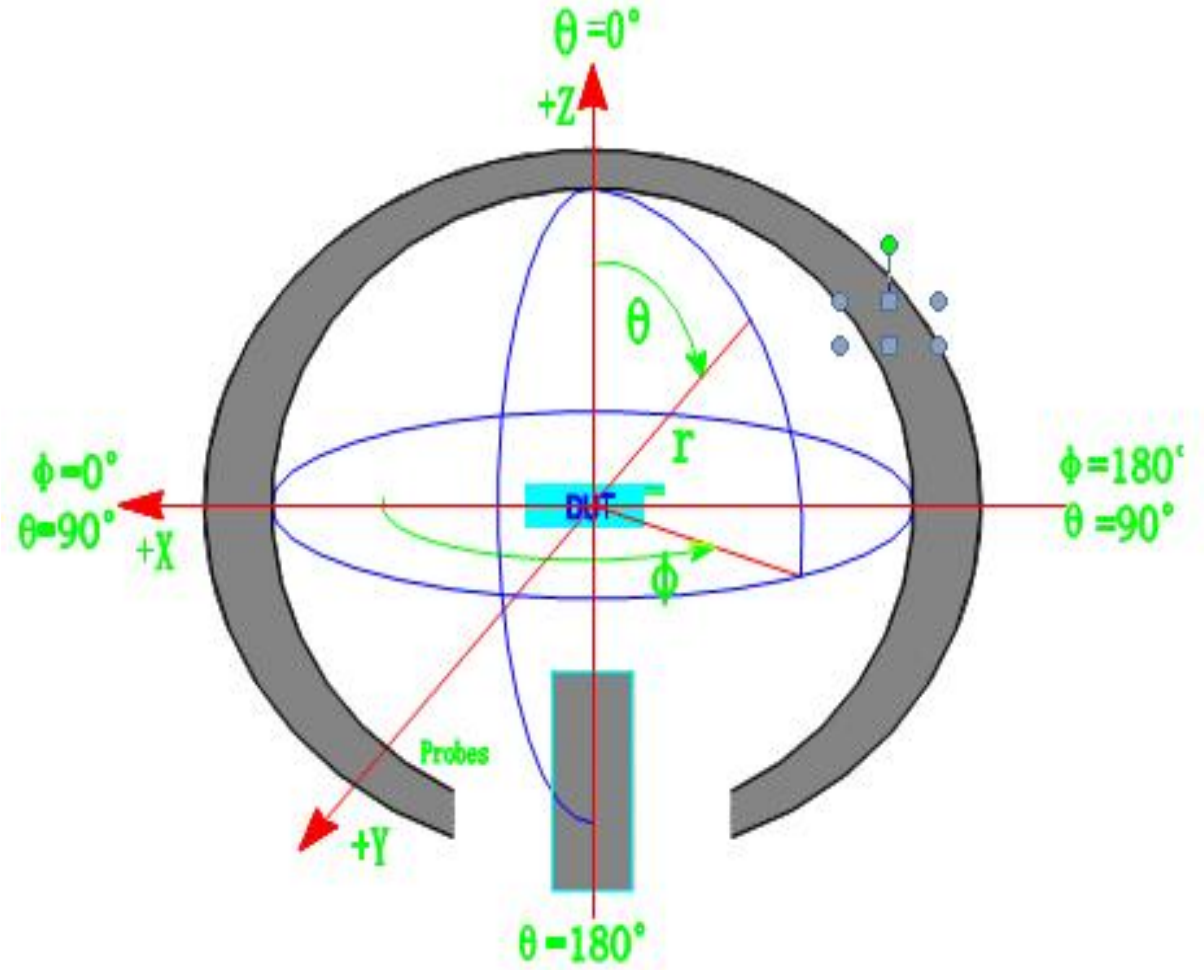

4. 3D dynamic test of the whole machine

4.1 Test site

TCT microwave anechoic chamber: the test frequency range is 800mhZ-6ghz, the quiet zone range is 50cm circle, and the reflectivity is less than -90 dB.

Chart 7 Agilent E5071C network analyzer

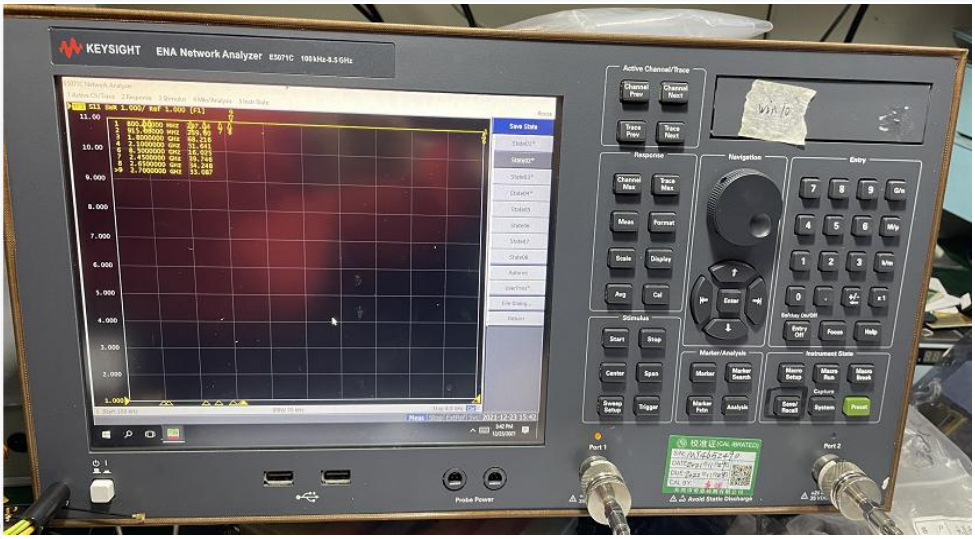

ratio

Chart 8 WIFI VSWR

standard	Low frequency		High frequency		
frequency (MHz)	2412	2442	5700	5800	
VSWR	1.4	1.1	1.4	1.9	

Chart 9 Elevation map coverage

FEITUKEJI											
Frequency ID	**1**	**2**	**3**	**4**	**5**	**6**	**7**	**8**	**9**	**10**	**11**
Frequency (MHz)	**2400.0**	**2410.0**	**2420.0**	**2430.0**	**2440.0**	**2450.0**	**2460.0**	**2470.0**	**2480.0**	**2490.0**	**2500.0**
Efficiency (dBi)	**-2.80**	**-2.82**	**-2.70**	**-2.24**	**-2.10**	**-2.57**	**-2.15**	**-2.12**	**-1.92**	**-2.71**	**-3.14**
Gain (dBi)	1.92	1.71	1.89	2.73	2.80	2.29	2.85	2.88	2.64	1.72	1.47
Efficiency (%)	**52.43**	**52.24**	**53.74**	**59.72**	**61.65**	**55.33**	**60.93**	**61.44**	**64.27**	**53.54**	**48.48**
Directivity (dB)	4.43	4.53	4.59	4.97	4.90	4.86	5.00	4.75	4.56	4.43	4.61
Peak Gain Position (Theta)	73.00	72.00	75.00	88.00	91.00	90.00	108.00	76.00	77.00	77.00	77.00
Peak Gain Position (Phi)	90.00	90.00	90.00	90.00	90.00	90.00	90.00	90.00	90.00	90.00	90.00
Efficiency ThetaPol (%)	13.38	13.13	13.89	15.52	16.48	15.25	16.40	16.45	17.38	14.53	13.14
Efficiency PhiPol (%)	39.04	39.11	39.84	44.20	45.17	40.08	44.54	44.99	46.88	39.01	35.34
Upper Hem. Efficiency (%)	34.87	34.39	35.05	38.85	40.02	35.60	38.62	38.70	40.51	33.83	30.39
Lower Hem. Efficiency (%)	17.56	17.85	18.68	20.87	21.63	19.73	22.31	22.74	23.75	19.71	18.09

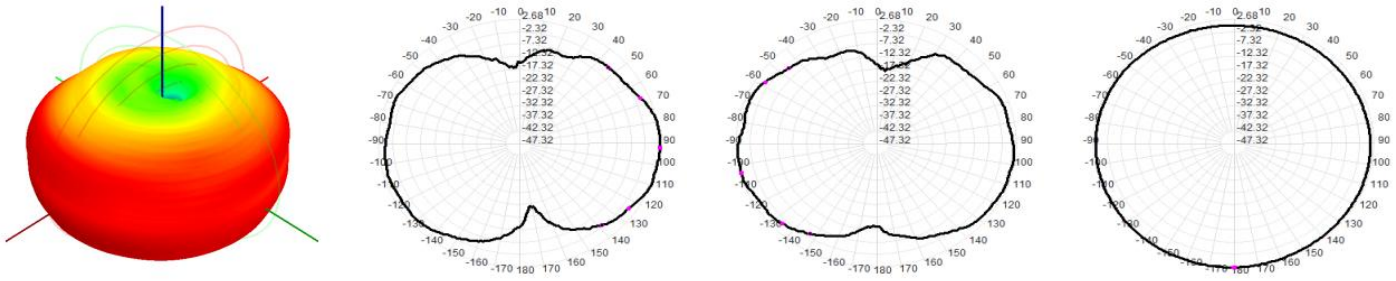

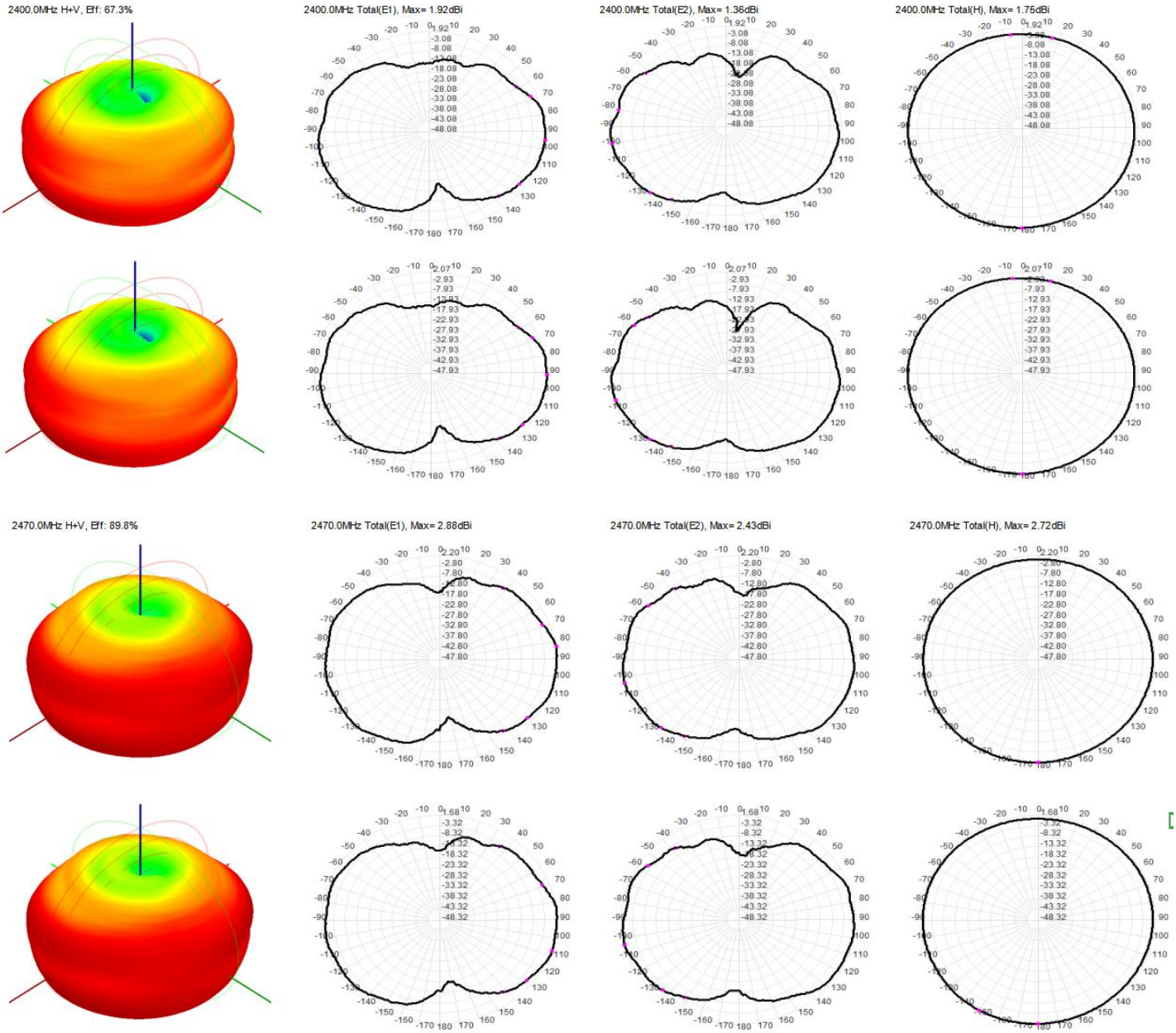

3, recommendations and conclusions

This report is based on the antenna electrical performance measured by the customer based on the final version of the model project of Hangzhou Rongmeng Intelligent Technology Co., LTD.

As can be seen from the above test data, the antenna provides good electrical performance.

Tianyiyuan is looking forward to your confirmation. Thank you for your cooperation!