SPECIFICATION

CUSTOMER: **Shenzhen Keshi Technology Co., Ltd**

SUPPLIER: Shenzhen Zhaohe Communication Technology Co., Ltd

DESCRIPTION: 3DB Dual-band Wifi Antenna

MATERIAL CODE:

SUPPLIER PRODUCT NAME:3DB Dual-band Wifi Antenna

SUPPLIER MATERIAL CODE: C100-0086

DATE: 2023.6.6

SUPPLIER		
PREPARED BY	**CHECKED BY**	**APPROVED BY**
liu zhuo	Lin weidong	Lin weidong

CUSTOMER		
ACCEPTED BY	**CHECKED BY**	**APPROVED BY**

REMARK: Please send us one or copy of this approval with stamp after accepting,other copies filed by the customer.

ADD:2nd Floor, Building 6, No. 25 Longxi Wulian Road, Longgang District, Shenzhen

Postal code:
Tel:0755-32971376 Fax:0755-33298253
Http:

REVISION HISTORY

REVISION	DESCRIPTION	DATE
V1	NEW	2023.6.6

CONTENT

1.**Cover**.....1

2.**Change History**.....2

3.**Directory**.....3

4.**Product parameters**.....4

5.**Engineering drawing**.....5

6.Test report.....6

7.**Test detection**.....7

8.Mechanical Test Report 8

9.Packaging instruction report 9

4. Product parameters

Table 1			
NO	DESCRIPTION	VALUE	Laboratory allowable additional errors
4.1.1	Frequency range	**2.4G-2.5G/5G-5.8G**	——
4.1.2	V.S.W.R	Compare to the sample	——
4.1.3	Radiation	Omni-directional	——
4.1.4	Radiating element	**1/4 Ware Helical**	——
4.1.5	Polarization	**Linear Vertical**	——
4.1.6	Admitted power	**1W**	——
4.1.7	Connector	**SMA**	——

5. Engineering drawing

RoHS Compliant

版本 REV	状態 STATUS	日 期 DATE	說 明 DESCRIPTION	ECN NO.	NAME
01	样品	2019.5.22	新订图面		Alan

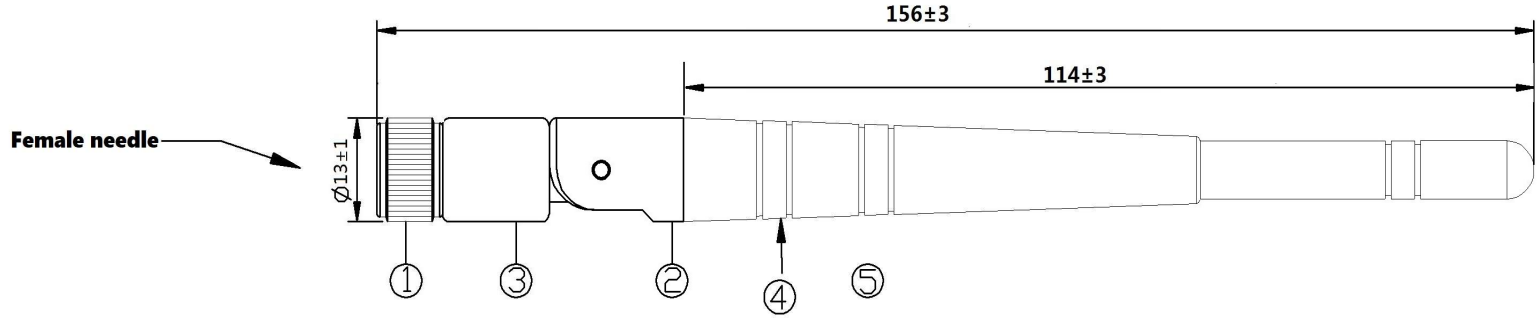

Frequency Range	2400-2500/5150-5850MHz
Gain	2dBi
VSWR	Compare to the sample
Polarzation	Linear
Impedance	50Ω

NO.	ITEM	DESCRIPTION	QTY
⑧	8100-0005	1.78-64	
⑦	6100-0004	L23*OD4.5*OD1.0	
⑥	6100-0003	L22*OD4.5*OD1.65	1
⑤	3300-0011	OD:4.5mm L:18MM	1
④	8200-0013	L113*OD13 -TPEE	1
③	8200-0012	L25.3*OD13 -PC/PBT	1
②	8200-0011	L28.2*OD13 -PC/ABS	1
①	5001-0004	RP-SMA（P）-ST-178-B-S（J）	1

CUST NO.:

PART NO.: A100-0062

TITLE: RP-SMA（P）- 2.4/58GHz-L156mm

DRAWN BY	cham	DRAWING NO.	
CHECKED BY		DRAWING SIZE	1: 1 A4
APPROVED BY		UNIT	MM
SORTING NO.	MHZ.TD	PAGE	1 OF 1

[表单版本-第一版]

6: Test report

S-Parameter test image ：

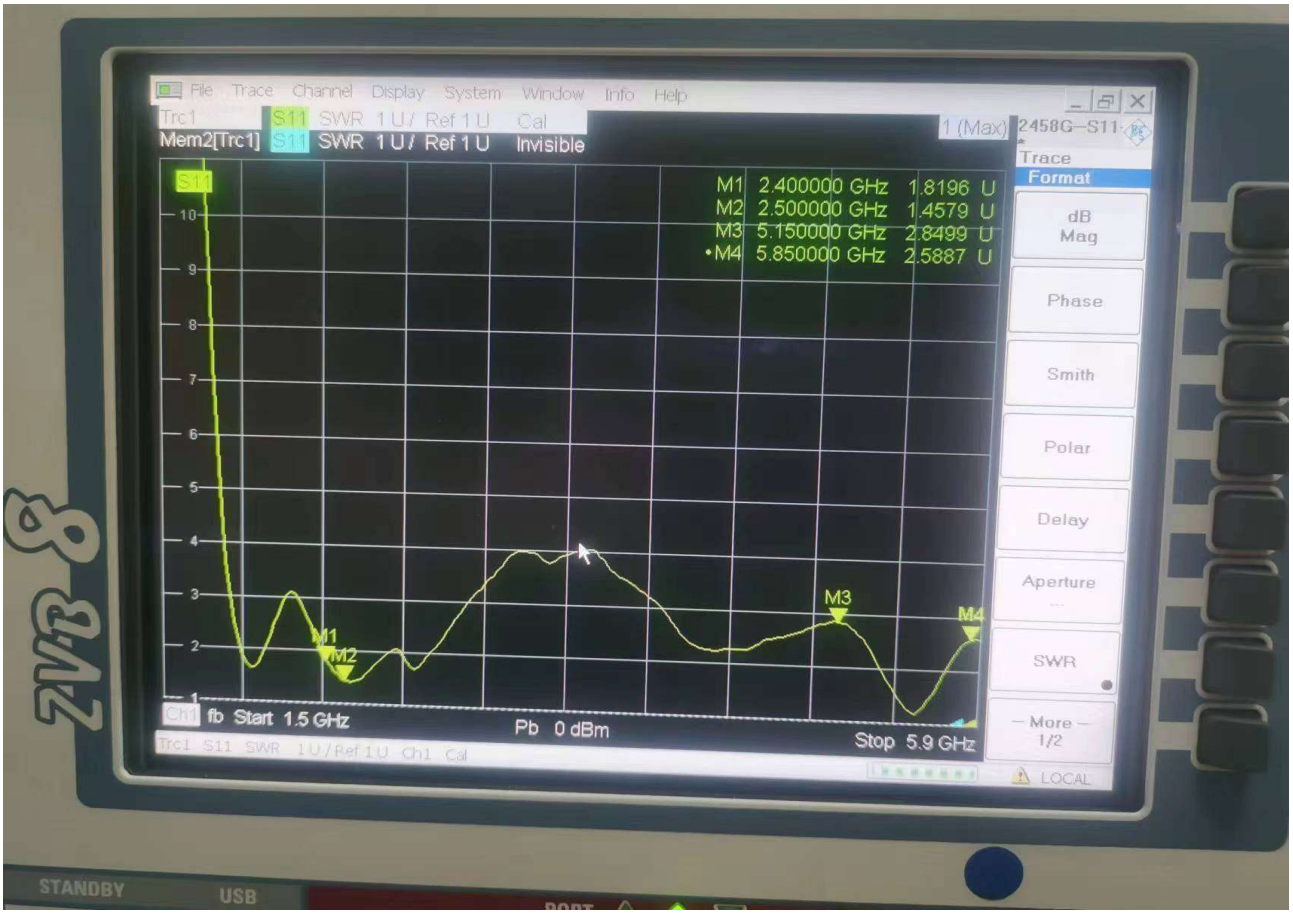

7.Environmental Test Report

No	Test Item	Test Methods and Conditions	Equipment	Test Result
1	Temperature and Humidity Test	Refer to EIA 364-31 Method III，Condition A The purpose of this test procedure is to evaluate the products used in the detailed standard test methods, which are evaluated by the effects of high humidity and heat, affecting the properties of the material. Request: Temperature: 70°C Humidity: 90~95% (R.H)	K.SON INS THS-A4L-150	Pass
2	Low Temperature Test	Refer to Zhaohe's test standard： The measured sample should be placed in a temperature environment with a temperature set to -20°C Request : Time: 24H	K.SON INS THS-A4L-150	Pass
3	High Temperature Test	Refer to Zhaohe's test standard： The measured sample should be placed in a temperature environment with a temperature set to 70°C. Request: Time: 24H	K.SON INS THS-A4L-150	Pass
4	Thermal Shock	Refer to Zhaohe's test standard： The measured sample should be placed in a fixed environment with a temperature set to -20~70°C. Request: More than 8H.(each time 30mins，12 cycles)	K.SON INS THS-A4L-150	Pass
5	Salt Spray Test	Refer to Zhaohe's test standard： The measured sample should be placed in a fixed environment at its request： NaCL concentration：40-60g/1Kg PH value：6.5-7.2 Testing time：24H 1.No rust and peeling on gold plated products. 2.No rust on 2 or more points of other nickle plated, tin plated and galvanized products in the same axis or face.	Salt Spray Tester	Pass

8：Mechanical Test Report

No	Test Item	Test Methods and Conditions	Equipment	Test Result
1	Vibration Test	Condition A The purpose of this test procedure is to evaluate the products used in the detailed standard test methods, which are evaluated by the movement or movement, affecting the performance of the material. Request: Vibration scope：10-55HZ Displacement amplitude：0.35mm Acceleration amplitude：50.0M/S Frequency sweep times：30times	Vibration Tester	Pass
2	Low Temperature Test	Refer to Zhaohe’s test standard： The measured sample should be placed at a certain height, its height is set to 1M, according to the direction of 6 free fall 3 times. Request: After the drop test, the mechanical properties of the product are normal.	Drop Test Fixture	Pass
3	High Temperature Test	Refer to Zhaohe’s test standard： Fixed the object by the jig. Using a certain force to opposite direction after the force, the product assembly can not fall off. Request： 1. Products assembly can not fall off. 2. SMA minimum tension：3KG	Tension Tester	Pass

9.Packaging instruction report

Package by PE bags, Antenna 100PCS/ bag, Feeder line200PCS/ bag;
The carton label shall contain the following information: supplier name, customer material number, material name, RoHS tag, packing quantity, production date.

REMARKS：

1.Product samples provided by the supplier and the amount of material must meet the technical requirements

2.Each page and all the attachments were confirmed need official seal of the supplier

3.Each page not enough to fill out,the supplier can increase on its own

4.Technical specification must be provided prior to trial production, and need to be admitted as the basic condition material approval.

Passive test data recording form

Test sequence number	1#			
EUT model				
remark	240MM			
Frequency	E Total. dB(dBi)	AVG（dBi）	MIN（dBi）	Efficiency( )
2400MHz	2.67	-1.23	-32.70	75%
2410MHz	2.63	-1.26	/	75%
2420MHz	3.06	-1.14	/	77%
2430MHz	3.17	-1.03	/	79%
2440MHz	3.00	-1.07	/	78%
2450MHz	2.89	-1.09	-31.08	78%
2460MHz	2.88	-1.05	/	79%
2470MHz	3.03	-1.02	/	79%
2480MHz	3.07	-0.96	/	80%
2490MHz	3.00	-1.02	/	79%
2500MHz	3.12	-1.01	-20.26	79%
5150MHz	1.65	-4.02	-32.47	40%
5200MHz	2.36	-3.68	/	43%
5250MHz	2.26	-3.87	/	41%
5300MHz	2.46	-3.63	/	43%
5350MHz	2.39	-3.87	/	41%
5400MHz	2.39	-3.94	/	40%
5450MHz	2.30	-3.97	/	40%
5500MHz	2.44	-3.90	/	41%
5550MHz	2.49	-3.73	-27.54	42%
5600MHz	2.61	-3.65	/	43%
5650MHz	2.48	-3.49	/	45%
5700MHz	2.44	-3.45	/	45%
5750MHz	2.05	-3.55	/	44%
5800MHz	1.68	-3.68	/	43%
5850MHz	1.58	-3.75	-28.54	42%

GAIN-2.4G

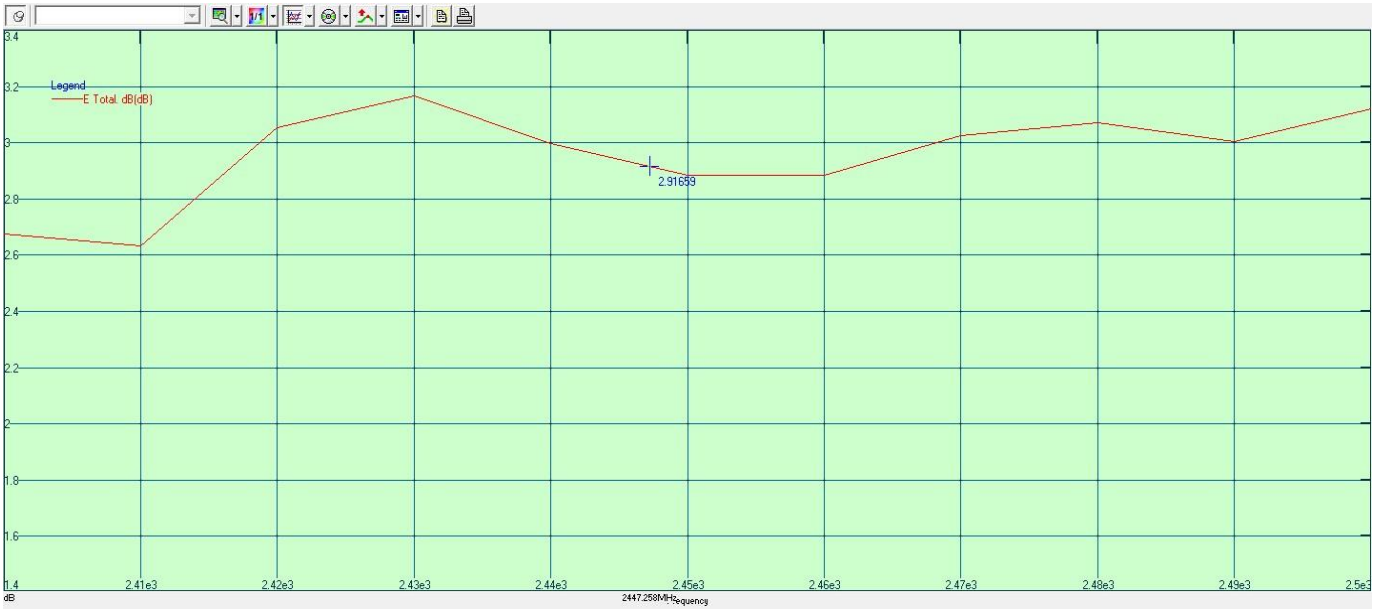

GAIN-5G

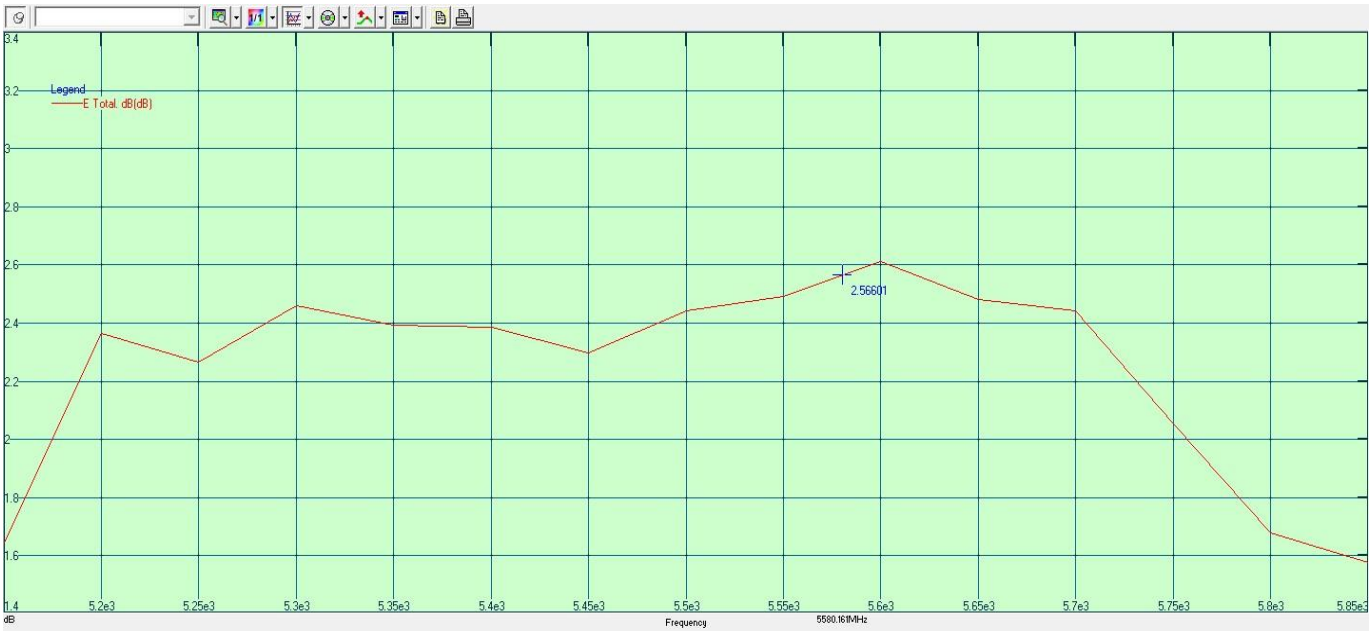

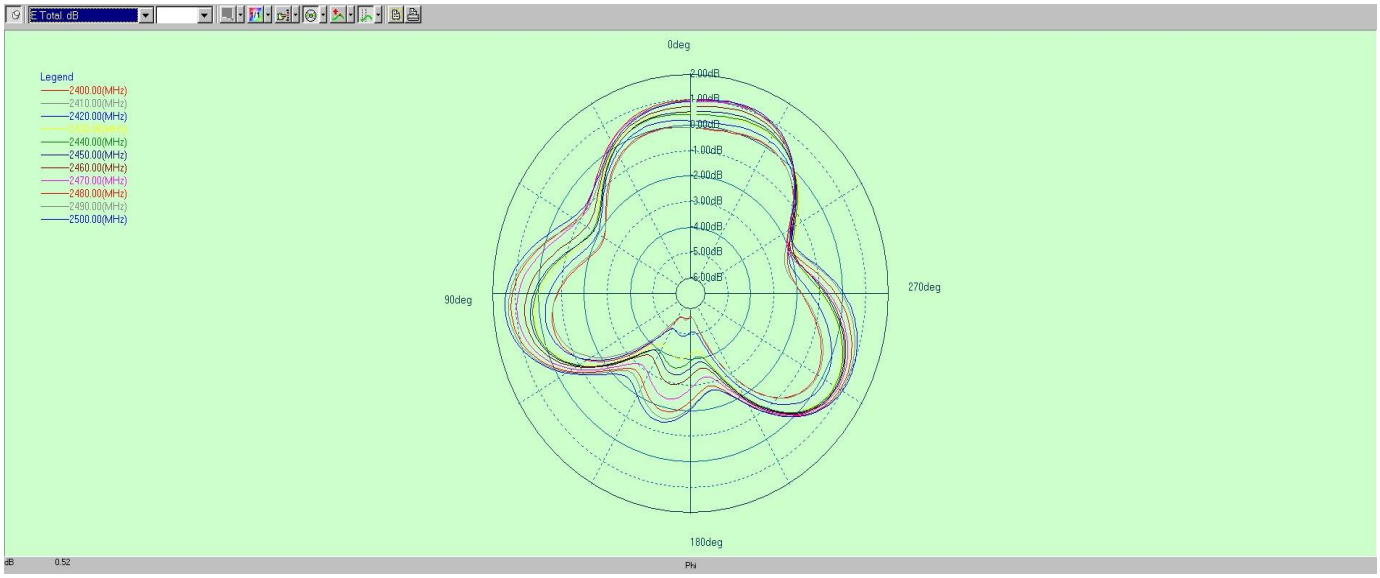
E Total, dB
0deg
Legend
2400.00(MHz)
2410.00(MHz)
2420.00(MHz)
2440.00(MHz)
2450.00(MHz)
2460.00(MHz)
2470.00(MHz)
2480.00(MHz)
2490.00(MHz)
2500.00(MHz)
2.00dB
1.00dB
0.00dB
1.00dB
2.00dB
3.00dB
4.00dB
5.00dB
6.00dB
90deg
270deg
180deg
dB
0.52
Phi

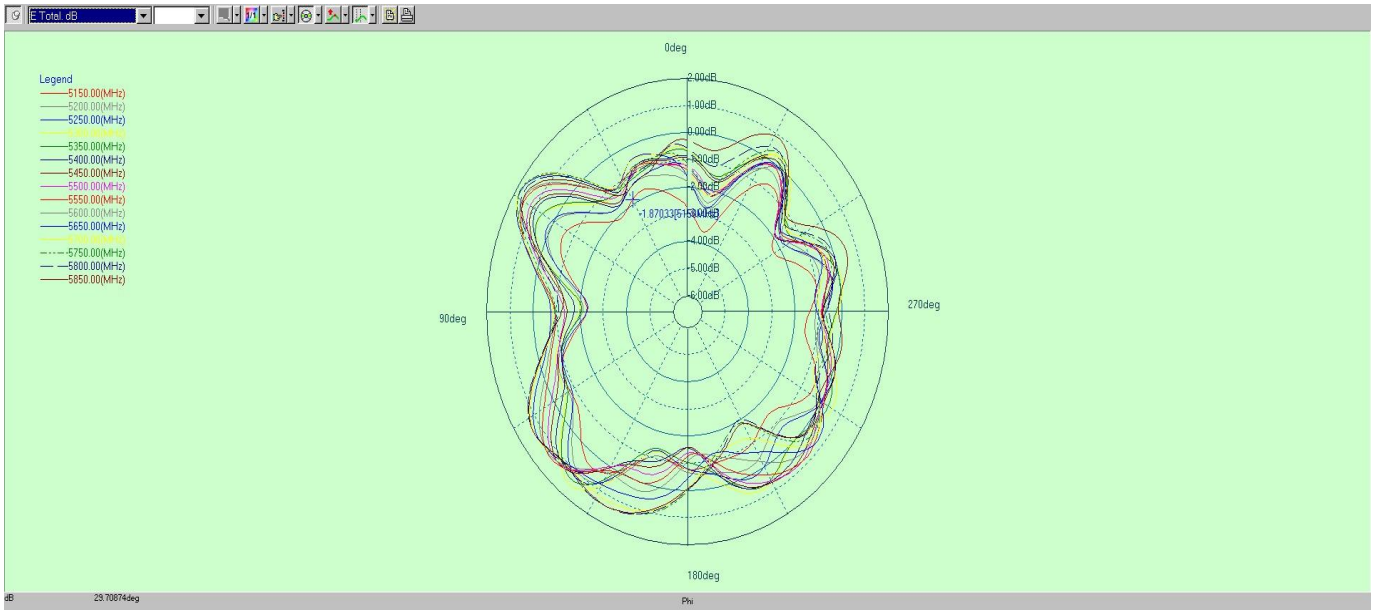
E Total, dB
0deg
Legend
5150.00(MHz)
5200.00(MHz)
5250.00(MHz)
5350.00(MHz)
5400.00(MHz)
5450.00(MHz)
5500.00(MHz)
5550.00(MHz)
5600.00(MHz)
5650.00(MHz)
5750.00(MHz)
5800.00(MHz)
5850.00(MHz)
2.00dB
1.00dB
0.00dB
1.87033(5150.00)dB
4.00dB
5.00dB
6.00dB
90deg
270deg
180deg
dB
29.70674deg
Phi