YAGUD®

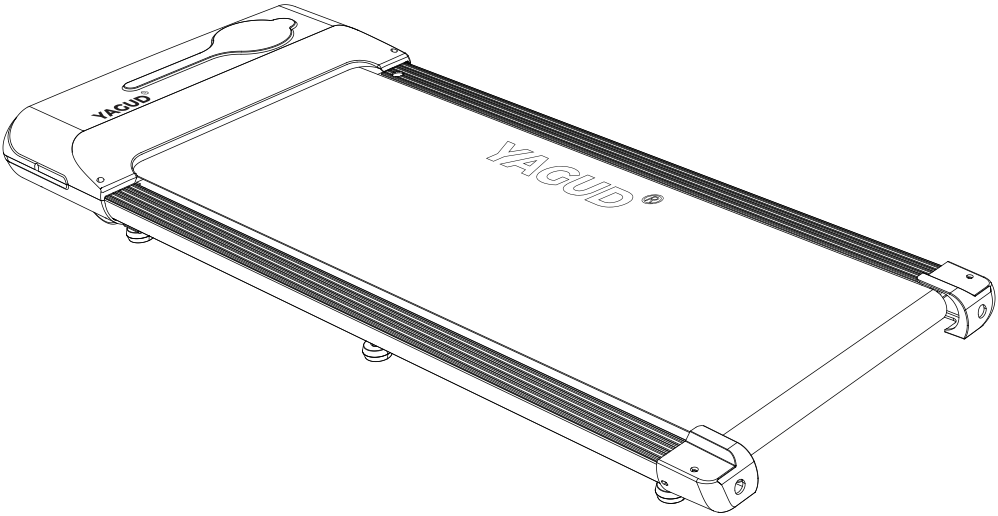

Table of contents

instructions for Safe use

Packing list

Product description

Remote control key description and pairing

Operation instructions

Plate lubrication

Running belt elastic adjustment

Exercise advice

Failure and maintenance

Warranty description

Instructions for Safe Use

Thank you for choosing our products. The correct use of the walking machine is your guarantee of safety and convenience. Please read the following carefully before using the walking machine:

1. Power on only after confirming that the electric walking machine has been installed in accordance with the installation instructions. Be careful not to make it block the plug on the wall when placed, and leave 0.8m space in front for easy insertion.
2. Reserve 0.8m safety space on both sides of the walking machine, and 2 m (length) *1 m (width) safety space behind the walking machine.
3. Insert the power cord into the power socket with safe grounding. The power supply of the electric walking machine is dedicated. If the power cord is damaged, please consult the after-sales staff of the platform, or contact the company directly, and send it to you by mail. Plug in the corresponding place.
4, walking machine is indoor equipment, do not use outside. The place is clean and smooth, pay attention to moisture-proof, and pay attention not to put the walking machine on the thick carpet, so as not to affect the flow of air under the walking machine. Electric walking machine is a special instrument, please do not modify it.
5, exercise can not wear too big, too loose clothes, can not wear slippers type shoes, in order to prevent hanging on the electric walking machine to cause safety accidents. Running shoes or exercise shoes with rubber soles are recommended.
6. Please do not remove the protective cover. If it needs to be opened for maintenance, please remove the power cord first.
7, electric walking machine in use, do not let children, pets close to prevent danger.
8. If you use the electric walking machine for the first time, the speed can not be too fast. Adjust the speed of the electric walking machine according to your own physical ability.
9. If the electric walking machine suddenly accelerates or the speed of the walking machine automatically increases due to the problem of the electronic watch system, please press the stop button of the remote control immediately, and the electric walking machine will stop immediately.
10. If the electronic system fails and cannot be stopped, please jump away from the walking area quickly and turn off the power in time.
11, electric walking machine when not in use, should unplug the power cord.
12. Minors should be accompanied by adults when using electric walking machines.

Packing list

1. Packing list

No.	Name	Quantity	Remarks
1	Complete machine (running platform)	1	
2	Accessory bag	1	See attached table
3	Specification	1	

2. Attached Table (List of parts Package)

No.	Name	Quantity	Remarks
1	6MM hex wrench	1	
2	Remote control	1	
3	Dual-purpose screwdriver	1	
4	Silicone oil	2	30ml
5	Button battery	1	

3. Technical parameter

Model	ZF-0301
Operating voltage	110V 50/60Hz
Maximum load	198 lbs
Overall dimension	49.8×20.3×4.7 inch
Effective running area	40.1×15.3 inch
Machine weight	51.8 lbs
Peak motor power	0.75-2.0HP
speed	0.6—3.8mph
function	walk

Product description

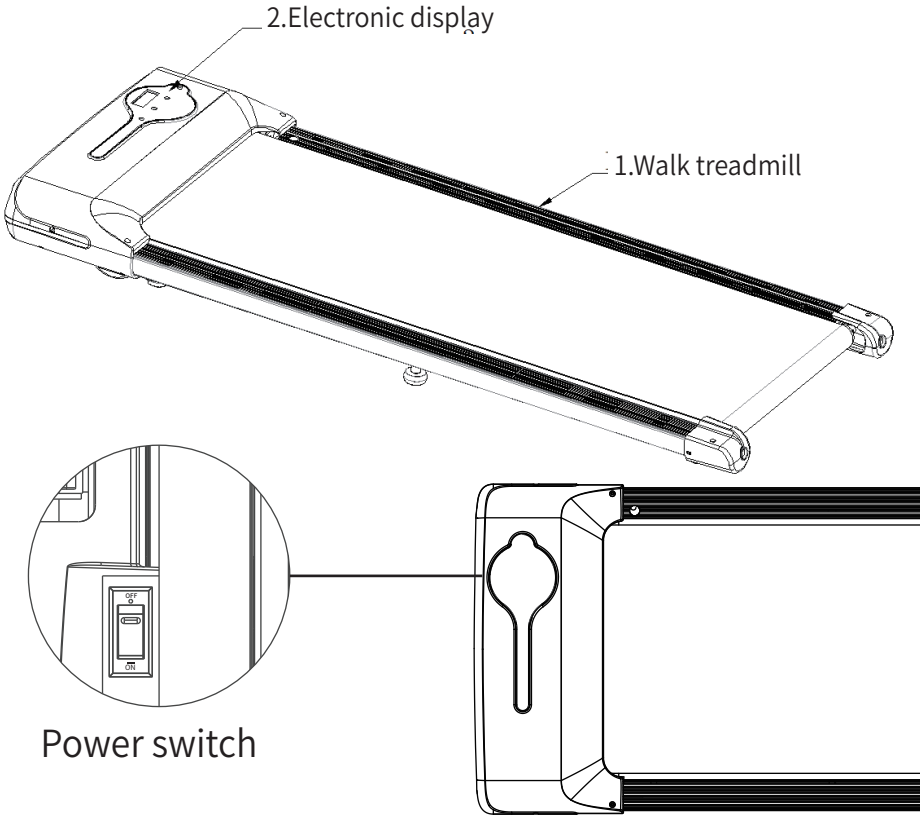

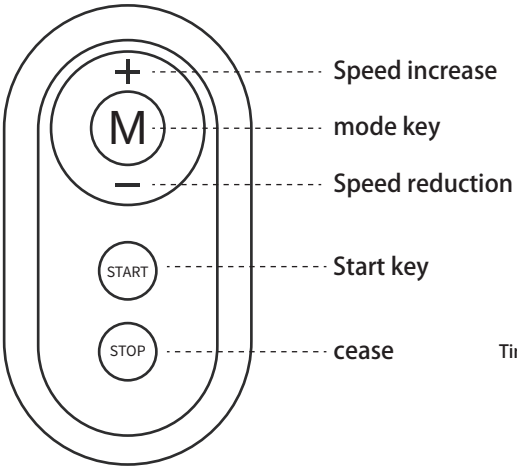

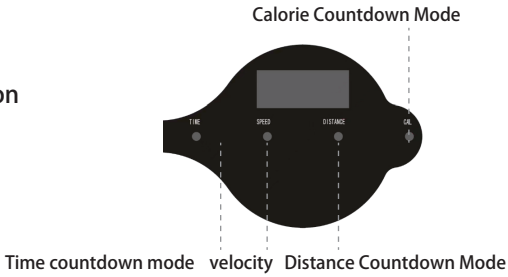

Remote Control Description

Attention:
The plastic sheet must
be removed before use

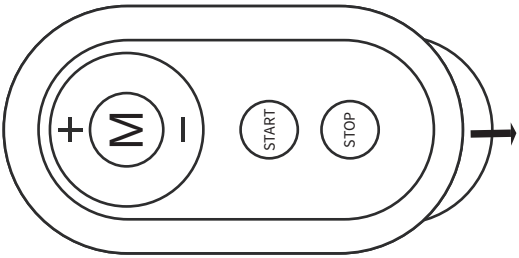

Attention:
Open the battery rear cover

1、First place one hand in this groove and apply force in thisdirection

2、At the same time, place the other handon the raised patternand apply force in this direction

Key function description

Speed increase

In the running state, the running speed value can be increased to 0.2mph each time

deceleration

In the running state, the speed value can be reduced to 0.2mph per run

Usage pattern The machine has four operating modes:

Mode 1: Speed mode
Mode 2: Time countdown mode
Mode 3: Distance reverse meter mode
Mode 4: Calorie count mode

Press a button to switch
Start key Start the walking machine Stop key Press the motor to stop running

Note:
The remote control has been paired with the treadmill before delivery and can be used directly
If you need to pair again, the matching method is as follows: before the treadmill is powered on, hold down the start button of the remote control (within 10cm of the treadmill display screen); then, when the treadmill is powered on, the buzzer will ring five times quickly and the treadmill will enter the standby state, indicating successful pairing. At this time, you can release the button; If the buzzer does not ring five times quickly after the treadmill enters the standby state, the pairing fails.

Operation instructions

Flip the switch to turn on the treadmill
The function indicator jumps automatically after 00 , 8 seconds on the initial screen

Mode 1: speed mode

Stand on the treadmill
Press the Start button, countdown 5 seconds to start running
The initial treadmill speed is 0.6MPH. Press +/- to adjust the speed
Time, speed, distance, calorie four interface jump in turn
Time timing,The machine will stop automatically if the time exceeds 99:59
Press stop to exit the mode and return to the initial screen

Mode 2: Time countdown mode

Stand on the treadmill
Press M to switch to H - 1
Wait until the screen blinks at 30:00 and press the +/- key. The adjustable range is from 8:00 to 99:00
Press the Start button, countdown 5 seconds to start running
The initial treadmill speed is 0.6MPH. Press +/- to adjust the speed
Time, speed, distance, calorie four interface jump in turn
Distance and calorie count
Press stop to exit the mode and return to the initial screen

Mode 3: Distance reverse meter mode

Stand on the treadmill
Press M to switch to H - 2
Wait until the screen blinks 1.00 and press +/- to adjust. Adjustable range :1.00-99.00
Press the Start button, countdown 5 seconds to start running
The initial treadmill speed is 0.6MPH. Press +/- to adjust the speed
Time, speed, distance, calorie four interface jump in turn
Time and calories count
Press stop to exit the mode and return to the initial screen

Mode 4: Calorie count mode

Stand on the treadmill
Press M to switch to H - 3
Wait until the screen flashes 50.00 and press +/- to adjust the value. Adjustable range :20-990
Press the Start button and countdown 5 seconds to enter
Press the +/- key to adjust the speed
Time, speed, distance, calorie four interface jump in turn
Time and distance count positively
Press stop to exit the mode and return to the initial screen

Note

1. No stop function: After starting the treadmill, if no one runs for more than five seconds, the treadmill will automatically stop
2. Hibernation function: When the treadmill stops running, if there is no operation for more than 10 minutes, it will enter hibernation state. The electronic watch will automatically close the display and press any key to wake up

Plate lubrication

1, we mentioned above should be timely to the running plate lubrication, but not excessive lubrication, lubricant is not the more the better. Remember: reasonable lubrication is an important factor to improve the service life of the walking machine.
2, check whether you need to put on the lubricant, as long as you grab the running belt, touch your hand as far as possible to the center of the back of the running belt, if your hands are stained with silicone oil (a little wet feeling), that is, you do not need to put on the lubricant, if the running board is dry and hands did not stick to the silicone oil, you need to add lubricating silicone oil.
3, the running board coated with lubricating silicone oil steps:
a. Set the walking machine to a low speed running 0.6mph;
b. Open the cover on the right side of the front end of the ru nning platform under the refueling mark; Insert the spout into the nozzle of the filling tube and gently squeeze the oil can to spray the silicone oil onto the running belt. Run the treadmill at 0.6 MPH /h to evenly apply the silicone oil. Gently step on the running belt from left to right for 8 to 10 minutes until the silicone oil is completely absorbed into the running belt.

Running belt elastic adjustment

All walking machines should be adjusted before leaving the factory and after installation, but there may be slack phenomenon after a period of use. For example: when the user runs, there is a pause and skid. When this phenomenon occurs, in the clockwise direction of half a circle as a unit, the left and right synchronous adjustment belt adjustment bolt. (If you want to loose running belt, on the contrary, in the counter-clockwise direction of operation) run belt loose, foot in the running belt, running belt and drum will produce skid phenomenon, but too tight is not good, easy to increase the load of the motor, damage the motor, running belt and drum.
The running belt is centered

1. Put the electric walking machine on the flat ground.
2. Run an electric walker at about 2.0mph.
3. If the running belt is tilted to the left, rotate the left adjusting bolt 1/2 turn clockwise and the right adjusting bolt 1/2 turn counterclockwise
4. If the running belt is biased to the right, rotate the right adjusting bolt in a clockwise direction for 1/2 turn, and then rotate the left adjusting bolt in a counterclockwise direction for 1/2 turn

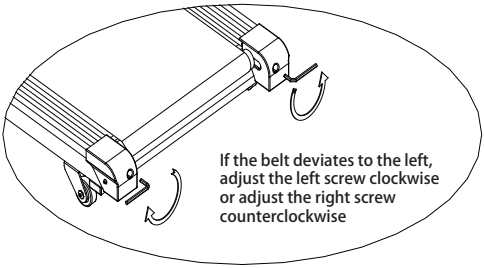

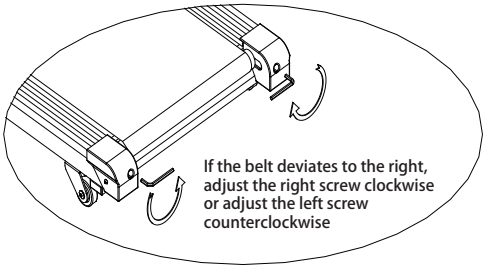

Exercise advice

Consult a professional before exercising. He can help you recommend the frequency, intensity and duration of exercise appropriate for your age and physical condition. If you feel chest tightness or pain, irregular heartbeat, shortness of breath, dizziness or other discomfort while exercising, please stop immediately! Consult a professional before continuing to exercise.

prepare

Before exercise, it is necessary for you to understand your own health status, in order to make their own exercise plan, it is recommended to consult a doctor or professional, maybe you can get twice the result with half the effort.

efore using the electric walking machine for the first time, please stand next to it and familiarize yourself with how to control it: start, stop and speed adjustment, etc., before you can use it. Then stand on the plastic anti-skateboard on both sides of the walking machine, grab the handrail with both hands, open the machine to a low speed

of 1.6~3.2 km/h, stand up straight, look forward, use one foot in the running belt "climb" a few times, as relaxed as possible: then stand on the running belt with its movement. After feeling comfortable, slowly increase the speed to 3-5 km/h. Keep going at this speed for about 10 minutes, then slowly bring the machine to a stop. Do not run at high speed for the first time to avoid falling.

Do it again at the end of your workout.

1. Stretch down
Bend your knees slightly and slowly bend forward, letting your back and shoulders relax and touching your toes with your hands. Hold for 10-15 seconds. Then relax. Repeat 3 times on each leg
2. Stretching of hamstrings
Sit on a clean cushion and stretch one leg straight. Pull the other leg in so that it fits snugly against the inside of the extended leg. Try to touch your toes with your hands. Hold for 10-15 seconds, then relax. Repeat 3 times on each leg.
3. Stretch the little foot and heel tendon
Stand with two hands against a wall or tree, one foot behind. Keep your hind legs upright and your heels on the ground, leaning toward a wall or tree. Hold for 10-15 seconds, then relax. Repeat 3 times on each leg
4. Quadriceps stretch
Balance on a wall or table with your left hand, then reach back with your right hand, grab your right ankle and slowly pull toward your hip until you feel tension in the front of your thigh. Hold for 10-15 seconds, then relax. Repeat 3 times on each leg.
5. Sartorius (inner thigh muscles) stretch
Sit with your feet facing each other and your knees facing out. Grab your feet with both hands and pull toward your groin. Hold for 10-15 seconds, then relax. Repeat 3 times.

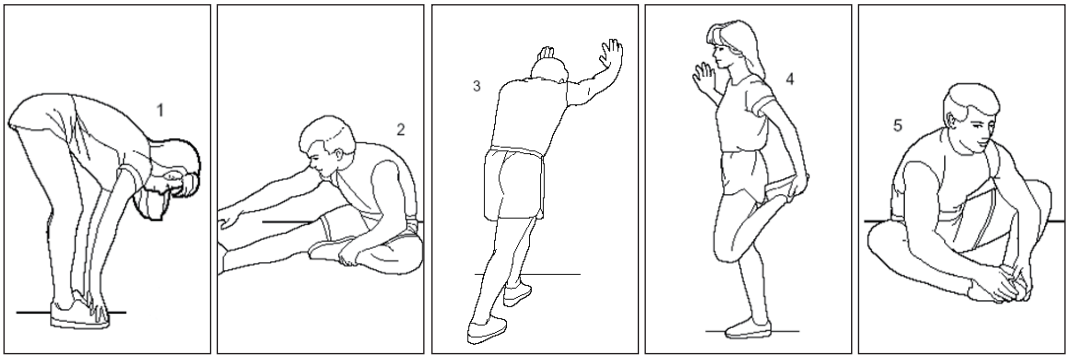

Failure and maintenance

E01: Common Problem Solving Methods	The communication line of the electronic watch is not properly connected, broken, and has poor contact	Please reconnect the communication cable
	Electronic watch has no signal output	Replace the electronic watch and wait for repair
	No signal output from lower control	Replace the lower control and wait for repair

E02: Common Problem Solving Methods	The motor wire is not properly connected	Check if the motor wires are connected correctly
	No voltage output or abnormal voltage output from the lower control to the motor	Replace the lower control and wait for repair
	Poor motor	Replacing the motor

E03: Common Problem Solving Methods	The treadmill has a large load exceeding the rated working voltage of the motor	It is recommended to use it within the rated working voltage range of the motor
	Abnormal treadmill motor	Replacing the motor
	Failure of the motor overvoltage measuring circuit on the lower control board	Replace the lower control and wait for repair

E04: Common Problem Solving Methods	The treadmill load exceeds the rated working current of the motor	It is recommended to operate within the rated current range of the motor
	Problem with the assembly structure of the treadmill and motor, causing motor resistance or blockage	Check if the structure of the treadmill is normal
	Fault in the lower control current limiting system	Replace the lower control and wait for repair

E05: Common Problem Solving Methods	The power supply voltage is too low	Please check if the power supply line is normal
	The testing circuit of the lower control board is invalid	Replace the lower control and wait for repair

Warranty description

Important information:

We are not responsible for any failure caused by incorrect installation, use or replacement of parts by customers themselves. In addition, the warranty does not apply to the person who has not been authorized by the Company to repair, if the resulting repair costs, the customer himself shall be responsible.

This product is for home use only. The company will not be responsible for any problems caused by commercial use.

The warranty lasts for 1 year

FCC Statement:

This device complies with part 15 of the FCC Rules. Operation is subject to the following two conditions: (1) This device may not cause harmful interference, and (2) this device must accept any interference received, including interference that may cause undesired operation.

This equipment has been tested and found to comply with the limits for aClass B digital device, pursuant to part 15 ofthe FCCRules. Theselimits aredesigned to provide reasonable protection against harmful interference in a residential installation. This equipmentgenerates,usesandcanradiateradiofrequencyenergyand,ifnotinstalled andused inaccordance withthe instructions,may causeharmfulinterferencetoradio communications.However,there isno guaranteethatinterferencewill notoccur ina particularinstallation.Ifthisequipmentdoescauseharmfulinterferencetoradioor television reception, which can be determined by turning the equipment off and on, the user is encouraged to try to correct the interference by one or more of the following measures:

—Reorient or relocate the receiving antenna.

—Increase the separation between the equipment and receiver.

—Connect the equipment into an outlet on a circuit different from that to which the receiver is connected.

—Consult the dealer or an experienced radio/TV technician for help.

Caution: Any changes or modifications not expressly approved by the party responsible for compliance could void the user's authority to operate the equipment.

Thisequipment complies withFCC radiation exposure limits setforth for an uncontrolled environment. This transmitter must not be co-located or operating in conjunction with any other antenna or transmitter.