User Manual

Model: GPWP001

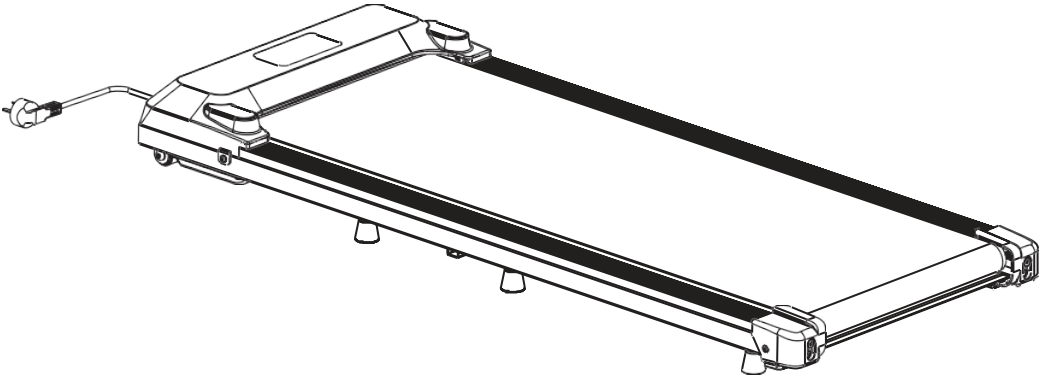

Before using this product, please read the product manual carefully.

EN V1.2.1

CATALOG

I. Safety Precautions and Warning Instructions.....01

II. Warm-up Exercise.....03

III. Product Introduction.....05

IV. Using Introduction.....07

V. Error Codes and Solution.....09

VI. Maintenance.....10

I. Safety precautions

⚠ In order to ensure your safety and avoid accidents, please read the instructions carefully before use.

● This product is only for indoor use, please do not use it outdoors. The treadmill should be placed in a fiat and clean position, not on a thick carpet or near water, and there should be a 1*2m barrier-free safe area behind the treadmill.

● This product is for adults, minors need adult care. Persons who are unwell, mentally handicapped or lack common sense are not allowed to use this product unless they are under the supervision or guidance of another person.

● If the power cord is damaged, in order to avoid danger, it must be replaced by the manufacturer or professional maintenance personnel.

● This product is only used for 100V-120V AC voltage. Please use the power socket with safe ground line. The installation and grounding of the grounding plug must be consistent with the parameters of the user's area. If the plug and socket are incompatible, please arrange qualified electricians or after-sales personnel to handle it.

● When using it, please wear comfortable and tight clothes to avoid the clothes being hung by the machine. Don't let children or pets come near to avoid accidents.

● Avoid all moving parts with both hands. Do not put hands and feet in the space under the running belt.

● This product is suitable for home use, not suitable for professional training and t esting, and can not be used for medical purposes.

● This product is only for one person on the running belt.

● Before dleaning and maintenance, please shut down and unplug the power plug.

● Turn off the machine and unplug the power plug when you leave.

● Please use the spare parts provided by the original factory. It is strictly forbidden to replace them privately.

● This product is of HC grade, and maximum person weight is 265 LBS.

2. Quality Assurance Commitment

We ensure that the product is made of high quality materials.
We will be responsible for the warranty if there are problems with the product during normal use.
The warranty period is one year (from the date of purchase). If you buy the product with quality problems, please contact our customer service within 12 months.
Please do not deal with them without permission. The followings are not covered by the warranty:

- Damage caused by external factors.
- Use non-original accessories.
- Priately handled incorrertly.
- Not follow the instructions.

This product is only for private use at home, not for professional training such as gyms.
If you need to buy non-warranty accessories, please contact customer service.
Please provide the following information when ordering:

- Instructions.
- Product model.
- Fittings serial number.
- Certificate of purchase date.

Before the confirmation of our customer service, please do not send the product to our company,and send them back without permission. Our company does not bear any cost.

II. Warm-up Exercise

Before exercising, it's better to do stretching exercises first. A successful exercise plan must include warm-up, aerobic and relaxation exercises. The number of exercises should be at least two or three times a week. You can take a day off for exercise. After a few months, you can increase the number of exercises to four to five days a week.

Warm-up is an important part of your fitness exercise. Warm-up before every exercise. Moderate warming-up can prepare your body for the next more intense exercise, because warming-up can help muscle warm up and stretch, improve blood circulation and pulse, and send more oxygen into muscle. Repeated warm-up exercise can also reduce muscle soreness after aerobic exercise. We recommend the following warm-up and relaxation exercises.

1.Stretch downward: Bend your knees slightly and bend your body forward slowly. Relax your back and shoulders and touch your toes with both hands. Hold for 10 to 15 seconds, then relax. Repeat three times. Figure 1

Figure 1

2.Stretch your ankles: Sit on a clean cushion and straighten one leg. Put the other leg inward so that it is close to the straight leg. Try to touch your toes with your hands.Keep it for 10 to 15 seconds. Then relax.Repeat each leg three times.Figure 2

Figure 2

3.Extension of the calf and foot tendons: body forward hands agains the wall the left leg arches forward, the right leg is straight, the left le is on the ground, then bend your left leg and hold it for 10 to 15 seconds, then relax, repeat each leg three times.
Figure 3

Figure 3

4.Head movement: 1-tilt your head to the right and feel the left neck muscle stretch; 2-turn head to the back; 3-turn head to the left; 4-turn your head to front of the chest. then relax and do it three times.
Figure 4

Figure 4

5.Waist movement: stretch your arms to the left and right, then slowly lift it up, over your head. Put your right arm as far as possible to the ceiling.Straighten, hold for 1 second, and feel the stretch of your right muscle. Repeat the same action on the left arm.
Figure 5

Figure 5

III.Product Introduction

Technical Parameter:

Voltage	AC 120V 60Hz
Max Loaded	265LBS
Product Size	1183*490*113mm
Package Size	1270*580*135mm
Power	550W
Speed	0.6-3.8MPH
Console	Remote Controller
Net weight	18KG(39.7LBS)
Gross weight	21KG(46.3LBS)

Attached(Lists):

No.	Name	Quantity	Remarks
1	5mm Inner hexagon spanner	1	Other
2	6mm Inner hexagon spanner	1	Adjust the running belt
3	Wrench	1	
4	Remote Controller	1	
5	Silicone Oil	1	
6	Instructions, Qualification	1	

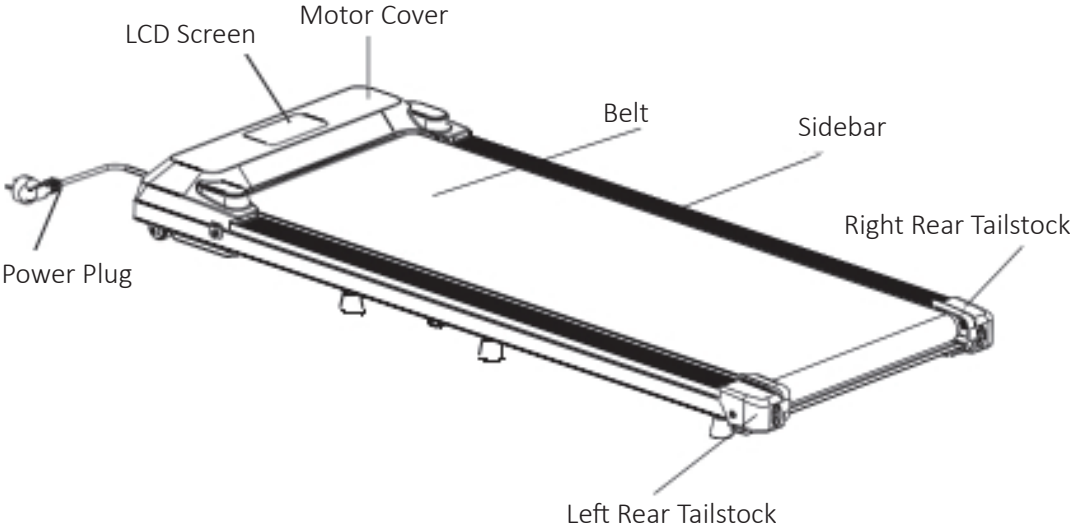

Assembly instructions

Assembly steps

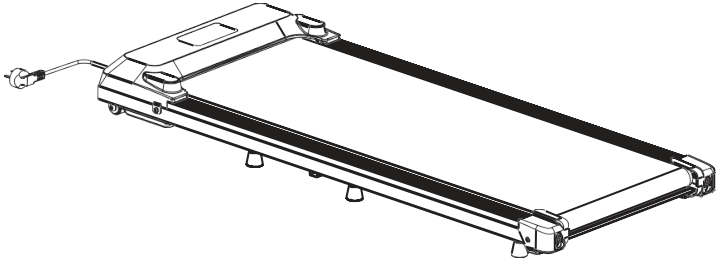

Take out the accessories and the machine from the box, and put the machine on a flat ground, then connect it to the power and use it.

IV.Using Introduction

Treadmill User Manual

1. Connect the power supply to check if the machine is working properly.
2. Before exercising, check the stability and function of the walking machine.

It is strictly prohibited to start the walking machine while standing on the running belt. Before running, stand on the edge, hold the remote control in hand, and wait until it starts normally before starting the machine for exercise. When turning on the machine, press the "⏻" button on the remote control with one hand, and the walking machine will start with a delay of 3 seconds, running at a speed of 0.6MPH. Press "+" to increase the motor speed to reach a speed of 2.5-3.5MPH (which is the most comfortable speed for learning to run). Step onto the running belt with both feet one after another, and you will soon be able to keep up with the speed of the running belt.

3.After a few minutes, you can increase your running speed by pressing the'+'key on your spreadsheet. You can also press the'-'key to slow it down.

4.You can press the "⏻" key on the remoter controller at any time during the operation to stop the motor.

Reminder: This remote control does not need to be paired, just turn on the walking machine and remove the paper inserted on the remote control battery.

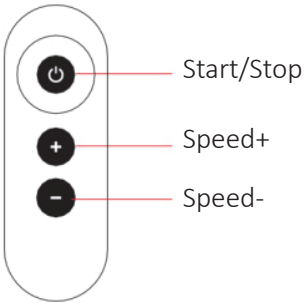

Remote Control Button Description

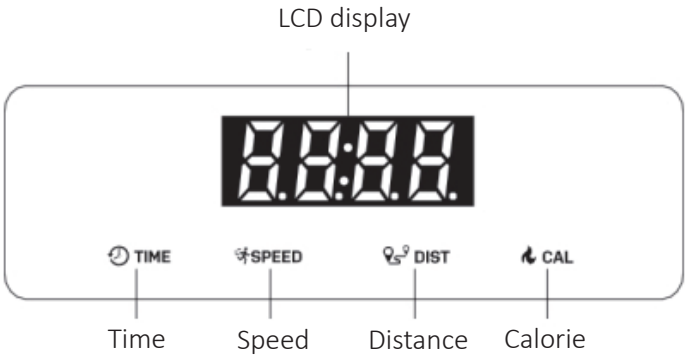

LCD display Introduction

1.The LCD window displays the following functions:

Three windows display time, speed, distance, and calorie data, with time and speed switching display,

Time display range： 0:00-99:59

Speed display range： 0.6-3.8

Distance display range： 0.00-99.99

Calorie display range： 0.00-999

Startup Instructions

1. Turn on the power switch and the system enters standby mode.

2. The window displays a 3-second countdown, and the buzzer beeps once for each decrease before starting the motor.

3.The starting speed is 0.6 mph. At this time, you can press the speed+and - keys on the remote control to adjust the speed.

V.Error Codes and Solution

If you have any other questions, please call your dealers or our company's after-sales service.

Error	Reason	Solution
Treadmill does not work	Disconnect the power	Plug socket
	Fail to turn on	Place the power switch in ON position
	Safety lock suction	Suck the safety lock into the lock position
	Circuit Signal System Break	Check controller terminals and signal lines
	Fuse Burn	Replace fuse
Running with transport do not smooth	Not enough lubrication	Add methyl silicone oil lubricant
	Running Belt Too Tight	Adjusting belt tension
Slipping of running belt	Loose running band	Adjusting belt tension
	Sliver with loose band	Adjust slack belt

Displaying Error Information and Eliminating Method of Electricity

Error	Reason	Solution
E01	Communication issues with upper and lower controls	1.Check if the upper and lower air connection wires are not in good contact. If they are not in good contact, please plug the wires into the buckle to eliminate the problem. 2. Check the appearance of the wires for any twisting or skin damage. If this phenomenon occurs, replace the connecting wires.
E02	Whether the motor wire is loose or falling off and the carbon brush is worn out	Please check if the motor wires are in good contact. If the contact is good, please check if the motor has any odor or burning smell. If there is any problem, the motor needs to be replaced.
E05	Overcurrent protection	Please turn off the power and plug it in again
E06	Overload protection	Replace the fuse of the controller
Significant abnormality	External disturbance	Turn off the power switch and electrify after 1 minute.

VI.Maintenance

1.Adjusting the Running Belt

1.After lubricating the running belt for a period of time, it must be lubricated with a specially configured monthly silicone oil. Suggest:
Use time less than 3 hours per week; lubricate once every 5 months Use 4~7 hours per week; lubricate once every 2 months
Weekly use time is more than 7 hours; 1 month lubrication 1 time Do not over lubricate, the more lubricant is not the better.
Set the machine to 1 MPH speed, and extrude the appropriate amount of oil at the orifice of the oil bottle, about 5 ml each time.
Note: Reasonable lubrication is an important factor to improve the service life of the treadmill.

2.Add Lubricating Oil To The Walking Machine

- The refueling position is on the lower surface in the middle of the running belt. (As shown below)
- Cut the mouth of the oil bottle into a small mouth, not too large, and able to inject.
- Raise the running belt so that the oil bottle is extended to the bottom of the running belt and the oil is injected into the middle of the running board. Put down the running belt, press the oil injection part with your hand, and rotate the running belt to spread the oil evenly on the running board.
- After turning on the machine, wait one minute for the oil to be applied evenly, and then use the treadmill.

Note: Please turn off the power of the machine before refueling the running belt.

3. Maintenance Guides

Warning: Be sure to unplug the power plug of the machine before maintaining the product.

- Use cloth to clean product surface.
- Full cleaning will prolong the service life of the machine.
- Clean the dust regularly to keep the parts clean. Clean the exposed parts on both sides of the running belt. This will reduce the accumulation of impurities in the running belt. Keep your sneakers clean. Avoid bringing foreign bodies under your running belt and wearing your running board and belt. The surface of the running belt should be scrubbed with a soapy wet cloth. Please be careful not to splash water on the electrical components and under the running belt.
- Check and lock all parts of the treadmill regularly, replace defective parts and/or leave the equipment idle for repair.

Adjusting the Running Belt

If you are using a walking machine, you can adjust the belt tightness to improve the slippage or non-fluidity of the running belt.
Adjusting running has two functions: tightening adjustment and belt center position adjustment. Running belt has been adjusted when it is out of the factory, but after use, the running belt will be stretched, which will deviate from the center position and cause the running belt to rub the foot sidebars and rear cover damage. It is normal for the running belt to be stretched during use.
When the product is running under no load, it is normal for the running belt to have a side deviation of no more than 5mm.

Adjusting Running Belt Method

◆ The running belt shifts to the left

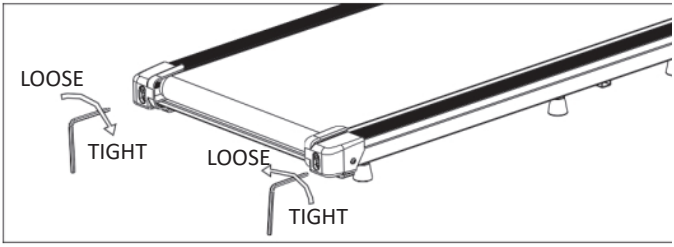

Adjustment method: With the power turned off, take a 5mm hexagon wrench and turn the left rear roller bolt 1/4 turn to the right to tighten the running belt. Then the machine is powered on and the test running belt is centered. Follow this method until the running belt is centered.

◆ The running belt shifts to the right

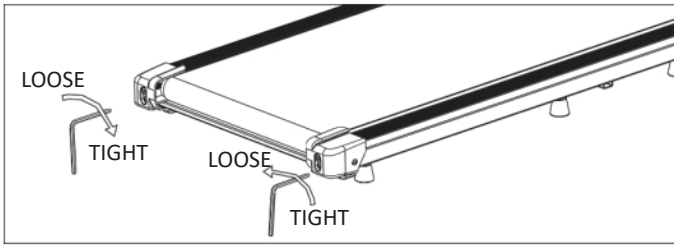

Adjustment method: With the power turned off, take a 5mm hexagon wrench and turn the right rear roller bolt 1/4 turn to the right to tighten the running belt. Then the machine is powered on and the test running belt is centered. Follow this method until the running belt is centered.

Adjustment method: With the power turned off, take a 5mm hexagonal wrench and turn the left and right bolts of the rear drum 1/4 turn to the right at the same time to tighten the running belt. Then the machine is powered on to test the tightness of the running belt. Follow this method until the tightness of the running belt is moderate.

Note: When you use a walking machine, the pressure on the running belt is not balanced due to the difference in the force used by the two feet when running, causing the running belt to deviate from the center. This kind of deviation is normal. When no one is running on the running belt, it will return to the center.

The running belt cannot be adjusted too tight. This will damage the running belt, increase the pressure on the front/rear rollers, cause damage to the roller bearings, etc., cause abnormal noise or other problems.

FCC Warning Statement

Changes or modifications not expressly approved by the party responsible for compliance could void the user's authority to operate the equipment. This equipment has been tested and found to comply with the limits for a Class B digital device, pursuant to Part 15 of the FCC Rules. These limits are designed to provide reasonable protection against harmful interference in a residential installation. This equipment generates uses and can radiate radio frequency energy and, if not installed and used in accordance with the instructions, may cause harmful interference to radio communications. However, there is no guarantee that interference will not occur in a particular installation. If this equipment does cause harmful interference to radio or television reception, which can be determined by turning the equipment off and on, the user is encouraged to try to correct the interference by one or more of the following measures:

-- Reorient or relocate the receiving antenna.

-- Increase the separation between the equipment and receiver.

-- Connect the equipment into an outlet on a circuit different from that to which the receiver is connected.

-- Consult the dealer or an experienced radio/TV technician for help.

This device complies with part 15 of the FCC Rules. Operation is subject to the following two conditions:

(1) This device may not cause harmful interference.

(2) this device must accept any interference received, including interference that may cause undesired operation.

The device has been evaluated to meet general RF exposure requirement.

For Canada, please refer to IC-ID (ISED) related regulations.