FCC PART 15C
Measurement and Test Report
For
Jiangxi Shuopai Fitness Equipment Co., Ltd.

FCC ID:2BA8K-S1

FCC Rule(s)/Methods:	FCC CFR Title 47 Part 15 Subpart C Section 15.231 ANSI C63.10:2013
Product Description:	FITNESS WALKER
Trademark	N/A
Model/Type reference.:	N3800, N3801, N3802, N3803, N3804, N3805, N3806, N3807, N3808, N3809, N3810, T3800, T3801, T3802, T3803, T3804, ZX1, ZX3, ZX5, ZX7, ZX9, GPWP001, W01-T, SP-T3800, GPWP001，URTM023- Urevo, URTM025
Report No.:	BSL2305318275002F
Date of receipt of test item :	May 15, 2023
Date of sampling :	May 15, 2023
Tested Date:	May 15, 2023 to June 12, 2023
Issued Date:	June 12, 2023
Tested By:	Cindy Zheng/ Engineer
Reviewed By:	Haley Wen/ EMC Manager
Approved & Authorized By:	Mike Mo / PSQ Manager

BSL Testing Co.,LTD.
1/F, Building B, Xinshidai GR Park, Shiyan Street, Bao'an District, Shenzhen, Shiyan Street, Bao'an District, Shenzhen, Guangdong, 518052, People’s Republic of China
Tel: 400-882-9628 Fax: 86- 755-26508703

Table of Contents **Page**

1. VERSION 4
2. SUMMARY OF TEST RESULTS 5
2.1 TEST FACILITY 6
2.2 MEASUREMENT UNCERTAINTY 6
3. GENERAL INFORMATION 7
3.1 GENERAL DESCRIPTION 7
3.2 DESCRIPTION OF TEST MODES 8
3.3 BLOCK DIGRAM SHOWING THE CONFIGURATION OF SYSTEM TESTED 8
3.4 DESCRIPTION OF SUPPORT UNITS(CONDUCTED MODE) 8
3.5 EQUIPMENTS LIST FOR ALL TEST ITEMS 9
4. EMC EMISSION TEST 10
4.1 CONDUCTED EMISSION MEASUREMENT 10
4.1.1 POWER LINE CONDUCTED EMISSION LIMITS 10
4.1.2 TEST PROCEDURE 11
4.1.3 DEVIATION FROM TEST STANDARD 11
4.1.4 TEST SETUP 11
4.1.5 EUT OPERATING CONDITIONS 11
4.1.6 TEST RESULTS 11
4.2 RADIATED EMISSION MEASUREMENT 12
4.2.1 RADIATED EMISSION LIMITS 12
4.2.2 TEST PROCEDURE 13
4.2.3 TEST SETUP 14
4.2.4 EUT OPERATING CONDITIONS 15
4.2.5 TEST RESULTS 15
5.1 APPLIED PROCEDURES / LIMIT 20
5.2 TEST PROCEDURE 20
5.3 DEVIATION FROM STANDARD 20
5.4 TEST SETUP 20
5.5 EUT OPERATION CONDITIONS 20
5.6 TEST RESULTS 21
6. CALCULATION OF AVERAGE FACTOR 22
7. DWELL TIME 24
7.1 APPLICABLE STANDARD 24
7.2 TEST PROCEDURE 24
7.5 EUT OPERATION CONDITIONS 24
7.6 TEST RESULTS 25

Table of Contents **Page**

8. ANTENNA REQUIREMENT 26
9. TEST SETUP PHOTO 27
10. EUT CONSTRUCTIONAL DETAILS 27

1. VERSION

Report No.	Version	Description	Approved
BSL2305318275002F	Rev.01	Initial issue of report	June 12, 2023

2. SUMMARY OF TEST RESULTS

Test procedures according to the technical standards:

FCC Part15 (15.231) , Subpart C			
Standard Section	Test Item	Judgment	Remark
15.207	Conducted Emission	N/A	
15.209,15.231b	Fundamental &Radiated Spurious Emission Measurement	PASS	
15.231c	Occupy Bandwidth	PASS	
15.231a	Dwell time	PASS	
15.203	Antenna Requirement	PASS	

NOTE:

(1)" N/A" denotes test is not applicable in this Test Report

2.1 TEST FACILITY

Shenzhen BSL Technology Co., Ltd.
Add. : 1/F, Building B, Xinshidai GR Park, Shiyan Street, Bao'an District, Shenzhen, Shiyan Street, Bao'an District, Shenzhen, Guangdong, 518052, People′ s Republic of China

FCC Test Firm Registration Number: 562200
Designation Number: CN1338
IC Registered No.: 11093A
Designation Number: CN0019

2.2 MEASUREMENT UNCERTAINTY

The reported uncertainty of measurement y ± U，where expended uncertainty U is based on a standard uncertainty multiplied by a coverage factor of k=2，providing a level of confidence of approximately 95 %。

No.	Item	Uncertainty
1	3m camber Radiated spurious emission(9KHz-30MHz)	U=4.5dB
2	3m camber Radiated spurious emission(30MHz-1GHz)	U=4.8dB
3	3m chamber Radiated spurious emission(1GHz-6GHz)	U=4.9dB
4	3m chamber Radiated spurious emission(6GHz-40GHz)	U=5.0dB
5	Conducted disturbance	U=3.2dB
6	RF Band Edge	U=1.68dB
7	RF power conducted	U=1.86dB
8	RF conducted Spurious Emission	U=2.2dB
9	RF Occupied Bandwidth	U=1.8dB
10	RF Power Spectral Density	U=1.75dB
11	humidity uncertainty	U=5.3%
12	Temperature uncertainty	U=0.59℃

3. GENERAL INFORMATION

3.1 GENERAL DESCRIPTION

Applicant:	Jiangxi Shuopai Fitness Equipment Co., Ltd.
Address of applicant:	Wudu Machinery Marufacturing industrial Pank, Xiushui , Jiujang, Jiangxi.China
Manufacturer:	Jiangxi Shuopai Fitness Equipment Co., Ltd.
Address of manufacturer:	Wudu Machinery Marufacturing industrial Pank, Xiushui , Jiujang, Jiangxi.China
Equipment	FITNESS WALKER
Trade Name	N/A
Model Name	N3800, N3801, N3802, N3803, N3804, N3805, N3806, N3807, N3808, N3809, N3810, T3800, T3801, T3802, T3803, T3804, ZX1, ZX3, ZX5, ZX7, ZX9, GPWP001, W01-T, SP-T3800, GPWP001，URTM023- Urevo, URTM025
Model Difference	Only for different model name.The test model is ZX1.
Hardware version	V1.0
Software version	V1.0
Operation Frequency:	433.92MHz
Modulation Type:	ASK
Antenna Type:	PCB Antenna
Antenna Gain:	0dBi(Declaration by applicant)
Ratings	Transmitter: DC 3V Form Battery Receiver: AC 120V/60Hz

3.2 DESCRIPTION OF TEST MODES

For All Emission	
Final Test Mode	Description
Transmitting mode	Keep the EUT in continuously transmitting mode

Note:

(1) New battery is used during the test

3.3 BLOCK DIGRAM SHOWING THE CONFIGURATION OF SYSTEM TESTED

RE Spurious emissions

E-1
EUT

3.4 DESCRIPTION OF SUPPORT UNITS(CONDUCTED MODE)

The EUT has been tested as an independent unit together with other necessary accessories or support units. The following support units or accessories were used to form a representative test configuration during the tests.

Item	Equipment	Mfr/Brand	Model/Type No.	Series No.	Note

Item	Shielded Type	Ferrite Core	Length	Note

Note:

(1) The support equipment was authorized by Declaration of Confirmation.
(2) For detachable type I/O cable should be specified the length in cm in『Length』column.
(3) “YES” is means “shielded” “with core”; “NO” is means “unshielded” “without core”.

3.5 EQUIPMENTS LIST FOR ALL TEST ITEMS

Radiation Test equipment

Item	Equipment	Manufacturer	Type No.	Serial No.	Last calibration	Calibrated until
1	Communication Tester	Rohde & Schwarz	CMW500	100358 Firewaware: 4.43 SP4	Oct. 17, 2022	Oct. 16, 2023
2	Spectrum Analyzer	KEYSIGHT	9020A	MY55370835	Oct. 18, 2022	Oct. 17, 2023
3	Test Receiver	R&S	ESCI7	US47140102 Firewaware: 4.42 SP3	Oct. 17, 2022	Oct. 16, 2023
4	Signal Generator	HP	83630B	3844A01028	Oct. 17, 2022	Oct. 16, 2023
5	Signal Generator	IFR	2023A	202307/242	Oct. 17, 2022	Oct. 16, 2023
6	Amplifier	Agilent	8449B	4035A00116	Oct. 17, 2022	Oct. 16, 2023
7	Amplifier	HP	8447E	2945A02770	Oct. 17, 2022	Oct. 16, 2023
8	Broadband Antenna	SCHAFFNER	2774	2774	Feb.28,2022	Feb.27,2025
9	Biconical and log periodic antennas	Schwarzbeck	VULB9168	N/A	Oct. 17, 2022	Oct. 16, 2023
10	Horn Antenna	R&S	HF906	100253	Feb.28,2022	Feb.27,2025
11	Horn Antenna	Schwarzbeck	BBHA9170	00814	Feb.28,2022	Feb.27,2025
12	Horn Antenna	EM	EM-6961	6462	Feb.28,2022	Feb.27,2025
13	3m Semi-Anechoic Chamber	Chengyu Electron	9 (L)*6 (W)* 6 (H)	BSL086	Feb.28,2022	Feb.27,2025
14	Loop Antenna	ZHINAN	ZN30900C	20073	Feb.28,2022	Feb.27,2025
15	power meter	DARE	RPR3006W	15I00041SNO0	Oct. 17, 2022	Oct. 16, 2023
16	RF Control Unit	MWRFtest	Mw100	-	Feb.28,2022	Feb.27,2025
17	Test software	MWRFtest	V8310	-	-	-
18	Turntable	MF	MF-7802BS	N/A	\	\
19	Antenna tower	MF	MF-7802BS	N/A	\	\
20	Signal Generator	Agilent	N5182A	N/A	Oct. 22, 2022	Oct. 21, 2023

RF Conduction Test equipment

Item	Kind of Equipment	Manufacturer	Type No.	Serial No.	Last calibration	Calibrated until
1	Spectrum Analyzer (9kHz-26.5GHz)	KEYSIGHT	9020A	MY55370835	Oct. 17, 2022	Oct. 16, 2023
2	MWRF Power Meter Test system	MW	MW100-RPCB	N/A	Oct. 17, 2022	Oct. 16, 2023
3	D.C. Power Supply	LongWei	TPR-6405D	N/A	\	\
4	RF Software	MW	MTS8310	V2.0.0.0	\	\

4. EMC EMISSION TEST

4.1 CONDUCTED EMISSION MEASUREMENT

Test Requirement:	FCC Part15 C Section 15.207
Test Method:	ANSI C63.10:2013
Test Frequency Range:	150KHz to 30MHz
Receiver setup:	RBW=9KHz, VBW=30KHz, Sweep time=auto

4.1.1 POWER LINE CONDUCTED EMISSION LIMITS

(Frequency Range 150KHz-30MHz)

FREQUNCY (MHz)	Limit (dBuV)		Standard
	Quasi-peak	Average	
0.15 -0.5	66 - 56 *	56 - 46 *	FCC
0.50 -5.0	56.00	46.00	FCC
5.0 -30.0	60.00	50.00	FCC

Note:

(1) The tighter limit applies at the band edges.

(2) The limit of " * " marked band means the limitation decreases linearly with the logarithm of the frequency in the range.

The following table is the setting of the receiver

Receiver Parameters	Setting
Attenuation	10 dB
Start Frequency	0.15 MHz
Stop Frequency	30 MHz
IF Bandwidth	9 kHz

4.1.2 TEST PROCEDURE

a. The EUT was placed 0.8 meters from the horizontal ground plane with EUT being connected to the power mains through a line impedance stabilization network (LISN). All other support equipments powered from additional LISN(s). The LISN provide 50 Ohm/ 50uH of coupling impedance for the measuring instrument.
b. Interconnecting cables that hang closer than 40 cm to the ground plane shall be folded back and forth in the center forming a bundle 30 to 40 cm long.
c. I/O cables that are not connected to a peripheral shall be bundled in the center. The end of the cable may be terminated, if required, using the correct terminating impedance. The overall length shall not exceed 1 m.
d. LISN at least 80 cm from nearest part of EUT chassis.
e. For the actual test configuration, please refer to the related Item –EUT Test Photos.

4.1.3 DEVIATION FROM TEST STANDARD

No deviation

4.1.4 TEST SETUP

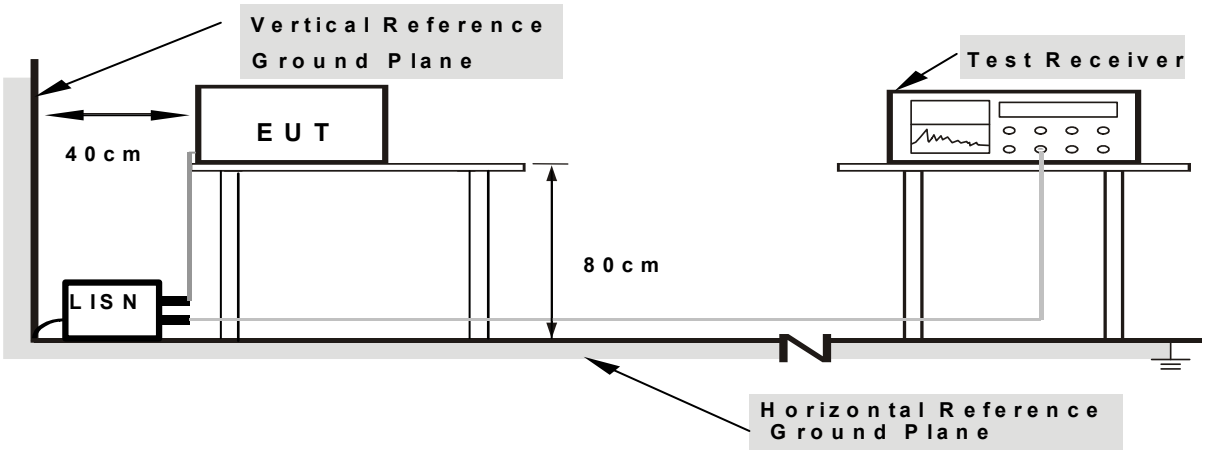

Note: 1.Support units were connected to second LISN.
2.Both of LISNs (AMN) are 80 cm from EUT and at least 80 from other units and other metal planes

4.1.5 EUT OPERATING CONDITIONS

The EUT was configured for testing in a typical fashion (as a customer would normally use it). The EUT has been programmed to continuously transmit during test. This operating condition was tested and used to collect the included data.

4.1.6 TEST RESULTS

The EUT is powered by the DC only, the test item is not applicable.

4.2 RADIATED EMISSION MEASUREMENT

Test Requirement:	FCC Part15 C Section 15.209
Test Method:	ANSI C63.10:2013
Test Frequency Range:	9kHz to 25GHz
Test site:	Measurement Distance: 3m
Receiver setup:	

Frequency	Detector	RBW	VBW	Value
9KHz-150KHz	Quasi-peak	200Hz	600Hz	Quasi-peak
150KHz-30MHz	Quasi-peak	9KHz	30KHz	Quasi-peak
30MHz-1GHz	Quasi-peak	100KHz	300KHz	Quasi-peak
Above 1GHz	Peak	1MHz	3MHz	Peak
	Peak	1MHz	10Hz	Average

4.2.1 RADIATED EMISSION LIMITS

20dBc in any 100 kHz bandwidth outside the operating frequency band. In case the emission fall within the restricted band specified on 15.205(a), then the 15.231(b) limit in the table below has to be followed.

Frequencies(MHz)	Field Strength(micorvolts/meter)	Measurement Distance(meters)
0.009~0.490	2400/F(KHz)	300
0.490~1.705	24000/F(KHz)	30
1.705~30.0	30	30
30~88	100	3
88~216	150	3
216~960	200	3
Above 960	500	3

LIMITS OF RADIATED EMISSION MEASUREMENT

FREQUENCY (MHz)	Limit (dBuV/m) (at 3M)	
	PEAK	AVERAGE
Above 1000	74	54

Notes:

(1) The limit for radiated test was performed according to FCC PART 15C.

(2) The tighter limit applies at the band edges.

(3) Emission level (dBuV/m)=20log Emission level (uV/m).

FUNDAMENTAL AND HARMONICS EMISSION LIMITS

Fundamental Frequency (MHz)	Field Strength of Fundamental (microvolts/meter)	Field Strength of Spurious Emissions (microvolts/meter)
40.66 - 40.70	2,250	225
70 - 130	1,250	125
130 - 174	1,250 to 3,750 **	125 to 375 **
174 - 260	3,750	375
260 - 470	3,750 to 12,500 **	375 to 1,250 **
Above 470	12,500	1,250

** linear interpolations

[Where F is the frequency in MHz, the formulas for calculating the maximum permitted fundamental field strengths are as follows: for the band 130-174 MHz, μV/m at 3 meters = 56.81818(F) - 6136.3636; for the band 260-470 MHz, μV/m at 3 meters = 41.6667(F) - 7083.3333. The maximum permitted unwanted emission level is 20 dB below the maximum permitted fundamental level.]

FREQUENCY RANGE OF RADIATED MEASUREMENT (For unintentional radiators)

Highest frequency generated or Upper frequency of measurement used in the device or on which the device operates or tunes (MHz)	Range (MHz)
Below 1.705	30
1.705 – 108	1000
108 – 500	2000
500 – 1000	5000
Above 1000	5th harmonic of the highest frequency or 40 GHz, whichever is lower

Spectrum Parameter	Setting
Attenuation	Auto
Start Frequency	1000 MHz
Stop Frequency	10th carrier harmonic
RBW / VBW setting	1 MHz / 1 MHz for Peak, 1 MHz / 10Hz for Average

Receiver Parameter	Setting
Attenuation	Auto
Start ~ Stop Frequency	9kHz~150kHz / RB 200Hz for QP
Start ~ Stop Frequency	150kHz~30MHz / RB 9kHz for QP
Start ~ Stop Frequency	30MHz~1000MHz / RB 120kHz for QP

4.2.2 TEST PROCEDURE

a. The measuring distance of at 3 m shall be used for measurements at frequency up to 1GHz. For frequencies above 1GHz, any suitable measuring distance may be used.
b. The EUT was placed on the top of a rotating table 0.8 meters above the ground at a 3 meter open area test site. The table was rotated 360 degrees to determine the position of the highest radiation.
c. The height of the equipment or of the substitution antenna shall be 0.8 m; above 1GHz, the height was 1.5m, the height of the test antenna shall vary between 1 m to 4 m. Both horizontal and vertical polarizations of the antenna are set to make the measurement.

d. The initial step in collecting conducted emission data is a spectrum analyzer peak detector mode pre-scanning the measurement frequency range. Significant peaks are then marked and then Quasi Peak detector mode re-measured.
e. If the Peak Mode measured value compliance with and lower than Quasi Peak Mode Limit, the EUT shall be deemed to meet QP Limits and then no additional QP Mode measurement performed.
f. For the actual test configuration, please refer to the related Item –EUT Test Photos.

Note:

Both horizontal and vertical antenna polarities were tested
and performed pretest to three orthogonal axis. The worst case was X axis and the emissions were reported

4.2.3 TEST SETUP

（A）Radiated Emission Test-Up Frequency Below 30MHz

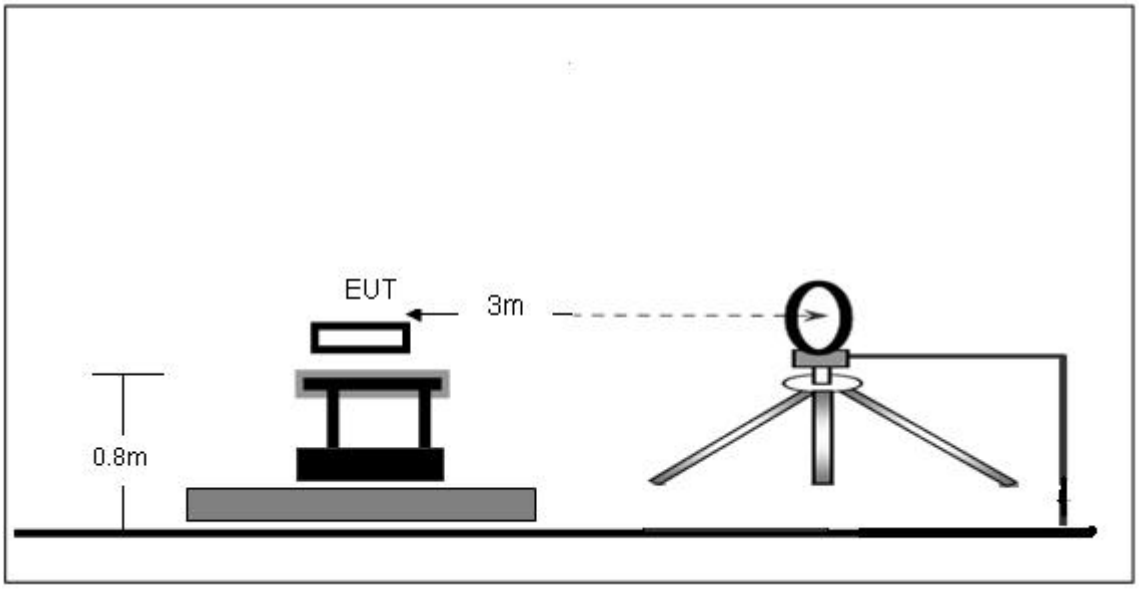

（B）Radiated Emission Test-Up Frequency 30MHz~1GHz

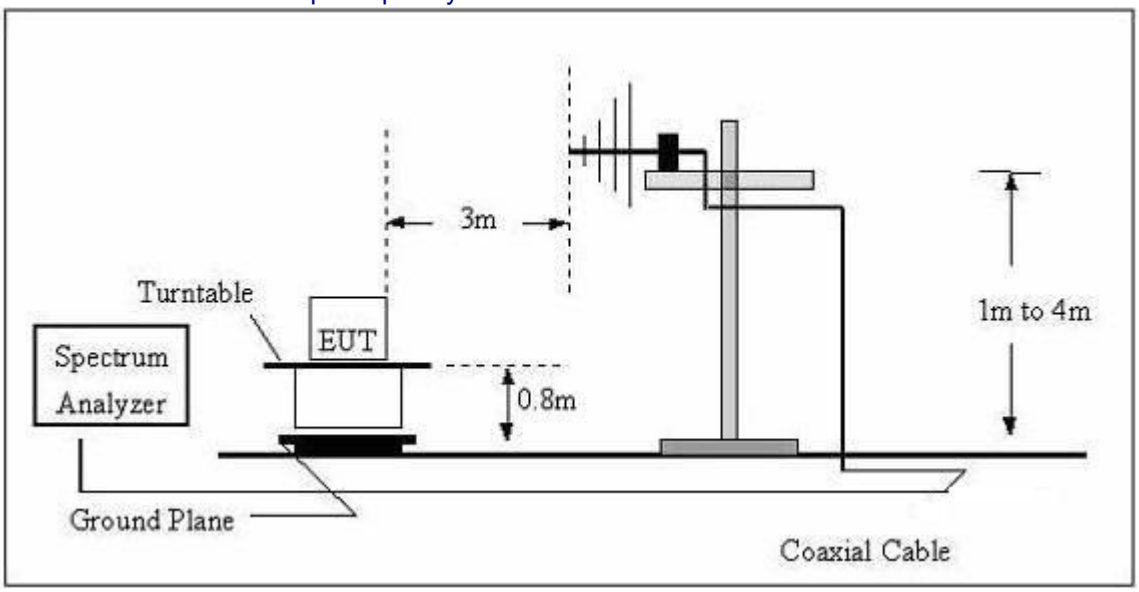

（C）Radiated Emission Test-Up Frequency Above 1GHz

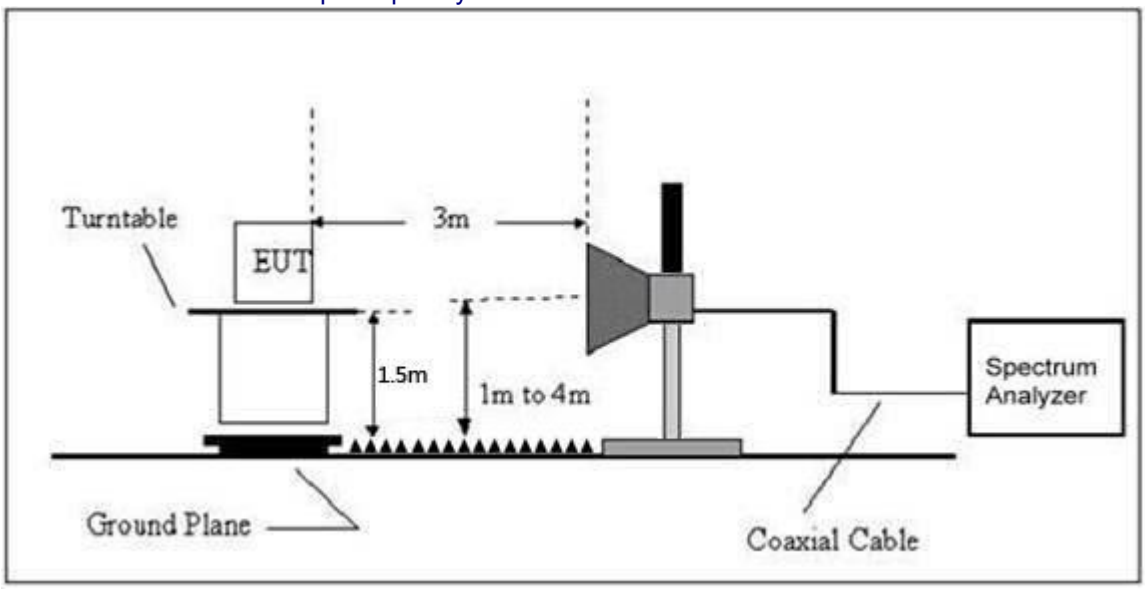

4.2.4 EUT OPERATING CONDITIONS

The EUT tested system was configured as the statements of 2.4 Unless otherwise a special operating condition is specified in the follows during the testing.

4.2.5 TEST RESULTS

Radiated Spurious Emission (Below 9KHz – 30MHz)

Temperature :	26 ℃	Relative Humidity :	54%
Pressure :	101 kPa	Polarization :	---
Test Voltage :	DC 3V		
Test Mode :	TX Mode		

Freq.	Reading	Limit	Margin	State
(MHz)	(dBuV/m)	(dBuV/m)	(dB)	P/F
--	--	--	--	PASS
--	--	--	--	PASS

NOTE:
The amplitude of spurious emissions which are attenuated by more than 20dB below the permissible value has no need to be reported.
Distance extrapolation factor =40 log (specific distance/test distance)(dB);
Limit line = specific limits(dBuv) + distance extrapolation factor.

Radiated Spurious Emission (Between 30MHz – 1GHz)

Temperature :	26 ℃	Relative Humidity :	54%
Pressure :	101 kPa	Polarization :	Horizontal
Test Voltage :	DC 3V		
Test Mode :	TX Mode		

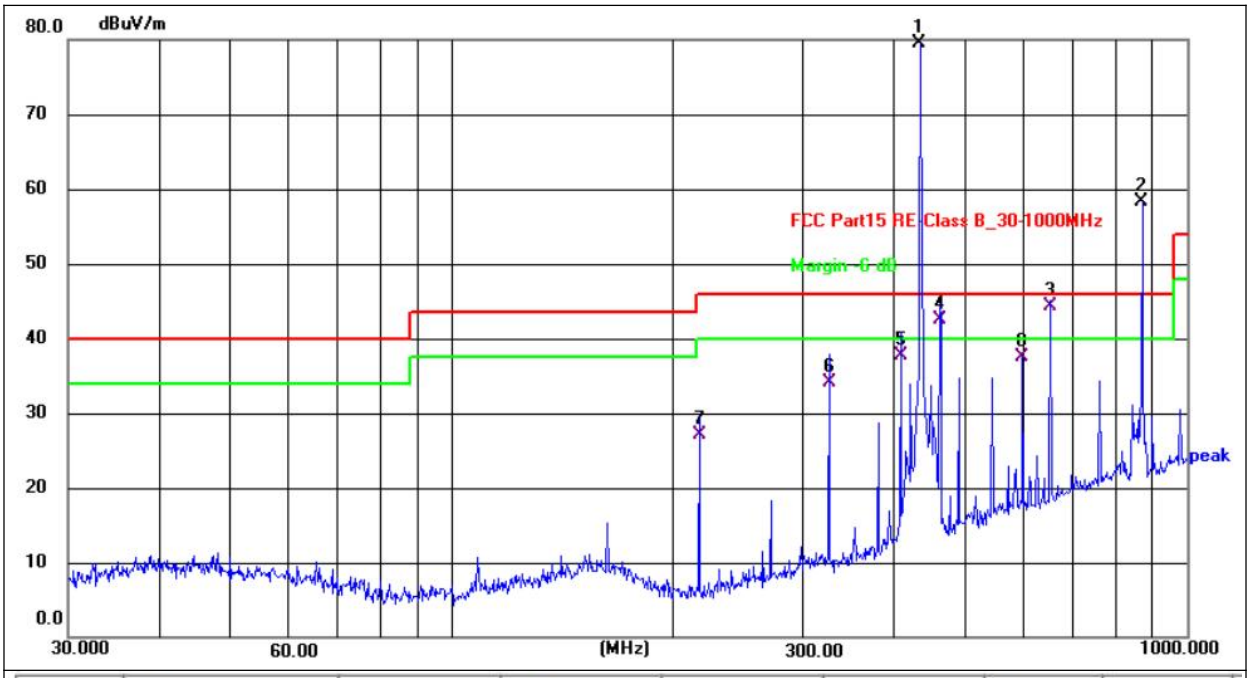

No.	Frequency (MHz)	Reading (dBuV)	Factor (dB/m)	Level (dBuV/m)	Limit (dBuV/m)	Margin (dB)	Detector
1 *	433.9200	91.78	-12.29	79.49	100.8	-21.31	peak
2 X	867.8400	62.28	-4.05	58.23	80.8	-22.57	peak
3 !	651.9417	52.01	-7.71	44.30	46.00	-1.70	QP
4 !	460.7271	54.14	-11.64	42.50	46.00	-3.50	QP
5	407.5144	50.80	-13.00	37.80	46.00	-8.20	QP
6	325.5958	49.54	-15.34	34.20	46.00	-11.80	QP
7	216.7828	46.33	-19.23	27.10	46.00	-18.90	QP
8	597.2232	46.40	-8.93	37.47	46.00	-8.53	QP

Remarks:
1.Final Level =Receiver Read level + Antenna Factor + Cable Loss – Preamplifier Factor
2.The emission levels of other frequencies are very lower than the limit and not show in test report.

Temperature :	26 ℃	Relative Humidity :	54%
Pressure :	101 kPa	Polarization :	Vertical
Test Voltage :	DC 3V		
Test Mode :	TX Mode		

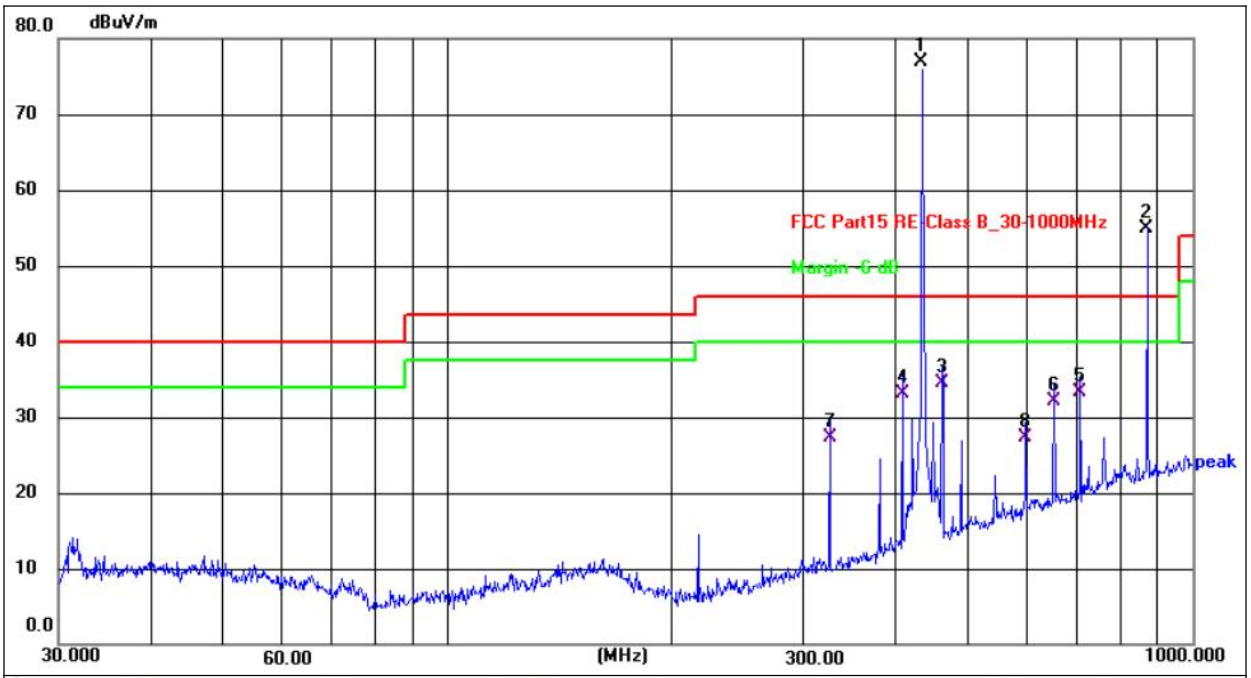

No.	Frequency (MHz)	Reading (dBuV)	Factor (dB/m)	Level (dBuV/m)	Limit (dBuV/m)	Margin (dB)	Detector
1 *	433.9200	89.19	-12.29	76.90	100.8	-23.9	peak
2 X	867.8400	58.95	-4.05	54.90	80.8	-25.9	peak
3	460.7271	46.14	-11.64	34.50	46.00	-11.50	QP
4	407.5145	46.20	-13.00	33.20	46.00	-12.80	QP
5	706.6999	39.98	-6.58	33.40	46.00	-12.60	QP
6	651.9417	39.81	-7.71	32.10	46.00	-13.90	QP
7	325.5957	42.64	-15.34	27.30	46.00	-18.70	QP
8	597.2232	36.33	-8.93	27.40	46.00	-18.60	QP

Remarks:
1.Final Level =Receiver Read level + Antenna Factor + Cable Loss – Preamplifier Factor
2.The emission levels of other frequencies are very lower than the limit and not show in test report.

For average Emission

Frequency MHz	Peak Level dBuV/m	Duty cycle factor	AverageLevel dBuV/m	Limit AV	Margin	Polarization
433.92	79.49	-7.70	71.79	80.8	-9.01	Horizontal
867.84	58.23	-7.70	50.53	60.8	-10.27	Horizontal

Notes: 1. Average emission Level = Peak Level + Duty cycle factor
2.Duty cycle level please see clause 6.

Frequency MHz	Peak Level dBuV/m	Duty cycle factor	AverageLevel dBuV/m	Limit AV	Margin	Polarization
433.92	76.9	-7.70	69.2	80.8	-11.6	Vertical
867.84	54.9	-7.70	47.2	60.8	-13.6	Vertical

Notes: 1. Average emission Level = Peak Level + Duty cycle factor
2. Duty cycle level please see clause 6.

Radiated Spurious Emission (1GHz to 10th harmonics)

Frequency	Receiver Reading	Detector	Turn table Angle	RX Antenna		Corrected Factor	Corrected Amplitude	FCC Part 15.231/209/205	
				Height	Polar			Limit	Margin
(MHz)	(dBμV)	(PK/QP/Ave)	Degree	(m)	(H/V)	(dB/m)	(dBμV/m)	(dBμV/m)	(dB)
1816.80	49.62	PK	30	1.5	H	-14.38	35.24	74.00	-38.76
1816.80	49.52	PK	135	1.7	V	-14.38	35.14	74.00	-38.86
2725.20	47.52	PK	360	1.3	H	-12.87	34.65	74.00	-39.35
2725.20	46.46	PK	152	1.5	V	-12.87	33.59	74.00	-40.41

Frequency	PK	Turn table Angle	RX Antenna		Duty cycle Factor	AV	FCC Part 15.231/209/205	
			Height	Polar			Limit	Margin
(MHz)	(dBμV/m)	Degree	(m)	(H/V)	(dB)	(dBμV/m)	(dBμV/m)	(dB)
1816.80	35.24	79	1.4	H	-7.70	27.54	54.00	-26.46
1816.80	35.14	316	1.8	V	-7.70	27.44	54.00	-26.56
2725.20	34.65	325	1.7	H	-7.70	26.95	54.00	-27.05
2725.20	33.59	159	1.8	V	-7.70	25.89	54.00	-28.11

Other emissions for frequency above 1GHz are attenuated 30dB below the limit, so it does not reported.

Notes: 1.Average emission Level = Peak Level + Duty cycle factor

2.Duty cycle level please see clause 6.

5. BANDWIDTH TEST

5.1 APPLIED PROCEDURES / LIMIT

According to FCC 15.231(c) requirement:

The bandwidth of the emission shall be no wider than 0.25% of the center frequency for devices operating between 70 MHz to 900 MHz. Those devices operating above 900 MHz, the emission spurious shall be no wider than 0.5% of the center frequency. Bandwidth is determined at the points 20 dB down from the modulated carrier.

B.W (20dBc) Limit = 0.25% * f(MHz) = 0.25% * 433.92MHz = 1.0848MHz

Spectrum Parameter	Setting
Attenuation	Auto
Span Frequency	> Measurement Bandwidth or Channel Separation
RB	1-5%OBW
VB	≥RBW
Detector	Peak
Trace	Max Hold
Sweep Time	Auto

5.2 TEST PROCEDURE

a. The EUT was directly connected to the spectrum analyzer and antenna output port as show in the block diagram below,
b. Spectrum Setting : RBW= 1-5%OBW, VBW≥ RBW, Sweep time = Auto.

5.3 DEVIATION FROM STANDARD

No deviation.

5.4 TEST SETUP

5.5 EUT OPERATION CONDITIONS

The EUT tested system was configured as the statements of 2.4 Unless otherwise a special operating condition is specified in the follows during the testing.

5.6 TEST RESULTS

Temperature：	26 ℃	Relative Humidity：	54%
Pressure：	101kPa	Test Voltage ：	DC 3V
Test Mode ：	TX Mode		

Frequency	20dB Bandwidth (kHz)	Limit (MHz)	Result
433.92MHz	3.968	1.0848	PASS

Mode 1

6. CALCULATION OF AVERAGE FACTOR

The output field strengths of specification in accordance with the FCC rules specify measurements with an average detector. During the test, a spectrum analyzer incorporating a peak detector was used. Therefore, a reduction factor can be applied to the resultant peak signal level and compared to the limit for measurement instrumentation incorporating an average detector.

The duty cycle is measured in 100 ms or the repetition cycle period, whichever is a shorter time frame. The duty cycle is measured by placing the spectrum analyzer to set zero span at 1000kHz resolution bandwidth.

Averaging factor in dB =20log (duty cycle)

The duration of one cycle =51.5ms

The duty cycle is simply the on-time divided the duration of one cycle

Duty Cycle = (1.2ms*14+0.4ms*11)/ 51.5

=21.2ms / 51.5ms

=0.412

Therefore, the averaging factor is found by 20log0.412= -7.70dB

Test plot as follows:

Note: During the 100ms, the amount of pulse and on-time of pulse are the same for every pulse train.

Cycle

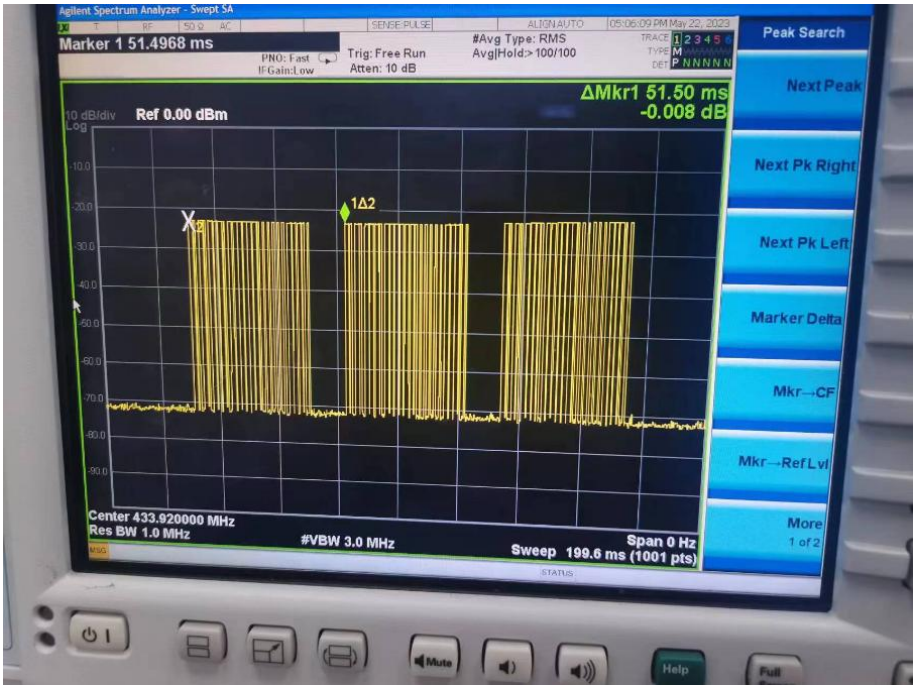

On-time 1

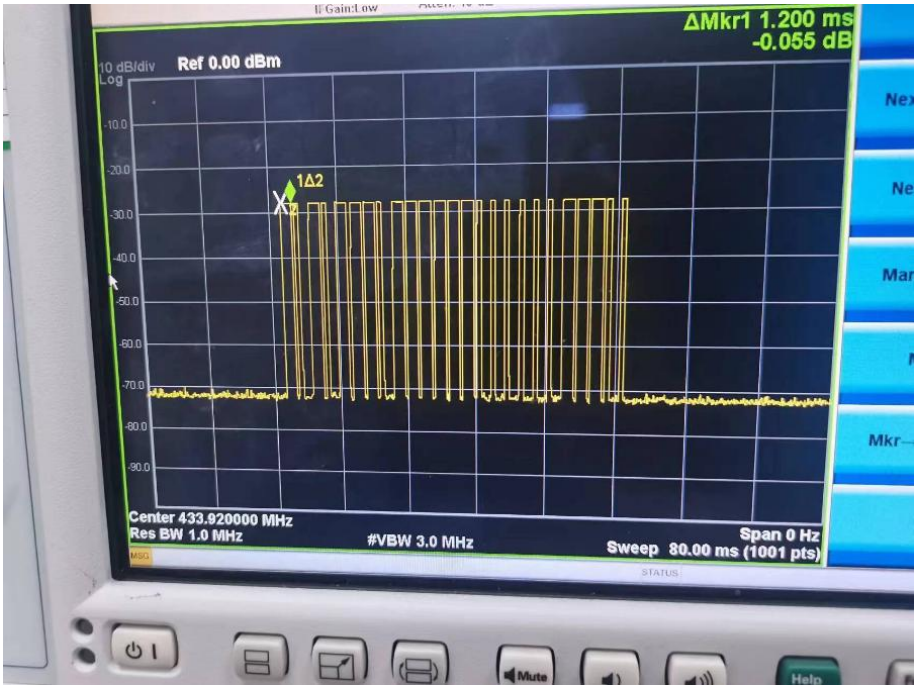

On-time 2

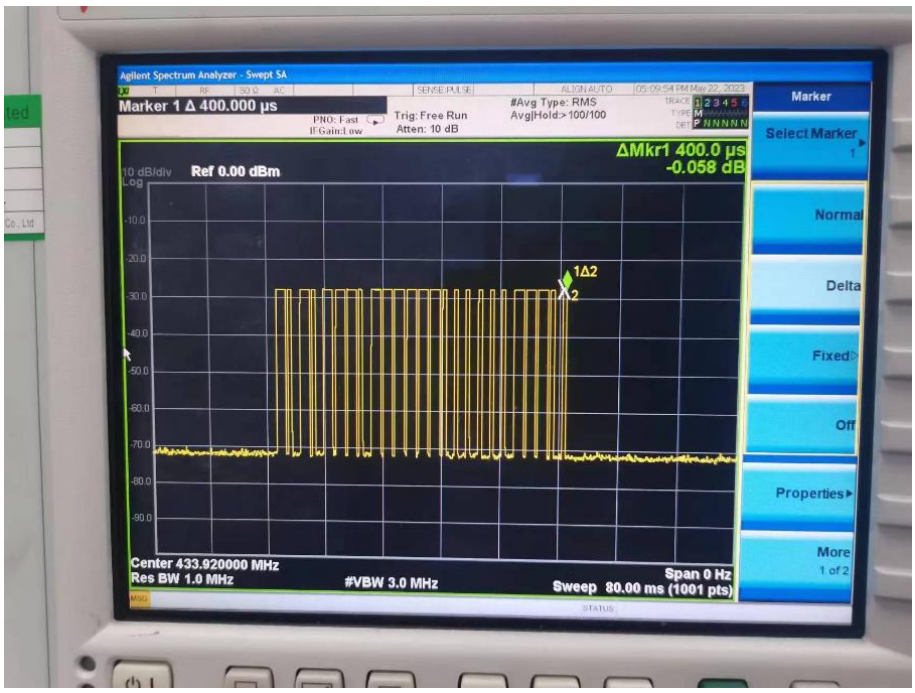

7. DWELL TIME

7.1 APPLICABLE STANDARD

According to FCC 15.231(a) requirement:

A manually operated transmitter shall employ a switch that will automatically deactivate the transmitter within not more than 5 seconds of being released.

7.2 TEST PROCEDURE

Check the calibration of the measuring instrument using either an internal calibrator or a known signal from an external generator.

1.Position the EUT without connection to measurement instrument. Turn on the EUT and connect its antenna terminal to measurement instrument via a low loss cable. Then set it to any one measured frequency within its operating range, and make sure the instrument is operated in its linear range.

2.Set RBW to 100 kHz and VBW of spectrum analyzer to 300 kHz with a convenient frequency span including 100 kHz bandwidth from band edge.

3.Measure the highest amplitude appearing on spectral display and set it as a reference level. Plot the graph with marking the highest point and edge frequency.

4.Repeat above procedures until all measured frequencies were complete.

7.3 DEVIATION FROM STANDARD

No deviation.

7.4 TEST SETUP

7.5 EUT OPERATION CONDITIONS

The EUT tested system was configured as the statements of 2.4 Unless otherwise a special operating condition is specified in the follows during the testing.

7.6 TEST RESULTS

Dwell time (second)	Limit (second)	Result
255ms	<5s	Pass

Test plot as follows:

8. ANTENNA REQUIREMENT

Standard requirement:	FCC Part15 C Section 15.203
15.203 requirement: An intentional radiator shall be designed to ensure that no antenna other than that furnished by the responsible party shall be used with the device. The use of a permanently attached antenna or of an antenna that uses a unique coupling to the intentional radiator, the manufacturer may design the unit so that a broken antenna can be replaced by the user, but the use of a standard antenna jack or electrical connector is prohibited.	
EUT Antenna:	
The antenna is PCB Antenna, the best case gain of the antennas are 0dBi, reference to the appendix II for details	

9. TEST SETUP PHOTO

Reference to the appendix I for details.

10. EUT CONSTRUCTIONAL DETAILS

Reference to the appendix II for details.

※※※※※ END OF REPORT ※※※※※