nRF9160

Hardware Integration Guide

v1.0

v1.0 / 2019-05-29

NORDIC®
SEMICONDUCTOR

Contents

Revision history . . . iii

1 About this document . . . 4

2 Device overview . . . 5

2.1 Operating conditions . . . 5
2.2 Bands of operation . . . 5
2.3 Supported FCC rules . . . 5
2.4 Host device manufacturer responsibility . . . 5

3 nRF9160 module . . . 6

3.1 Block diagram . . . 6
3.2 Pin assignment . . . 7
3.3 Pin description . . . 7

4 Antennas . . . 10

4.1 Antenna interface . . . 10
4.2 Antenna port test connector . . . 11

5 Test modes . . . 12

5.1 BB functional test . . . 12
5.2 RF functional test . . . 12
5.2.1 RX test . . . 13
5.2.2 TX test . . . 13
5.2.3 GPS SNR test . . . 14
5.3 RF signaling test . . . 15

6 Reference circuitry . . . 16

6.1 Schematics . . . 16
6.2 Bill of materials . . . 16
6.3 PCB layout . . . 16
6.4 PCB specification . . . 17
6.5 Antenna type . . . 18

7 Regulatory information . . . 20

7.1 Certified bands . . . 20
7.2 FCC/ISED regulatory notices . . . 21

Legal notices . . . 24

Revision history

Date	Version	Description
May 2019	1.0	First release

1 About this document

This document complements the nRF9160 Product Specification (PS) to provide recommendations and guidelines for designing devices based on the nRF9160 module. This document is intended for the customers of Nordic Semiconductor, especially system device manufacturers and hardware engineers.

2 Device overview

nRF9160 is an *LTE made simple* cellular IoT System in Package (SiP) module that is pre-certified for customers for building end devices on it. nRF9160 consists of an ARM® Cortex®- M33 microcontroller and 3GPP LTE release 13 compliant embedded Cat-M and Cat-NB LTE modem. The microcontroller has an inbuilt 1 MB flash memory, ARM TrustZone®, and 32 general purpose I/O pins. The LTE modem includes transceiver with global cellular band coverage, ultra-low current consumption, and single 50 Ω antenna interface.

2.1 Operating conditions

For the nRF9160 temperature range, voltage range, and physical dimensions, see nRF9160 Product Specification.

2.2 Bands of operation

For an up-to-date list of certified cellular bands, see section Regulatory certifications on the Nordic Semiconductor web page.

2.3 Supported FCC rules

The nRF9160 module has been certified to comply with the following FCC rules:

- 47 CFR Part 22
- 47 CFR Part 24
- 47 CFR Part 27
- 47 CFR Part 90
- 47 CFR part 2.1091
- FCC Part 15 Subpart B

If the device manufacturer will apply the integration and test instructions of this document to the host device, then these certifications can be applied to the host device, except for FCC Part 15 Subpart B which needs to be retested.

2.4 Host device manufacturer responsibility

Note: The nRF9160 device is only authorized for the rules listed in Supported FCC rules on page 5. The host device manufacturer is responsible for compliance to any other FCC rules that apply to the host device not covered by the nRF9160 grant of certification. It is mandatory for the host device manufacturer to assure the final device's compliance with FCC Part 15 Subpart B even if certification has been granted to nRF9160.

3 nRF9160 module

The nRF9160 SiP module consists of the nRF9160 System on Chip (SoC), power management and RF front-end section, and passive and clocking components. External to the module are supply source (battery or mains), SIM solution, and any customer peripherals and sensors. For further details of blocks and their software controls and dependencies, see nRF9160 Product Specification.

3.1 Block diagram

The following block diagram illustrates the nRF9160 SiP module.

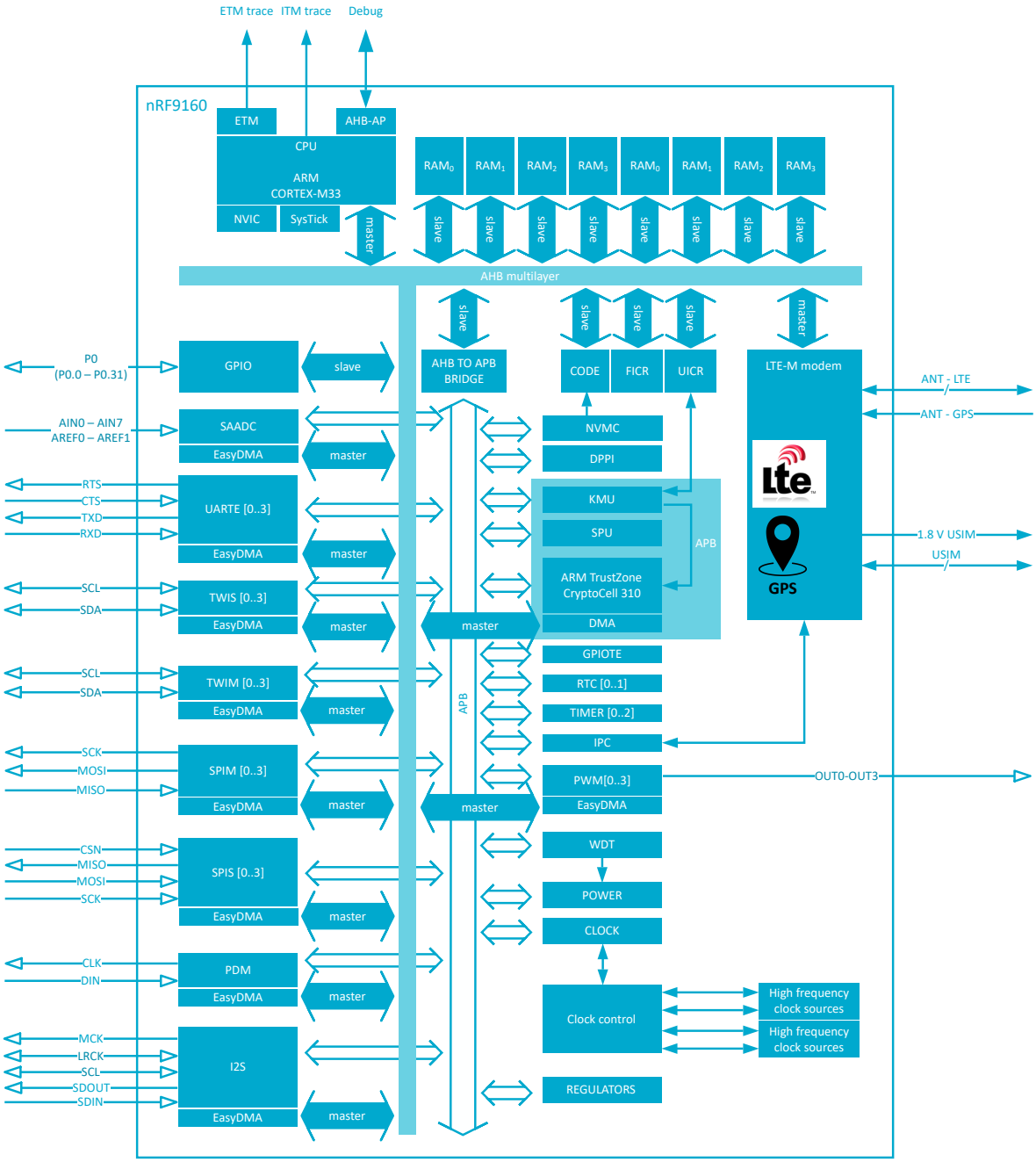

Figure 1: nRF9160 module block diagram

3.2 Pin assignment

The following figure illustrates the nRF9160 pinout. For more information, see Pin assignments in nRF9160 Product Specification.

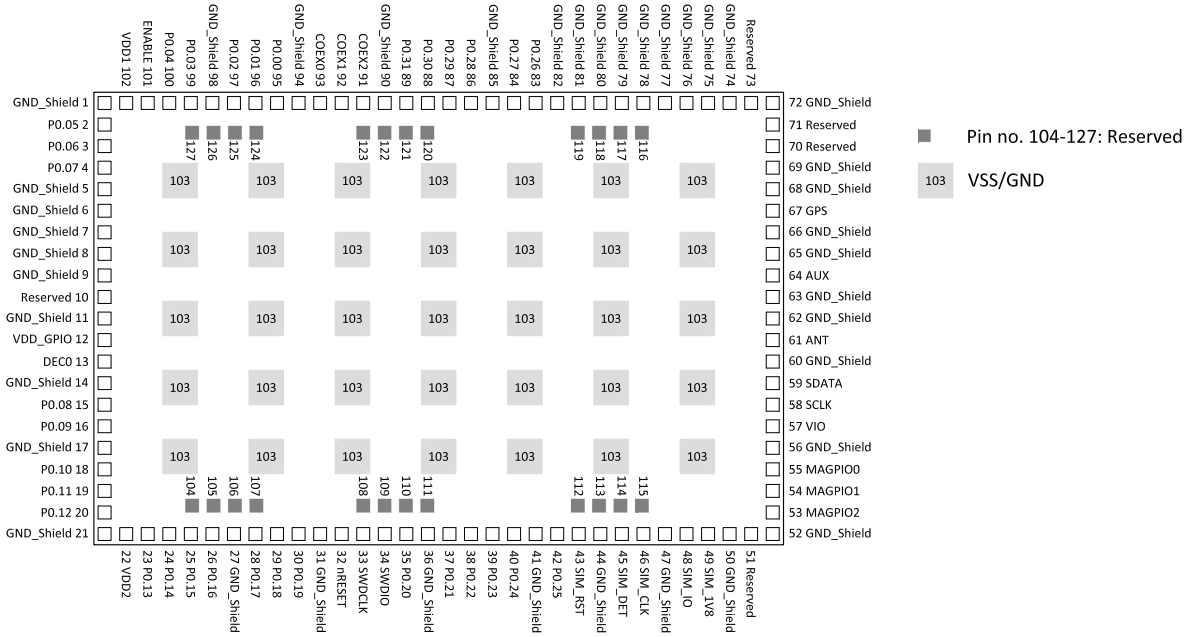

Figure 2: nRF9160 pinout, top (seen through module)

3.3 Pin description

Pin descriptions are provided in the following table. The table can be found in Pin assignments in the nRF9160 Product Specification, excluding some information that is relevant for the nRF9160 hardware design.

Pin no	Pin name	Function	Description
1	GND_Shield	Power	Microshield GND, connect strongly to module GND
2	P0.05	GPIO	Digital I/O, VDD_GPIO level
3	P0.06	GPIO	Digital I/O, VDD_GPIO level
4	P0.07	GPIO	Digital I/O, VDD_GPIO level
5-9	GND_Shield	Power	Microshield GND, connect strongly to module GND
10	Reserved		Can be used to improve mechanical rigidity. Solder to main board but do not connect electrically.
11	GND_Shield	Power	Microshield GND, connect strongly to module GND
12	VDD_GPIO	Power	GPIO power supply input and logic level for GPIOs
13	DEC0	Power	Module internal power supply decoupling option. Connect 47uF capacitor close to module.
14	GND_Shield	Power	Microshield GND, connect strongly to module GND
15	P0.08	GPIO	Digital I/O, VDD_GPIO level
16	P0.09	GPIO	Digital I/O, VDD_GPIO level
17	GND_Shield	Power	Microshield GND, connect strongly to module GND
18	P0.10	GPIO	Digital I/O, VDD_GPIO level
19	P0.11	GPIO	Digital I/O, VDD_GPIO level
20	P0.12	GPIO	Digital I/O, VDD_GPIO level
21	GND_Shield	Power	Microshield GND, connect strongly to module GND
22	VDD2	Power	RFFE power supply input. Tie to the same voltage level as VDD1.

Pin no	Pin name	Function	Description
23	P0.13	GPIO	Digital I/O and analog input, VDD_GPIO level
24	P0.14	GPIO	Digital I/O and analog input, VDD_GPIO level
25	P0.15	GPIO	Digital I/O and analog input, VDD_GPIO level
26	P0.16	GPIO	Digital I/O and analog input, VDD_GPIO level
27	GND_Shield	Power	Microshield GND, connect strongly to module GND
28	P0.17	GPIO	Digital I/O and analog input, VDD_GPIO level
29	P0.18	GPIO	Digital I/O and analog input, VDD_GPIO level
30	P0.19	GPIO	Digital I/O and analog input, VDD_GPIO level
31	GND_Shield	Power	Microshield GND, connect strongly to module GND
32	nRESET	System reset	SoC reset pin
33	SWDCLK	SWD	Serial wire debug & programming clock input
34	SWDIO	SWD	Serial wire debug & programming interface
35	P0.20	GPIO	Digital I/O and analog input, VDD_GPIO level
36	GND_Shield	Power	Microshield GND, connect strongly to module GND
37	P0.21	GPIO	Digital I/O and trace buffer clock, VDD_GPIO level
38	P0.22	GPIO	Digital I/O and trace buffer TRACEDATA[0], VDD_GPIO level
39	P0.23	GPIO	Digital I/O and analog input TRACEDATA[1], VDD_GPIO level
40	P0.24	GPIO	Digital I/O and analog input TRACEDATA[2], VDD_GPIO level
41	GND_Shield	Power	Microshield GND, connect strongly to module GND
42	P0.25	GPIO	Digital I/O and analog input TRACEDATA[3], VDD_GPIO level
43	SIM_RST	SIM	SIM reset
44	GND_Shield	Power	Microshield GND, connect strongly to module GND
45	SIM_DET	SIM	SIM detect
46	SIM_CLK	SIM	SIM clock
47	GND_Shield	Power	Microshield GND, connect strongly to module GND
48	SIM_IO	SIM	SIM data
49	SIM_1V8	SIM	1.8V power supply output for SIM
50	GND_Shield	Power	Microshield GND, connect strongly to module GND
51	Reserved	Reserved	Can be used to improve mechanical rigidity. Solder to main board but do not connect electrically.
52	GND_Shield	Power	Microshield GND, connect strongly to module GND
53	MAGPIO2	GPIO	Digital I/O, controllable by APP and MDM, fixed 1.8V
54	MAGPIO1	GPIO	Digital I/O, controllable by APP and MDM, fixed 1.8V
55	MAGPIO0	GPIO	Digital I/O, controllable by APP and MDM, fixed 1.8V
56	GND_Shield	Power	Microshield GND, connect strongly to module GND
57	VIO	RFFE ctrl	Digital I/O, MIPI RFFE VIO compatible, fixed 1.8V
58	SCLK	RFFE ctrl	Digital I/O, MIPI RFFE CLK compatible, fixed 1.8V
59	SDATA	RFFE ctrl	Digital I/O, MIPI RFFE DATA compatible, fixed 1.8V
60	GND_Shield	Power	Microshield GND, connect strongly to module GND
61	ANT	RF	Single end 50Ω LTE antenna port
62	GND_Shield	Power	Microshield GND, connect strongly to module GND
63	GND_Shield	Power	Microshield GND, connect strongly to module GND
64	AUX	RF	Single end 50Ω ANT loop-back port, external matching network recommended.
65	GND_Shield	Power	Microshield GND, connect strongly to module GND
66	GND_Shield	Power	Microshield GND, connect strongly to module GND
67	GPS	RF	Single end 50Ω GPS input port
68	GND_Shield	Power	Microshield GND, connect strongly to module GND
69	GND_Shield	Power	Microshield GND, connect strongly to module GND
70	Reserved	Reserved	Can be used to improve mechanical rigidity. Solder to main board but do not connect electrically.
71	Reserved	Reserved	Can be used to improve mechanical rigidity. Solder to main board but do not connect electrically.
72	GND_Shield	Power	Microshield GND, connect strongly to module GND

Pin no	Pin name	Function	Description
73	Reserved	Reserved	Can be used to improve mechanical rigidity. Solder to main board but do not connect electrically.
74-82	GND_Shield	Power	Microshield GND, connect strongly to module GND
83	P0.26	GPIO	Digital I/O, VDD_GPIO level
84	P0.27	GPIO	Digital I/O, VDD_GPIO level
85	GND_Shield	Power	Microshield GND, connect strongly to module GND
86	P0.28	GPIO	Digital I/O, VDD_GPIO level
87	P0.29	GPIO	Digital I/O, VDD_GPIO level
88	P0.30	GPIO	Digital I/O, VDD_GPIO level
89	P0.31	GPIO	Digital I/O, VDD_GPIO level
90	GND_Shield	Power	Microshield GND, connect strongly to module GND
91	COEX2	GPIO	Coexistence interface, VDD_GPIO level
92	COEX1	GPIO	Coexistence interface, VDD_GPIO level
93	COEX0	GPIO	Coexistence interface, VDD_GPIO level
94	GND_Shield	Power	Microshield GND, connect strongly to module GND
95	P0.00	GPIO	Digital I/O, VDD_GPIO level
96	P0.01	GPIO	Digital I/O, VDD_GPIO level
97	P0.02	GPIO	Digital I/O, VDD_GPIO level
98	GND_Shield	Power	Microshield GND, connect strongly to module GND
99	P0.03	GPIO	Digital I/O, VDD_GPIO level
100	P0.04	GPIO	Digital I/O, VDD_GPIO level
101	ENABLE	Power	Module enable signal. Connect to VDD1 to enable module.
102	VDD1	Power	SoC power supply input. Must be at same voltage level as VDD2 power supply input for RFFE.
103	VSS	Power	Module main GND, connect strongly to application board GND plane. Main thermal exit path from module to application board.
104-127	Reserved		Can be used as improvement of mechanical rigidity. Solder to main board but do not connect electrically.

Table 1: Pin assignments

4 Antennas

The nRF9160 module supports multiple cellular frequency bands as listed in Bands of operation on page 5. As the electrical size of the antenna sets fundamental limits for antenna bandwidth, it is recommended to select an antenna supporting only the operational bands of the final device and optimize the antenna performance at frequencies in question. The smaller the electrical size, the narrower the reachable bandwidth and the lower the radiation efficiency.

If wide bandwidth and small physical size is required from the final device, antenna tuners may be advantageous: antenna input matching can be optimized for the frequency of operation at a time. It is also possible to design the antenna to have tunable resonant frequency. Antenna suppliers and design houses provide solutions for size limited antennas. The nRF9160 module provides control for external antenna tuners.

Note: The nRF9160 module has been certified only with the antenna solution presented in Reference circuitry on page 16. However, it is possible to use other antenna types and models with nRF9160. Adequate testing and regulator certifications are always required from the final device regardless of antenna selection.

4.1 Antenna interface

The nRF9160 module has a single-ended 50 Ω antenna port where the antenna solution shall be connected. nRF9160 is evaluated with a 50 Ω antenna load. To ensure good overall RF performance, antenna impedance and the characteristic impedance of the transmission line (i.e. cable) connecting the antenna and antenna port must be 50 Ω. Impedance mismatch may lead to performance degradation. Typical maximum antenna of VSWR 2:1 is recommended but VSWR 3:1 can still be accepted in the final device. Respective maximum return loss values are 9.5 dB and 6.0 dB.

The length of the transmission line from the antenna to the nRF9160 antenna port should be kept as short as possible to minimize losses, as this loss is directly deteriorating the module's transmitted and received power. Additionally, low-loss matching circuit between the antenna and the nRF9160 antenna port is recommended to minimize loss caused by antenna and PCB routing mismatch. Reserving space from device manufacturer's application board for matching components (e.g. π-circuit) is recommended. This is because, for example, catalog antennas are typically tuned on reference board and differences to device mechanics may impact antenna impedance. It is also possible that device mechanics change during the development phase of the final device, and these modifications may impact antenna performance. Matching components can be used to compensate the impact of mechanics change to antenna impedance, and thus it may not be mandatory to modify the antenna itself.

The nRF9160 module has an internal ESD circuit in the antenna port, but additional ESD components at device manufacturer's application board may be used. The design of the ESD circuit shall be such that the impact on RF frequencies is negligible.

Note: ESD filtering may be necessary for some active components that can be used at antenna path. Such components can be, for example, RF switches and antenna tuners. For further ESD requirements, see the RF switch and antenna tuner datasheets.

4.2 Antenna port test connector

To run conductive RF tests, a test connector nearby the nRF9160 antenna port in the RF transmission line is needed. The 50 Ω impedance requirement applies also to the test connector, and VSWR and insertion loss should be minimal. Regardless of whether the nR9160 antenna port is connected to an actual antenna or test equipment, the load at the nRF9160 antenna should remain as close to 50 Ω as possible.

For a test connector, microwave coaxial switch connectors (for example, Murata MM8130-2600) are a good choice for this purpose. For conductive tests, a test cable is plugged in which connects the nRF9160 antenna port to the test equipment instead of the antenna. When the test cable is plugged off, the nRF9160 antenna port is connected to the antenna for real use case or radiated testing. The layout for the connector must be carefully designed to fulfil the 50 Ω requirement. For detailed guidance on this, see the coaxial switch connectors datasheets.

5 Test modes

The nRF9160 module is fully calibrated and does not require any calibration in device manufacturer's production. Instead, the manufacturer test should focus on successful assembly of the module and the peripheral components connected to nRF9160 for correct co-functionality.

Device manufacturer testing should focus on items such as the following:

- Module is not damaged during handling and assembly
- All module pins are successfully soldered (connectivity and no shorts)
- Module functionality in final product
  - Communication to module MCU
  - All interfaces between the module and the peripheral circuits
  - RF performance and antenna connection

The primary method to implement these tests is by programming FW on the application MCU that will control the chip during the test. The application MCU programming interface is defined in nRF9160 Product Specification. However, it is also possible to control the device through nRF9160 serial interface by AT commands. It requires flashing appropriate firmware in the nRF9160 exposing AT command API into physical interface. By this method nRF9160 can also be controlled not only in device production phase but also in device manufacturer development phase.

Note: For more information about RF performance related test modes and other supported test capabilities, see nRF91 AT Commands Reference Guide.

5.1 BB functional test

The nRF91 programming interface can be used to test the digital interfaces. All GPIO and application MCU peripherals are described in nRF9160 Product Specification and LTE modem related IO interfaces (MAGPIO, MIPI RFFE, SIM) are accessed through AT commands described in nRF91 AT Commands Reference Guide.

5.2 RF functional test

In this document, the focus is on RF performance testing modes and methods.

Device testing can be done either as radiated measurement or as conducted test if the device has a RF test connector. In both cases the test can be done with basic RF measurement equipment using the AT test commands that set up the module to test modes bypassing the LTE signaling protocol.

The nRF9160 transceiver supports three main test modes for RF performance verification: RX, TX, and GPS SNR test modes. A high level description of each test mode is given in the following sections.

Note: To avoid module damage during testing the nRF9160 antenna port must be terminated to either suitable antenna or 50 Ω termination.

Note: Since the AT test commands enable to emit RF power bypassing the LTE signaling protocol the emission can cause interference. This feature is thus only intended for use in controlled test environments and shall not be used during normal module operation following the instructions in Nordic Semiconductor documentation.

5.2.1 RX test

RX ON command enables the RF receiver with the given parameters. It also measures antenna power with a time domain power meter and returns the measurement result. **RX OFF** command disables RF receiver.

RX ON has a total of four input parameters:

Parameter	Range	Description
3GPP band number	1 to 66	nRF9160 supported bands
Frequency 100 kHz raster	6000 to 22000	Corresponds to 600 to 2200 MHz
System mode	0 to 1	NB1 = 0, M1 = 1
Signal level at antenna	-127 to -25	Signal generator level at antenna [dBm]

Table 2: RX ON input parameters

The response to the test is RX signal power at antenna port measured by DUT given in q8 [dBm] format. q8 format results can be converted into dBm value by dividing the result by 2^8 (= 256).

The example command enables the RF receiver for Band 1, 2140.0 MHz, −65 dBm, NB1 mode:

```
%XRFTEST=0,1,1,21400,-65,0
%XRFTEST: -17002
OK
```

Note: −17002/256 = −66.4 dBm

Figure 3: Example command

Test setup

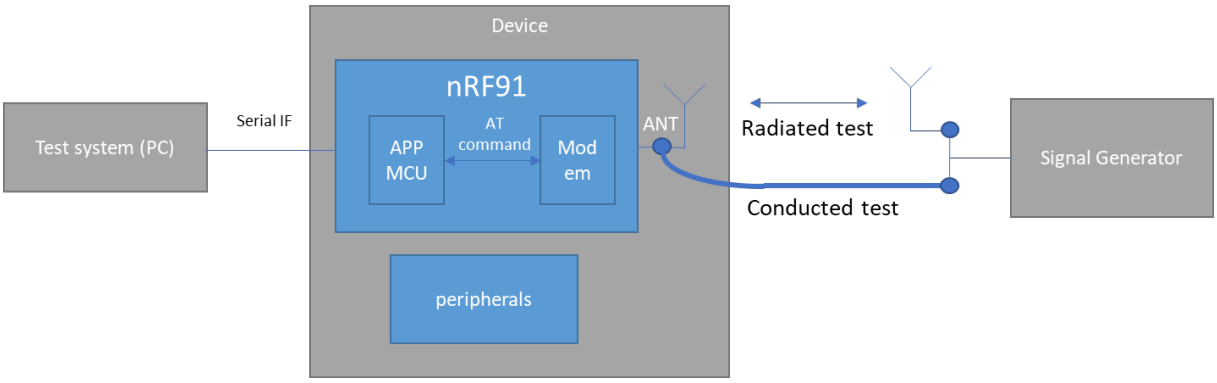

Figure 4: RX test setup example

5.2.2 TX test

TX ON command enables RF transmitter with the given parameters. It also measures TX power with an internal measurement receiver in time domain and returns the measurement result. **TX OFF** command disables RF transmitter.

TX ON has a total of seven input parameters:

Parameter	Range	Description
3GPP band number	1 to 66	nRF9160 supported bands
Frequency 100 kHz raster	6000 to 22000	Corresponds to 600 to 2200 MHz
System mode	0 to 1	NB1 = 0, M1 = 1
Signal level at antenna	-50 to +23	TX signal level at antenna port [dBm]
Modulation	CW to 16QAM	TX signal properties - options available depending on selected system mode
RB or SC count	1 to 12	TX signal properties - options available depending on selected system mode
RB or SC start position	0 to 11	TX signal properties - options available depending on selected system mode

Table 3: TX ON input parameters

The response to the test is TX signal power at antenna port measured internally by DUT. The same TX signal power can be measured with external measurement equipment connected to DUT antenna port.

The example command enables the RF transmitter for Band 5, 830.0 MHz, +18 dBm, NB1, BPSK, 12 tones:

```
%XRFTEST=1,1,5,8300,18,0,3,12,0
%XRFTEST: 271
OK
```

Note: 271/16 = 16.9 dBm

Figure 5: Example command

Test setup

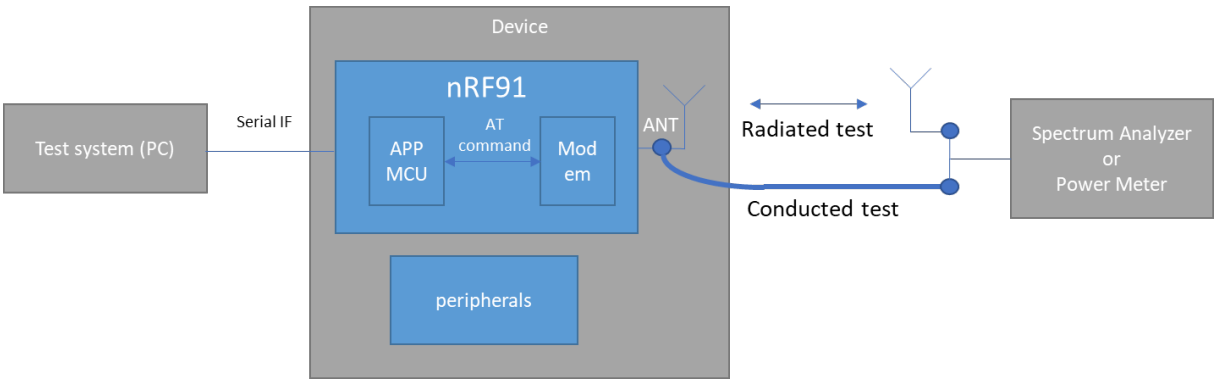

Figure 6: TX test setup example

5.2.3 GPS SNR test

`GPS SNR ON` command executes a GPS SNR test. GPS L1 frequency is 1575.42 MHz and this test expects the CW in signal generator to be 1575.750 MHz, i.e. 330 kHz offset from the center frequency. The measurement duration is 1 ms.

The test is disabled automatically after 1 ms and dedicated **`GPS SNR OFF`** command is not needed.

`GPS SNR ON` has a one input parameter:

Parameter	Range	Description
Signal level at antenna	-127 to -25	Signal generator level at antenna [dBm]

Table 4: GPS SNR ON input parameters

The response to the test is GPS SNR value measured by DUT in q4 [dB] format. q4 format results can be converted into dBm value by dividing the result by 2^4 (= 16).

Test setup

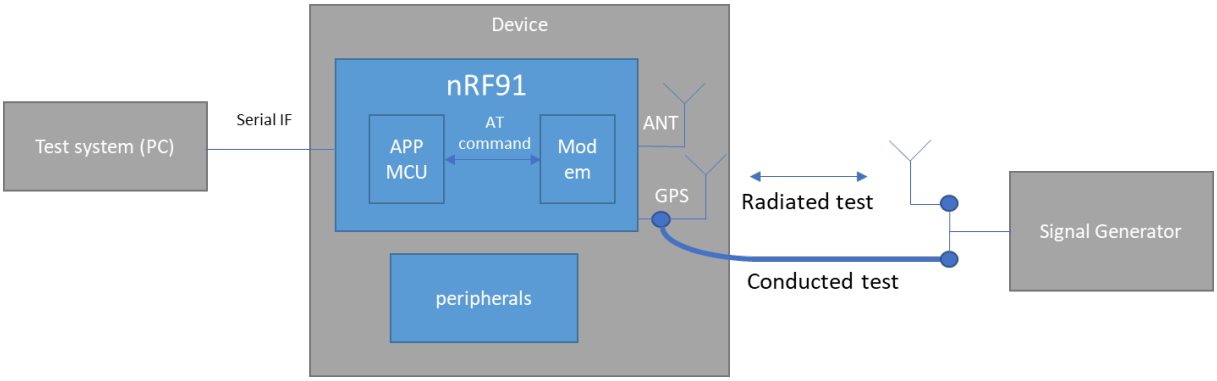

Figure 7: GPS SNR test setup example

5.3 RF signaling test

If full functionality against LTE network is tested in device manufacturing, it is possible to set up a signaling mode test either by live network test or by using a telecommunication tester.

The use of test equipment with LTE signaling capability is strongly recommended. If live network is used a network with good coverage and known signal quality is needed. Typically, it is difficult to guarantee live network quality over time and caution is needed in the interpretation of results. Live network signaling mode test is done by setting up a data connection and checking RX signal quality through AT command.

6 Reference circuitry

To ensure good RF performance when designing PCBs, it is highly recommended to use the PCB layouts and component values provided by Nordic Semiconductor.

Documentation for the different package reference circuits, including Altium Designer files, PCB layout files, and PCB production files can be downloaded from www.nordicsemi.com.

> **Note:** In this context reference circuitry illustrates the vehicle (i.e. nRF9160 Development Kit) applicable for the nRF9160 module granted the FCC certifications listed in Supported FCC rules on page 5. The given reference circuity is a valid generic example of an nRF9160 based final device but does not limit the use of nRF9160 in any way.

6.1 Schematics

The following figure illustrates the reference schematics of nRF9160 Development Kit.

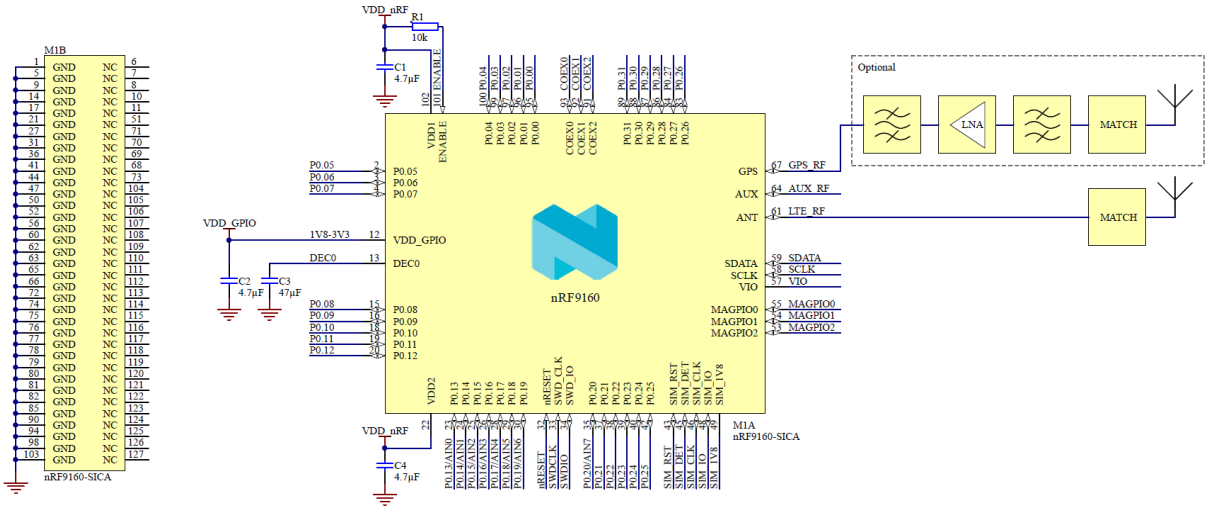

Figure 8: nRF9160 reference schematics

6.2 Bill of materials

The bill of material (BOM) is TBD.

6.3 PCB layout

The PCB layout shown in Figure 9: nRF9160 reference layout, metal layer 1 (top) on page 17 and Figure 10: nRF9160 reference layout, metal layer 2 on page 17 are part of the nRF9160 Development Kit reference layout. The figures show the PCB design details of the area where the cellular antenna is located.

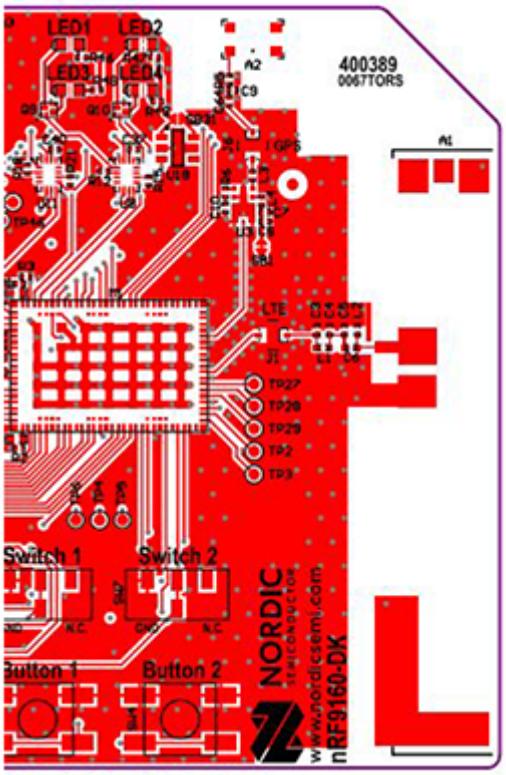

Figure 9: nRF9160 reference layout, metal layer 1 (top)

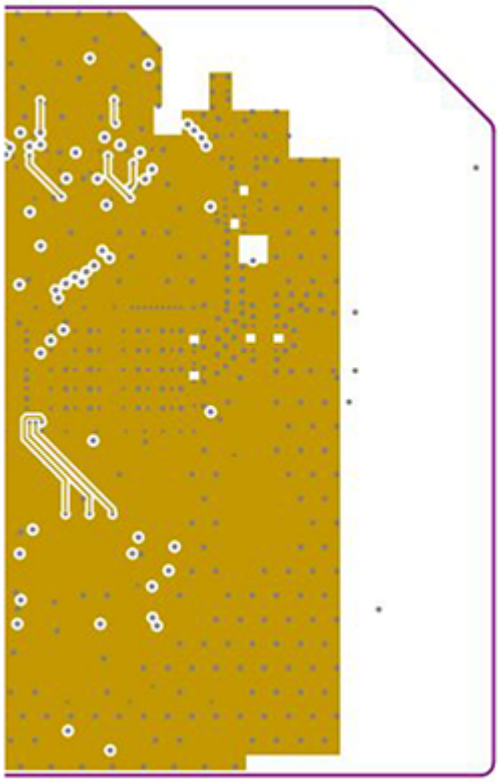

Figure 10: nRF9160 reference layout, metal layer 2

6.4 PCB specification

The nRF9160 Development Kit PCB stack-up and layer materials are shown in the following figure:

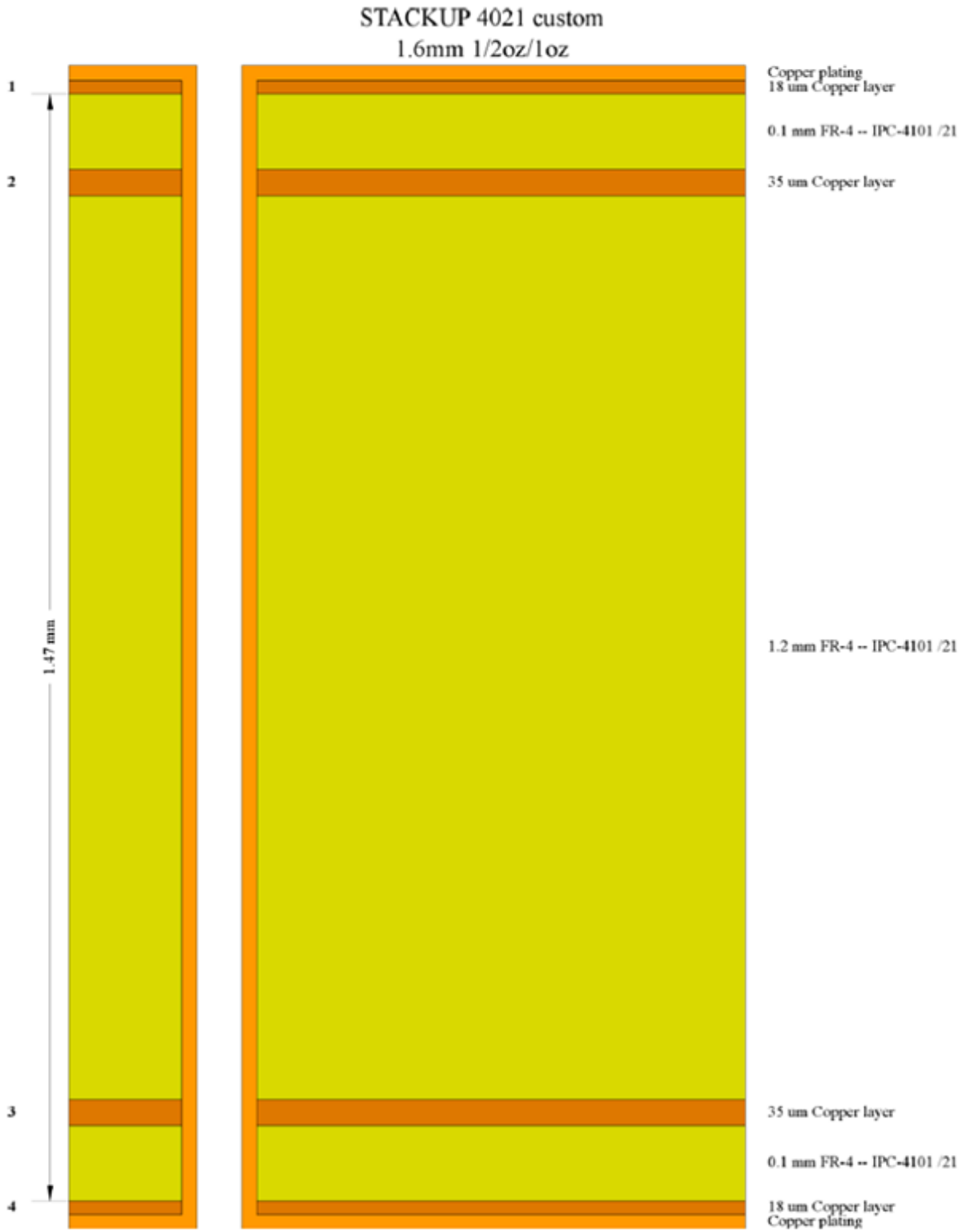

Figure 11: nRF9160 reference PCB (Elprint's 4-layer 4001 stack-up)

6.5 Antenna type

The antenna used in nRF9160 Development Kit is Ethertronics P822601 shown in the following figure. The antenna is a universal broadband FR4 embedded LTE antenna generally suitable for various cellular applications. Ethertronics' Universal Broadband Embedded LTE/LPWA antenna utilizes Isolated Magnetic Dipole™ (IMD) technology. For further details on the antenna, see the antenna supplier datasheet.

Figure 12: nRF9160 Development Kit antenna

7 Regulatory information

This section contains information on certified bands and FCC/ISED regulatory notices for nRF9160.

7.1 Certified bands

The following table shows the FCC and ISED certified LTE-M1 bands for nRF9160.

Band	FCC certification	ISED certification
Band 2	Yes	Yes
Band 4	Yes	Yes
Band 5	Yes	Yes
Band 12	Yes	Yes
Band 13	Yes	Yes
Band 14	Yes	No
Band 17	Yes	Yes
Band 25	Yes	No
Band 26	Yes	No
Band 66	Yes	Yes

Table 5: FCC and ISED certified LTE-M1 bands

The following table shows the FCC and ISED certified LTE-NB1 bands for nRF9160.

Band	FCC certification	ISED certification
Band 2	Yes	No
Band 4	Yes	Yes
Band 5	Yes	No
Band 12	Yes	Yes
Band 13	Yes	Yes
Band 17	Yes	No
Band 25	Yes	No
Band 26	Yes	No
Band 66	Yes	Yes

Table 6: FCC and ISED certified LTE-NB1 bands

For more information about the certified bands and the status of the ongoing certifications, see nRF9160 Certifications.

7.2 FCC/ISED regulatory notices

FCC/ISED regulatory notices cover modification and interference statements, wireless and FCC Class B digital device notices, permitted antennas and labeling requirements.

Modification statement

Nordic Semiconductor has not approved any changes or modifications to this device by the user. Any changes or modifications could void the user's authority to operate the equipment.

Nordic Semiconductor n'approuve aucune modification apportée à l'appareil par l'utilisateur, quelle qu'en soit la nature. Tout changement ou modification peuvent annuler le droit d'utilisation de l'appareil par l'utilisateur.

Interference statement

This device complies with Part 15 of the FCC Rules and Industry Canada's licence-exempt RSS standards. Operation is subject to the following two conditions: (1) this device may not cause interference, and (2) this device must accept any interference, including interference that may cause undesired operation of the device.

Le présent appareil est conforme aux CNR d'Industrie Canada applicables aux appareils radio exempts de licence. L'exploitation est autorisée aux deux conditions suivantes: (1) l'appareil ne doit pas produire de brouillage, et (2) l'utilisateur de l'appareil doit accepter tout brouillage radioélectrique subi, même si le brouillage est susceptible d'en compromettre le fonctionnement.

Wireless notice

This equipment complies with FCC and ISED radiation exposure limits set forth for an uncontrolled environment. The antenna should be installed and operated with minimum distance of 20 cm between the radiator and your body. This transmitter must not be co-located or operating in conjunction with any other antenna or transmitter.

Cet appareil est conforme aux limites d'exposition aux rayonnements de l'ISDE pour un environnement non contrôlé. L'antenne doit être installée de façon à garder une distance minimale de 20 centimètres entre la source de rayonnements et votre corps. L'émetteur ne doit pas être colocalisé ni fonctionner conjointement avec à autre antenne ou autre émetteur.

Permitted antenna

This radio transmitter has been approved by FCC and ISED to operate with the antenna types listed below with the maximum permissible gain indicated. Antenna types not included in this list, having a gain greater than the maximum gain indicated for that type, are strictly prohibited for use with this device.

Type	Band	Max gain
SMD	Band 2	9.0 dBi
	Band 4	6.0 dBi
	Band 5	7.1 dBi
	Band 12	6.6 dBi
	Band 13	6.9 dBi
	Band 14	6.9 dBi
	Band 17	6.6 dBi
	Band 25	9.0 dBi
	Band 26	7.0 dBi
	Band 66	6.0 dBi

Le présent émetteur radio a été approuvé par ISDE pour fonctionner avec les types d'antenne énumérés ci dessous et ayant un gain admissible maximal. Les types d'antenne non inclus dans cette liste, et dont le gain est supérieur au gain maximal indiqué, sont strictement interdits pour l'exploitation de l'émetteur.

Type	Bande	Gain maximal
CMS	Bande 2	9.0 dBi
	Bande 4	6.0 dBi
	Bande 5	7.1 dBi
	Bande 12	6.6 dBi
	Bande 13	6.9 dBi
	Bande 14	6.9 dBi
	Bande 17	6.6 dBi
	Bande 25	9.0 dBi
	Bande 26	7.0 dBi
	Bande 66	6.0 dBi

FCC Class B digital device notice

This equipment has been tested and found to comply with the limits for a Class B digital device, pursuant to Part 15 of the FCC Rules. These limits are designed to provide reasonable protection against harmful interference in a residential installation. This equipment generates, uses and can radiate radio frequency energy and, if not installed and used in accordance with the instructions, may cause harmful interference to radio communications. However, there is no guarantee that interference will not occur in a particular installation. If this equipment does cause harmful interference to radio or television reception, which can be determined by turning the equipment off and on, the user is encouraged to try to correct the interference by one or more of the following measures:

- Reorient or relocate the receiving antenna
- Increase the separation between the equipment and receiver
- Connect the equipment into an outlet on a circuit different from that to which the receiver is connected

- Consult the dealer or an experienced radio/TV technician for help

CAN ICES-3 (B)/NMB-3 (B)

This Class B digital apparatus complies with Canadian ICES-003.

Cet appareil numérique de classe B est conforme à la norme canadienne ICES-003.

Labeling requirements for the host device

The host device shall be properly labelled to identify the modules within the host device. The certification label of the module shall be clearly visible at all times when installed in the host device, otherwise the host device must be labelled to display the FCC ID and IC of the module, preceded by the words "Contains transmitter module", or the word "Contains", or similar wording expressing the same meaning, as follows:

Contains FCC ID: 2ANPO00NRF9160
Contains IC: 24529-NRF9160

L'équipement hôte doit être correctement étiqueté pour identifier les modules dans l'équipement. L'étiquette de certification du module doit être clairement visible en tout temps lorsqu'il est installé dans l'hôte, l'équipement hôte doit être étiqueté pour afficher le FCC ID et IC du module, précédé des mots "Contient le module émetteur", ou le mot "Contient", ou un libellé similaire exprimant la même signification, comme suit:

Contient FCC ID: 2ANPO00NRF9160
Contient IC: 24529-NRF9160

Legal notices

By using this documentation you agree to our terms and conditions of use. Nordic Semiconductor may change these terms and conditions at any time without notice.

Liability disclaimer

Nordic Semiconductor ASA reserves the right to make changes without further notice to the product to improve reliability, function, or design. Nordic Semiconductor ASA does not assume any liability arising out of the application or use of any product or circuits described herein.

Nordic Semiconductor ASA does not give any representations or warranties, expressed or implied, as to the accuracy or completeness of such information and shall have no liability for the consequences of use of such information. If there are any discrepancies, ambiguities or conflicts in Nordic Semiconductor's documentation, the Product Specification prevails.

Nordic Semiconductor ASA reserves the right to make corrections, enhancements, and other changes to this document without notice.

Life support applications

Nordic Semiconductor products are not designed for use in life support appliances, devices, or systems where malfunction of these products can reasonably be expected to result in personal injury.

Nordic Semiconductor ASA customers using or selling these products for use in such applications do so at their own risk and agree to fully indemnify Nordic Semiconductor ASA for any damages resulting from such improper use or sale.

RoHS and REACH statement

Nordic Semiconductor products meet the requirements of *Directive 2011/65/EU of the European Parliament and of the Council* on the Restriction of Hazardous Substances (RoHS 2) and the requirements of the *REACH* regulation (EC 1907/2006) on Registration, Evaluation, Authorization and Restriction of Chemicals.

The SVHC (Substances of Very High Concern) candidate list is continually being updated. Complete hazardous substance reports, material composition reports and latest version of Nordic's REACH statement can be found on our website www.nordicsemi.com.

Trademarks

All trademarks, service marks, trade names, product names, and logos appearing in this documentation are the property of their respective owners.

Copyright notice

© 2019 Nordic Semiconductor ASA. All rights are reserved. Reproduction in whole or in part is prohibited without the prior written permission of the copyright holder.

COMPANY WITH
QUALITY SYSTEM
CERTIFIED BY DNV GL
= ISO 9001 =