COMMON SOM USER MANUAL

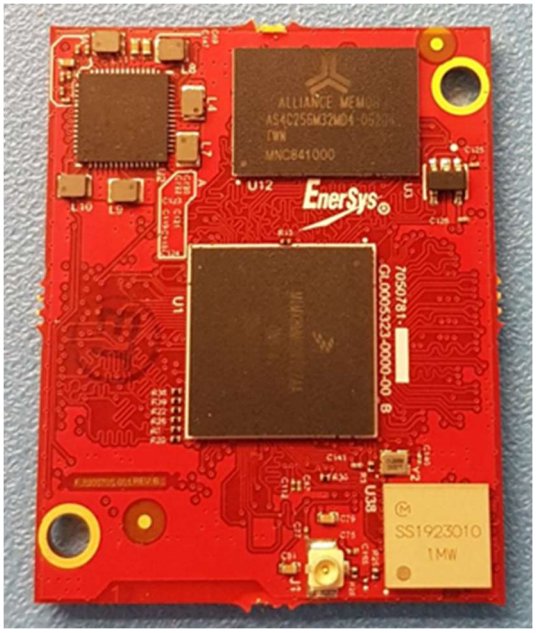

Copyright © 2024 Enersys. All Rights Reserved.

TABLE OF CONTENTS

Introduction....4
Documentation & References....4
Statement of Foreseen Use....5
Population Options / Variants....5
Connectors....5
Wireless....8
EMC – Radiated Emissions....10
Intentional Radiator Certification....11
Labelling and User Manual Requirements:....13
Reference Documents:....14

Copyright © 2023 Enersys. All Rights Reserved.

REVISION HISTORY

Version	Date	Author	Description
1.0	20 Oct 2023	Frank Van Hooft	Initial revision
2.0	3 Jan 2024	Colin Soutar	Updates for clarity, condensing.
2.1	9 Jan 2024	Colin Soutar	Add French Language Statement

Copyright © 2023 Enersys. All Rights Reserved.

INTRODUCTION

The Common SOM is a small circuit board designed to be integrated into end equipment. It is not a piece of end equipment by itself – it's not something that an end user would ever see or handle. Hence this user manual is oriented towards a product designer who would be integrating the SOM into an end product.

The Common SOM is built around an iMX8 "Mini" processor from NXP, containing a quad-core A53 core, along with DDR4 DRAM and eMMC flash memory, and a WiFi/Bluetooth module.

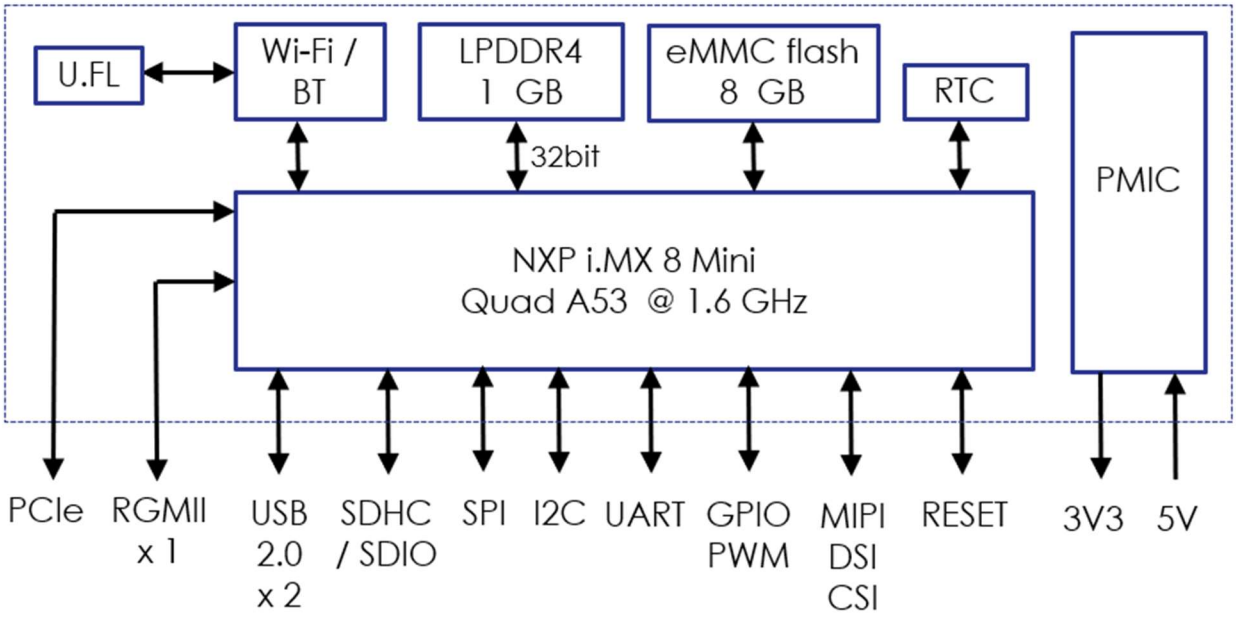

The philosophy is to make available as many of the processor ports as possible. This maximizes flexibility of use for the SOM on the carrier board, as well as reducing SOM cost by minimizing the number of extraneous components on the SOM.

DOCUMENTATION & REFERENCES

This document can only provide high-level information on the circuit. By comparison, the Reference Manual for the iMX8 Mini is close to 4000 pages long! Hence this document must refer to other sources. Some important ones:

- i.MX 8M Mini Applications Processor Reference Manual. Also known as "the reference manual".
- i.MX 8M Mini Applications Processor Datasheet. Also known as "the datasheet".
- The SOM schematic

Copyright © 2023 Enersys. All Rights Reserved.

Statement of Foreseen Use

The common SOM contains a Bluetooth/WiFi radio module implementation (called the HP 2 Radio) and is intended to be incorporated into selected EnerSys/Alpha Technologies Ltd. equipment ONLY. This SOM device with HP 2 Radio module will never be marketed or sold as a standalone product.

The HP 2 Radio module has been certified by the FCC and ISED for use as described here and also in the “Common SOM Theory of Operation” document needed to be able to utilize the SOM device with radio module. Please see sections below in the document for User Manual and documentation requirements for any incorporated devices.

Population Options / Variants

There is only one build option of the common SOM.

Connectors

The SOM is populated with two Hirose DF40C-70DP-0.4V(51) connectors.

Example suitable mating connectors for the carrier board would be:

Hirose DF40C-70DS-0.4V(51)

Hirose DF40HC(3.0)-70DS-0.4V(51)

And similar variants. The connector on the carrier board defines the connector stacking height.

Copyright © 2023 Enersys. All Rights Reserved.

●Receptacle

DF40 # - (**) - * DS - 0.4 V (**)

❶ ❷ ❸ ❹ ❺ ❻ ❼ ❽

❶ Series Name: DF40	❸ Stacking height	❹ No. of Contacts
❷ Style B : With reinforcing metal fitting HB : With reinforcing metal fitting (The H denotes a stacking height 2.5mm or above) C : Without reinforcing metal fitting HC : Without reinforcing metal fitting (The H denotes a stacking height 2.5mm or above)		❺ Connector Type DS : Double row receptacle ❻ Contact Pitch : 0.4mm ❼ Mating direction Shape V : Vertical SMT ❽ Packaging Type (51) Embossed tape packaging

Display	Stacking height
None	1.5mm
2.0	2.0mm
2.5	2.5mm
3.0	3.0mm
3.5	3.5mm
4.0	4.0mm

●Header

DF40 # - * DP - 0.4 V (**)

❶ ❷ ❸ ❹ ❺ ❻ ❼

❶ Series Name : DF40	❸ No. of Contacts	❺ Contact Pitch : 0.4mm
❷ Style C : Without reinforcing metal fitting	❹ Connector Type DP : Double row pin header	❻ Mating direction V : Vertical SMT ❼ Packaging Type (51) Embossed tape packaging

Note that the Hirose shielded connectors (the DF40GB family) do not mate with the above listed unshielded connectors. The pinout for the two connectors, J2 and J4, is:

Copyright © 2023 Enersys. All Rights Reserved.

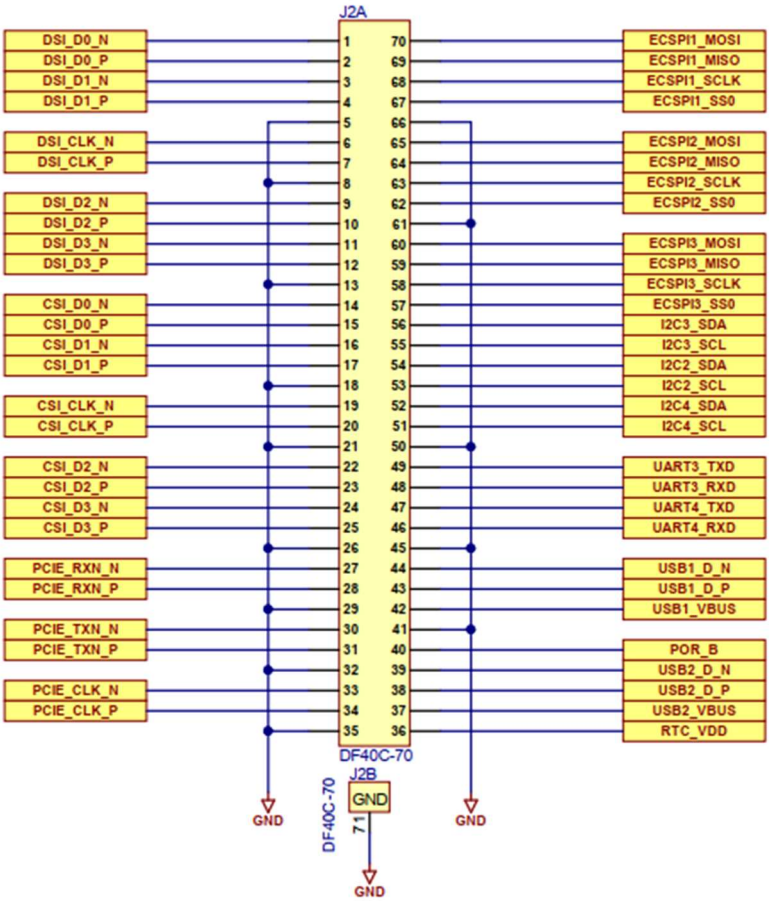

Copyright © 2023 Enersys. All Rights Reserved.

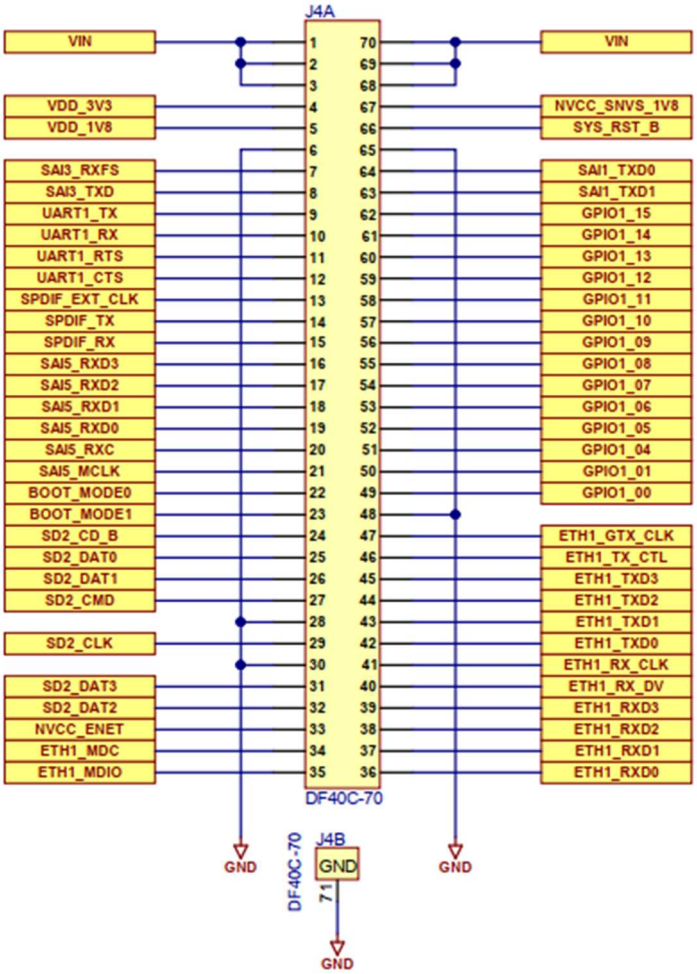

WIRELESS

The SOM contains a Murata LBEE5HY1MW module, connected via ports SD3 and UART2, plus some GPIO pins. To quote from the Murata description:

> *Type 1MW is a small and very high performance module based on Infineon CYW43455 combo chipset which supports Wi-Fi® 802.11a/b/g/n/ac + Bluetooth® 5.0 BR/EDR/LE up to 433Mbps PHY data rate on Wi-fi® and 3Mbps PHY data rate on Bluetooth®. The WLAN section supports SDIO v3.0 DDR50 interface and the Bluetooth® section supports high-speed 4-wire UART interface and PCM for audio data.*
>
> *The CYW43455 implements highly sophisticated enhanced collaborative coexistence hardware mechanisms and algorithms, which ensure that WLAN and Bluetooth® collaboration is optimized for maximum performance.*
>
> *In IEEE 802.11ac mode, the WLAN operation supports rates of MCS0 - MSC9 (up to 256 QAM) in 20MHz, 40MHz and 80MHz channels for data rate up to 433Mbps.*

Copyright © 2023 Enersys. All Rights Reserved.

The module supports both 2.4 and 5 GHz WiFi. Only 2.4 GHz is certified and supported by Enersys, due to the additional certification cost for the 5 GHz band, and the lack of any use cases for 5 GHz functionality. The 5 GHz band is disabled. See the Intentional Radiator section for further details.

The interface to the iMX8 is shown below:

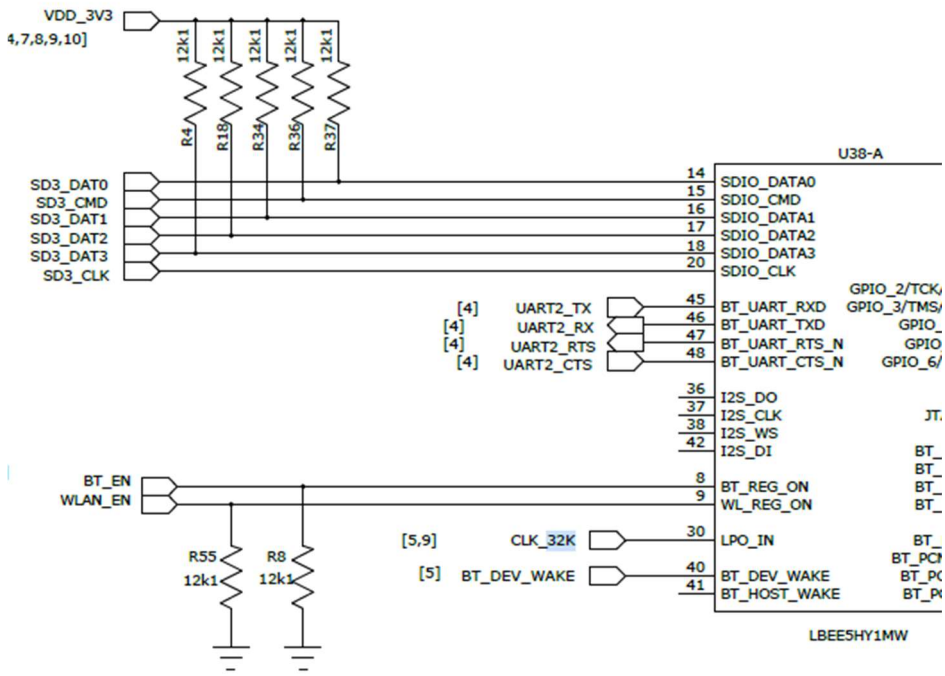

Note the signals labeled BT_EN, WLAN_EN and BT_DEV_WAKE. These are GPIO pins from the iMX8, inputs on the module, and must be configured correctly (driven high) for the Murata module to work. The pins are:

Signal	GPIO
BT_EN	NAND_READY_B = GPIO3_16
WLAN_EN	NAND_RE_B = GPIO3_15
BT_DEV_WAKE	NAND_CE3_B = GPIO3_04

The SOM has a U.FL connector on it, for supporting an external antenna. There is no antenna inbuilt on the SOM.

Copyright © 2023 Enersys. All Rights Reserved.

EMC – Radiated Emissions

The SOM contains signals running at a wide range of frequencies, with fundamentals going past 1 GHz. As such, radiated emissions is a concern. Although the CPU clock is the highest frequency (outside of wireless), the most troublesome signals likely belong to the RGMII interface. This interface runs at 125 MHz, and it is typically connected to an ethernet PHY or switch on the carrier board. Due to the length of those PCB traces, it can cause radiated EMC problems. Keeping those traces short – placing the PHY or switch as close as possible to the SOM connectors – is important. Remember those traces are impedance controlled – 50 ohms to GND. Placing 10 ohm series resistors in the TXC and RXC signals can also help.

Another EMC concern is a metal heatsink. Typically the SOM will be mounted to allow the processor to press against a metal surface with a thermal pad. The metal is in close proximity to the SOM, and will receive RF energy radiated from the SOM. This in turn will induce RF currents in the metal, and the metal will then radiate that energy. Hence the heatsink becomes a transmitting antenna for the SOM. In testing, it has been found the SOM alone passes FCC class B radiated emissions, but when an uncontrolled heatsink is used, the assembly fails Class B.

Providing an RF path from the heatsink back to the GND of the SOM is required. A good description of the problem can be found here:

https://ewh.ieee.org/r6/scv/emc/archive/032010Radu.pdf

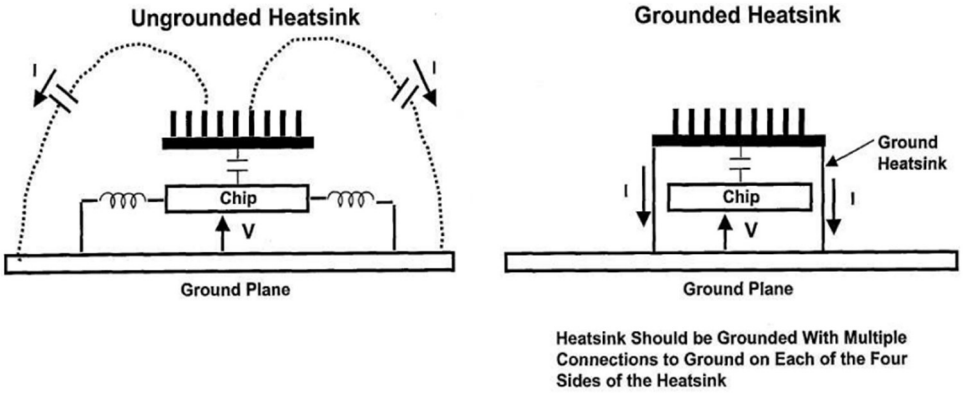

Spring fingers on the carrier board can accomplish this. In the model below, the SOM is blue, the carrier board is red, and the gray spring fingers can be seen. They reach up to touch the heatsink. Each spring finger is connected to SOM ground via a 10nF capacitor. (For clarity the thermal pad on the SOM is not shown.)

Copyright © 2023 Enersys. All Rights Reserved.

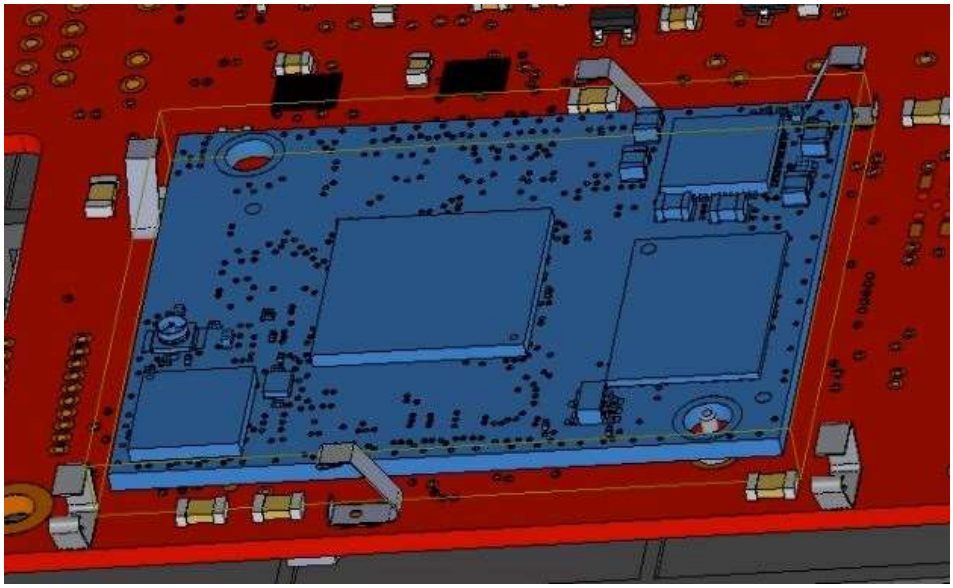

The above diagram shows 6 spring fingers – less is usually sufficient, but needs to be confirmed experimentally, as each product and carrier board is different. This type of arrangement has been demonstrated to pass Class B radiated emissions.

If the wireless module is used, it is **critical** the wireless cable (from the SOM's U.FL connector to the antenna) routes straight out away from the SOM PCB. Do not permit the wireless cable to sit across the SOM PCB under any circumstances. There are a lot of high-speed signals on the SOM board – if the wireless cable sits on the SOM PCB at all, it will pick up some of these signals and broadcast them out the wireless antenna, resulting in EMC problems.

Intentional Radiator Certification

The SOM has been subjected to rigorous Intentional Radiator testing and certification for FCC, IC (Industry Canada), and CE. For the following configuration:

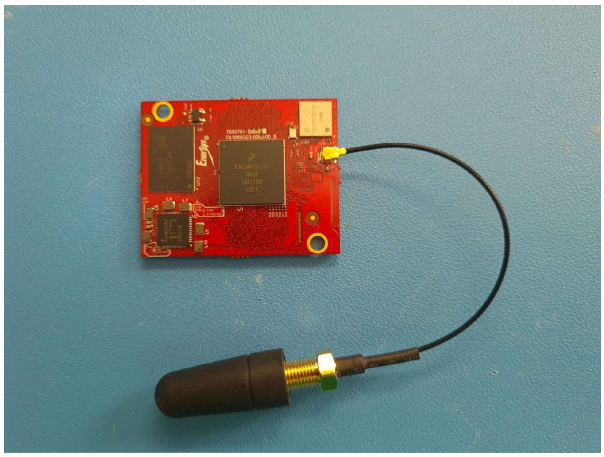

Copyright © 2023 Enersys. All Rights Reserved.

- Antenna: Abracon PRO-EX-347
- Cable: Taoglas CAB.011
- Standards: Bluetooth, BLE, WiFi
- Frequency: 2.4 GHz

Note that 5 GHz was not tested as part of this certification. This testing was performed as a “modular certification”, to permit the SOM and the above approved antenna & cable to be installed in multiple different end products. With the intent that this intentional radiator certification could be used for CXC-HP controllers, battery chargers, etc. Any product that contains the SOM.

Usage is limited to 2.4 GHz by the following two methods, one hardware and one software:

1. The Abracon PRO-EX-347 antenna used in the certification testing, and supplied with final products, only functions at 2.4 GHz. This is clearly stated in the antenna datasheet, and has also been confirmed with empirical testing.

2. The NVRAM configuration file for the module has been edited to disable the 5 GHz band. This was performed by changing the line "devid=0x43ab" to "devid=0x43ac". This file is buried within the Linux OS and is not accessible to the user.

Note this certification is only for the intentional radiator, ie the wireless module. Normal FCC / CE product testing, for unintentional radiators, etc, must still be performed for the end product. Reference the standard:

ETSI EN 301 489-1 V2.2.3 ElectroMagnetic Compatibility (EMC) standard for radio equipment and services; Part 1: Common technical requirements; Harmonised Standard for ElectroMagnetic Compatibility

It is also required to perform some intentional radiator spot tests at the assembled product level, to ensure the WiFi transmitter is not interfering with anything in the product, resulting in any spurious harmonics, etc.

Reference the EMC Test Plan from the original certification effort. This contains all the information needed to generate an accurate EMC Test Plan for any devices that will contain the SOM device with radio module.

Copyright © 2023 Enersys. All Rights Reserved.

LABELLING AND USER MANUAL REQUIREMENTS:

FCC CFR Title 47 Part 15:

Clause 2.1074

(a) Devices subject only to Supplier's Declaration of Conformity shall be uniquely identified by the party responsible for marketing or importing the equipment within the United States. However, the identification shall not be of a format which could be confused with the FCC Identifier required on certified equipment. The responsible party shall maintain adequate identification records to facilitate positive identification for each device.

(b) Devices subject to authorization under Supplier's Declaration of Conformity may be labeled with the following logo on a voluntary basis as a visual indication that the product complies with the applicable FCC requirements. The use of the logo on the device does not alleviate the requirement to provide the compliance information required by § 2.1077.

Clause 15.19 Labeling Requirements

This device complies with part 15 of the FCC Rules and with Industry Canada RSS-247 RSS standard(s). Operation is subject to the following two conditions:

(1) This device may not cause harmful interference, and

(2) this device must accept any interference received, including interference that may cause undesired operation.

Cet appareil est conforme à la spécification RSS-247 d'Industry Canada. Son fonctionnement est soumis aux deux conditions suivantes:

(1) cet appareil ne peut engendrer aucune interférence et

(2) il doit accepter toute interférence qu'il reçoit, y compris celles qui peuvent altérer son fonctionnement

NOTE: THE MANUFACTURER IS NOT RESPONSIBLE FOR ANY RADIO OR TV INTERFERENCE CAUSED BY UNAUTHORIZED MODIFICATIONS TO THIS EQUIPMENT SUCH MODIFICATIONS COULD VOID THE USER'S AUTHORITY TO OPERATE THE EQUIPMENT.

See also KDB Publication 784748 for e-labeling guidance.

15.21 Information to user (Users Manual or Instruction Manual).

The Users Manual or instruction manual for an intentional or unintentional radiator shall caution the user that Changes or modifications not expressly approved by the party responsible for compliance could void the user's authority to operate the equipment. In cases where the manual is provided only in a form other than paper, such as on a computer disk or over the Internet, the information required by this section may be included in the manual in that alternative form, provided the user can reasonably be expected to have the capability to access information in that form.

FCC ID: 2BA9E-GL0005322

Copyright © 2023 Enersys. All Rights Reserved.

Innovation, Science and Economic Development Canada (ISED):

PMN: HP 2 Radio

Clause 5.3 ICES-Gen Issue 1: July 2018 General Requirements for Compliance of Interference-Causing Equipment

Clause 4: RSS-Gen Issue 5: April 2018 General Requirements for Compliance of Radio Apparatus

Labeling and User Manual Requirements:

CAN ICES-00x (y) / NMB-00x (y)

Where x is the number of the applicable ICES standard; and

y is either “A” or “B”, but not both, to identify the applicable Class of the equipment.

Example: Canada ICES-003 (A) / NMB-003 (A)

RSP-100 Section 3:

The manufacturer, importer or distributor shall meet the labelling reqirements set out in this section for every unit:

1) prior to marketing in Canada
2) prior to importation into Canada, for imported products

For information regarding the e-labeling option, see Notice 2014-DRS1003. The label for the certified product represents the manufacturer’s or importer’s compliance with Innovation, Science and Economic Development Canada’s (ISED) regulatory requirements.

ISED Certification Number (IC): 30668-GL0005322

Any EnerSys/Alpha Technologies Ltd. Equipment that this SOM device with radio module is installed in must have the following:

Any product containing the SOM and using the wireless needs to have the following label placed on the product, and in the final product manual:

CONTAINS RADIO MODULE

FCC: 2BA9E-GL0005322
IC: 30668-GL0005322

REFERENCE DOCUMENTS:

Common SOM Theory of Operation.docx

EMC Test Plan IR BTWiFi.docx editable document.

Final version of the Test Plan: EMC Test Plan IR BTWiFiV8.pdf

Copyright © 2023 Enersys. All Rights Reserved.