宽度 90mm　高度 135mm　圆角 5mm

QUICK USER CARD

PZH -X03

TRAINING OPERATION

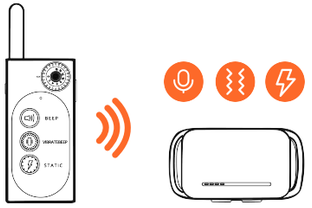

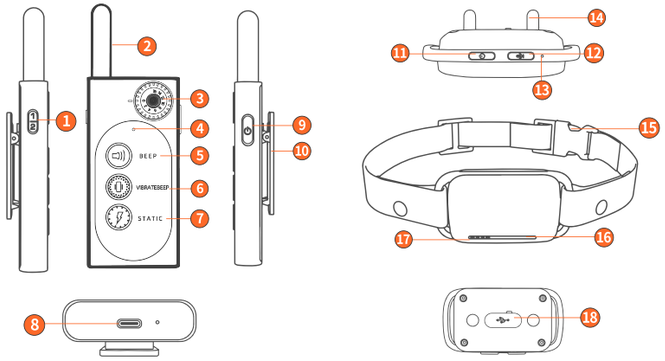

1. Channel switch
2. Transmitting antenna
3. Adjusting gears
4. Remote control indicator
5. Sound button
6. Vibrate button
7. Electric shock button
8. USB Type-C interface
9. Remote control power
10. Safety Clip
11. Trainer Power
12. Record button
13. Microphone
14. Electric shock head
15. Buckle
16. LED lights
17. Speakers
18. Trainer charging interface

In startup state: within 0.5 seconds, double-click the POWER key and press any key of the remote controller. The receiver beeps twice, indicating successful pairing.

Recording function

1. Press and hold the record button to start recording after the blue light is on Release to stop
1. Double-click the record button to delete existing recordings in the power-on state The green LED lights up to delete successfully

QUICK USER CARD

PZH -X03B

TRAINING OPERATION

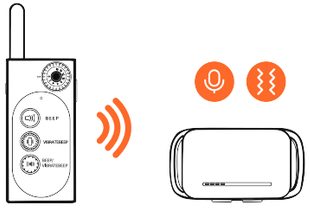

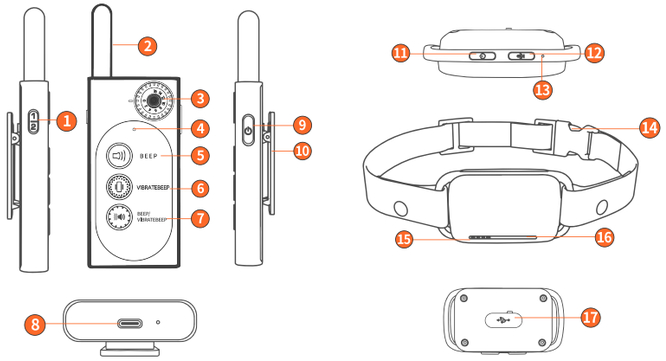

1. Channel switch
2. Transmitting antenna
3. Adjusting gears
4. Remote control indicator
5. Sound button
6. Vibrate button
7. Beep/ Vibratebeep
8. USB Type-C interface
9. Remote control power
10. Safety Clip
11. Trainer Power
12. Record button
13. Microphone
14. Buckle
15. Speakers
16. LED lights
17. Trainer charging interface

In startup state: within 0.5 seconds, double-click the POWER key and press any key of the remote controller. The receiver beeps twice, indicating successful pairing.

Recording function

1. Press and hold the record button to start recording after the blue light is on Release to stop
1. Double-click the record button to delete existing recordings in the power-on state The green LED lights up to delete successfully

This equipment has been tested and found to comply with the limits for a Class B digital device, pursuant to part 15 of the FCC Rules. These limits are designed to provide reasonable protection against harmful interference in a residential installation. This equipment generates, uses and can radiate radio frequency energy and, if not installed and used in accordance with the instructions, may cause harmful interference to radio communications. However, there is no guarantee that interference will not occur in a particular installation. If this equipment does cause harmful interference to radio or television reception, which can be determined by turning the equipment off and on, the user is encouraged to try to correct the interference by one or more of the following measures:

- Reorient or relocate the receiving antenna.
- Increase the separation between the equipment and receiver.
- Connect the equipment into an outlet on a circuit different from that to which the receiver is connected.
- Consult the dealer or an experienced radio/TV technician for help.

Caution: Any changes or modifications to this device not explicitly approved by manufacturer could void your authority to operate this equipment.

This device complies with part 15 of the FCC Rules. Operation is subject to the following two conditions: (1) This device may not cause harmful interference, and (2) this device must accept any interference received, including interference that may cause undesired operation.

The device has been evaluated to meet general RF exposure requirement.