220.00 mm

115.00 mm

Rebeosoii

QUICK START GUIDE

Model:G11
Read this manual carefully before operating the Rebeosoii Tablet

Technical Parameters

Product Name:Tablet PC
Model:G11
System:Android™13.0
Android is a trademark of Google LLC;
Dimension:W207mm × H122mm × D9.0mm
Weight:Approximately 528g
BatteryCapacity:5000mAh

Packagecontent:

Device
USB Cable
USB poweradaptor
Temperglass(LCDProtector)

Type-C USB connector

Connect the Type-C USB connector to charge the battery with a Type-C USB cable Do not plug a Type-C USB cable into your device multipurpose jack.Doing so may damage the device

ABOUT THE TABLET

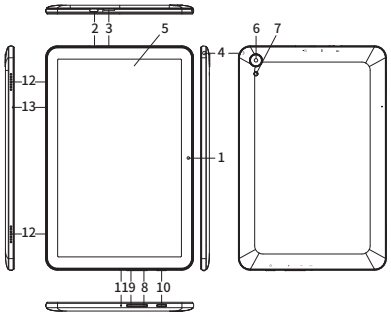

1. front camera
2. USB Type-C (charging &data transfer)
3. micro SD
4.3.5mm audio jack
5. touch screen
6. back camera
7. flash
8.volume+
9. volume-
10.on/off button
11.reset
12. speaker
13. microphone

TURNING ON

Press and hold the power button for a couple of seconds to turn on your tablet. You might need to charge the tablet first.

EXPANDING STORAGE

You can expand your storage space for saving files and installing programs by adding microSD card (microSD, microSDHC or microSDXC). The maximum supported capacity is 64 GB.

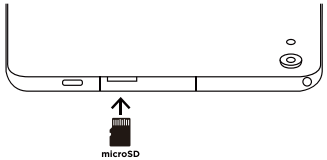

Accessing more information

To view the full user manual on your device launch the Setting app and tap User Manual. Visit www.rebeosoii.com to view device information, the manual and more.

Maintaining water and dust resistance

The device may be damaged if water or dust enters the device.
Follow these tips carefully to preventdamage to the device and to maintain thewaterand dust resistant performance of the device.
Do not immerse the devicein waterdeeper the 1.5m or keep it submerged for more then 3 minutes.

Do not expose the device to water moving with force.
Perhaps the device exposed to clean water, dry it thoroughly with a cleansoft clothIfthe device is exposed to otherliquidssuchas salt waterionized wateroralcoholic beverage rinse it with clean water and dryit thoroughly with a clean soft cloth.if you do not follow these instructionsthe device performanceand appearance may be affected.
If the device has been immersed in wateror microphone or speakeriswetsoundmaynot be heard clearly during a call.
After wiping the device with a dry cloth, dry it thoroughly before using it.

Made in PRC

55 mm

220.00 mm

115.00 mm

FCC WARNING

This device complies with part 15 of the FCC Rules. Operation is subject to the following two conditions: (1) this device may not cause harmful interference, and (2) this device must accept any interference received, including interference that may cause undesired operation.
Any changes or modifications not expressly approved by the party responsible for compliance could void the user's authority to operate the equipment.
NOTE: This equipment has been tested and found to comply with the limits for a Class B digital device, pursuant to Part 15 of the FCC Rules. These limits are designed to provide reasonable protection against harmful interference in a residential installation. This equipment generates, uses and can radiate radio frequency energy and, if not installed and used in accordance with the instructions, may cause harmful interference to radio communications. However, there is no guarantee that interference will not occur in a particular installation.
If this equipment does cause harmful interference to radio or television reception,
which can be determined by turning the equipment off and on, the user is encouraged to try to correct the interference by one or more of the following measures:

-- Reorient or relocate the receiving antenna.
-- Increase the separation between the equipment and receiver.
-- Connect the equipment into an outlet on a circuit different
from that to which the receiver is connected.
-- Consult the dealer or an experienced radio/TV technician for help.

The device has been evaluated to meet general RF exposure requirements. The device can be used in portable exposure conditions without restriction.

The FCC Statement of Exposure to RF and the SAR limit for the United States (FCC) is 1.6 W/kg average for each gram of tissue. This device was tested for typical operations of use on the body. This device was tested for typical operations 0mm from the body.

55 mm