sesamsec

Secustos

Multi-frequency access control readers

USER MANUAL

TABLE OF CONTENTS

1 INTRODUCTION 3
1.1 ABOUT THIS MANUAL 3
1.2 SESAMSEC SUPPORT 3
2 SAFETY INFORMATION 4
3 PRODUCT DESCRIPTION 7
3.1 INTENDED USE 7
3.2 PRODUCT FAMILY 7
3.3 CREDENTIAL-RELEVANT SPECIFICATIONS 10
3.4 FIRMWARE 10
3.5 LABELING 10
3.6 SCOPE OF DELIVERY 10
3.6.1 COMPONENTS 10
3.6.2 ACCESSORIES 12
4 INSTALLATION 13
4.1 GETTING STARTED 13
4.2 INSTALLATION SITE REQUIREMENTS 14
4.3 INSTALLATION OVERVIEW 14
4.4 ELECTRICAL CONNECTION 15
4.4.1 CONNECTOR ASSIGNMENT 15
4.4.2 CABLE INFORMATION 16
4.4.3 WIRING DIAGRAM 16
4.5 MOUNTING OPTIONS 17
4.5.1 SECUSTOS SQ80 SERIES 17
4.5.2 SECUSTOS MU20 SERIES 20
5 SETTINGS 21
5.1 GENERAL SETTINGS 21
5.2 CONFIGURATION WITH SECUSTOS SECO APP 22
5.3 CONFIGURATION WITH USB CABLE 22
5.4 CONNECTION TO AN ACCESS CONTROLLER 22
5.4.1 LINE TOPOLOGY 23
5.4.2 STAR TOPOLOGY 23
6 COMPLIANCE STATEMENTS 25
6.1 GENERAL STATEMENTS 25

6.1.1 RF EXPOSURE STATEMENT 25
6.1.2 MEXICO / MÉXICO 25
6.1.3 UL 294 25
6.2 SECUSTOS SQ80 K LEGIC 25
6.2.1 EU 25
6.2.2 FCC 25
6.2.3 ISED / ISDE CANADA 26
6.2.4 CHINA (PRC) / 中华人民共和国 26
6.2.5 TAIWAN / 臺灣 28
6.2.6 UNITED KINGDOM 28
6.3 SECUSTOS SQ80 LEGIC 29
6.3.1 EU 29
6.3.2 FCC 29
6.3.3 ISED / ISDE CANADA 29
6.3.4 CHINA (PRC) / 中华人民共和国 30
6.3.5 TAIWAN / 臺灣 32
6.3.6 UNITED KINGDOM 32
6.4 SECUSTOS MU20 LEGIC 32
6.4.1 EU 32
6.4.2 FCC 32
6.4.3 ISED / ISDE CANADA 33
6.4.4 UNITED KINGDOM 33
APPENDIX 34
A – RELEVANT DOCUMENTATION 34
B – TERMS AND ABBREVIATIONS 34
C – REVISION HISTORY 34

1 INTRODUCTION

1.1 ABOUT THIS MANUAL

This manual is intended for users and installers. It enables the safe and appropriate handling with, and installation of Secustos readers and it gives a general overview, as well as important technical data and safety information about the product. Before installing the product, the users and installers should read and understand the content of this manual.

For the sake of better understanding and readability, this manual might contain exemplary pictures, drawings and other illustrations. Depending on your product configuration, these pictures might differ from the actual design of your product.

The original version of this manual has been written in English. Wherever the manual is available in another language, it is considered as a translation of the original document for information purposes only. In case of discrepancy, the original version in English will prevail.

1.2 SESAMSEC SUPPORT

In case of any technical questions or product malfunction, refer to the sesamsec website (www.seamsec.com) or contact sesamsec technical support at **support@sesamsec.com**

In case of questions regarding your product order, contact your Sales representative or sesamsec customer service at **info@sesamsec.com**

2 SAFETY INFORMATION

Transport and storage

- Carefully observe the transport and storage conditions described on the product packaging or other relevant product documents (e.g. data sheet).

Unpacking and installation

- Before unpacking and installing the product, this manual and all relevant installation instructions must be read carefully and understood.

- The product might show sharp edges or corners and requires a particular attention during the unpacking and installation.
  Unpack the product carefully and do not touch any sharp edges or corners, or any sensitive components on the product. If necessary, wear safety gloves.

- After unpacking the product, check that all components have been delivered according to your order and delivery note.
  Contact sesamsec if your order is not complete.

- The following measures must be checked prior to any product installation:
  - Make sure that the mounting location and tools used for the installation are appropriate and safe. In addition, make sure that the cables intended to be used for the installation are appropriate. Refer to Chapter "Installation" for more information.
  - In case the product is installed outside, check if any further installation steps are required (e.g. sealing of cables or housing). Refer to Chapter "Installation" for more information.
  - The product is an electrical device made of sensitive materials (e.g. glass housing). Check all product components and accessories for any damage.
    A damaged product or component may not be used for the installation.
  - **Life-threatening hazard in the event of fire**
    A faulty or improper installation of the product might cause a fire and lead to death or severe injuries. Check that the mounting location is equipped with appropriate safety installations and devices, like a smoke alarm or fire extinguisher.
  - **Life-threatening hazard due to electrical shock**
    Make sure that there is no voltage on the wires before starting with the electrical wiring of the product and check that power is turned off by testing the power supply of each wire.
    The product may be supplied with power only after the installation has been completed.
  - Make sure that the product is installed in accordance with local electrical standards and regulations and observe general safety measures.
  - Risk of property damage due to transient overvoltage (surges)
    Transient overvoltage implies short-duration voltage peaks that might result in system breakdown or significant damage of electrical installations and devices.
    sesamsec recommends the installation of appropriate Surge Protection Devices (SPD) by qualified and authorized personnel.
  - sesamsec also recommends the installers to follow general ESD protective measures during the installation of the product.

  Please also refer to the safety information in Chapter "Installation".

- The product must be installed in conformity with applicable local regulations.
  Check if a minimum installation height is mandatory and observe all regulations applicable in the region in which the product is installed.

- To comply with the applicable RF exposure requirements, the product should be installed and operated with a minimum distance of 20 cm to any user's/nearby person's body at all times. Refer to Chapter "Compliance statements" for further information about RF exposure compliance.

- In case the product is equipped with a cable, do not twist or pull the cable excessively.

- The product is an electronic device whose installation requires specific skills and expertise.
  The installation of the product should be done by trained and qualified personnel only.

Handling

- Depending on your product configuration, the product might be equipped with one or more light-emitting diodes (LED).
  Avoid direct eye contact with the blinking or steady light of the light-emitting diodes.

- The product has been designed for use under specific conditions, e.g. in a specific temperature range (refer to the product data sheet).
  Any use of the product under different conditions might damage the product or alter its reading performance.

- The use of other RFID devices in direct vicinity to the product, or in combination with the product might damage the product or alter its reading performance. In case of doubts, contact sesamsec for more information.

- The user is liable for the use of spare parts or accessories other than the ones sold or recommended by sesamsec.
  sesamsec excludes any liability for damages or injuries resulting from the use of spare parts or accessories other than the ones sold or recommended by sesamsec.

- In case the product is equipped with a cable, the cable may not be replaced or extended.
  sesamsec excludes any liability for damages or injuries resulting from a use of the product with a cable extension or a replaced cable.

- Like most electronic devices, RFID systems generate electromagnetic waves that can vary in amplitude and frequency. It is generally known and accepted that some RFID devices might potentially interfere with personal medical devices, like pacemakers or hearing aids.
  The access control readers of the Secustos family fulfill general radio and EMC requirements. However, users with a pacemaker or any other medical device should use Secustos readers carefully and refer to the information given by the manufacturer of their medical devices before using the readers.

Maintenance and cleaning

- Any repair or maintenance work should be done by trained and qualified personnel only.
  Do not allow any repair or maintenance work on the product by an unqualified or unauthorized third party.

- **Life-threatening hazard due to electrical shock**
  Before any repair or maintenance work, the power must be turned off.

- Check the installation and electrical connection of the product in regular intervals for any signs of damage or wear. Should any damage or wear be noticed, contact sesamsec or a trained and qualified personnel for repair or maintenance work.

- The product does not need any special cleaning. However, the housing may be carefully cleaned up with a soft, dry cloth and a non-aggressive or non-halogenated cleaning agent on the outer surface only.
  Make sure that the used cloth and cleaning agent do not damage the product or its components (e.g. label(s)).

Disposal

- The product must be disposed of in accordance with applicable local regulations.

Product modifications

- The product has been designed, manufactured and certified as defined by sesamsec.
  Any product modification without prior written approval from sesamsec is prohibited and considered improper use of the product. Unauthorized product modifications may also result in the loss of product certifications.

If you are unsure about any part of the safety information above, contact sesamsec support.

Any failure to comply with the safety information given in this document is considered improper use. sesamsec excludes any liability in case of improper use or faulty product installation.

3 PRODUCT DESCRIPTION

3.1 INTENDED USE

Secustos is a product family of access control readers based on RFID technology that allows users to read RFID media in the 125 kHz (LF) and 13.56 MHz (HF) frequency bands. The readers also support the BLE (2.4 GHz) technology and they have been designed for physical access control applications. The readers are for both indoor and outdoor use in environmental conditions according to the respective product data sheets and installation instructions related to the products.

Any use other than the intended use described in this section, as well as any failure to comply with the safety information given in this document, is considered improper use. sesamsec excludes any liability in case of improper use or faulty product installation.

3.2 PRODUCT FAMILY

The Secustos family contains the following reader models:

Fig. 1 - Secustos SQ80 K LEGIC

Fig. 2 - Secustos SQ80 LEGIC

Frequencies	125 kHz (LF) / 13.56 MHz (HF) / 2.4 GHz (BLE)
Antennas	**Integrated RFID LF antenna** Outer diameter: max. 16.30 mm / 0.64 inch Number of turns: 144 **Integrated RFID HF antenna** Dimensions: approx. 42.00 x 25.00 mm / 1.65 x 0.98 inch Number of turns: 4 **Bluetooth Low Energy** Integrated BLE module
Housing	Metal frame and glass front, potted housing Available in 2 colors (silver or gray)
Dimensions (L x W x H)	**Reader frame only (mounted):** approx. 86.00 x 86.00 x 8.25 mm / 3.38 x 3.38 x 0.33 inch **Rear connector height:** approx. 8.00 mm / 0.31 inch **Reader with rear connector:** approx. 86.00 x 86.00 x 15.90 mm / 3.38 x 3.38 x 0.62 inch **Optional mounting frame:** approx. 86.00 x 86.00 x 9.75 mm / 3.38 x 3.38 x 0.38 inch
Power	Connector X1: 6.0 V – 28 V[1] ES1/PS2 classified power source according to IEC 62368-1, short-circuit current < 8 A
Current consumption	Max. 300 mA @ 6.0 V
Temperature range	Operating: -20 °C up to +60 °C / -4 °F up to +140 °F Storage: -20 °C up to +70 °C / -4 °F up to +158 °F
Weight	Reader, potted, with connectors and mounting plate: approx. 113 g / 3.99 oz
Relative Humidity	Mounted front: IP65 protected housing Transport/Storage: 5% to 95% non-condensing
Reader performance levels[2]	Destructive attack: Level I Line security: Level I Endurance: Level IV Standby power: Level I

[1] For installation in a UL-certified environment, please observe the input voltage of 10 V – 28 V.
[2] As per UL 294 8th Ed.

Fig. 3 - Secustos MU20 LEGIC

Frequencies	125 kHz (LF) / 13.56 MHz (HF) / 2.4 GHz (BLE)
Antennas	**Integrated RFID LF antenna** Outer diameter: max. 16.30 mm / 0.64 inch Number of turns: 144 **Integrated RFID HF antenna** Dimensions: approx. 51.00 x 26.00 mm / 2.01 x 1.02 inch Number of turns: 4 **Bluetooth Low Energy** Integrated BLE module
Housing	Metal frame and glass front, potted housing Available in 2 colors (silver or gray)
Dimensions (L x W x H)	**Reader frame only (mounted):** approx. 123.00 x 42.00 x 8.25 mm / 4.84 x 1.65 x 0.32 inch **Rear connector height:** approx. 8.00 mm / 0.31 inch **Reader with rear connector:** approx. 123.00 x 42.00 x 15.90 mm / 4.84 x 1.65 x 0.62 inch **Optional mounting frame:** approx. 123.00 x 42.00 x 9.85 mm / 4.84 x 1.65 x 0.39 inch
Power	Connector X1: 6.0 V – 28 V[3] ES1/PS2 classified power source according to IEC 62368-1, short-circuit current < 8 A
Current consumption	Max. 300 mA @ 6.0 V
Temperature range	Operating: -20 °C up to +60 °C / -4 °F up to +140 °F Storage: -20 °C up to +70 °C / -4 °F up to +158 °F
Weight	Reader, potted, with connectors and mounting plate: approx. 87.50 g / 3.09 oz
Relative Humidity	Mounted front: IP65 protected housing Transport/Storage: 5% to 95% non-condensing
Reader performance levels[4]	Destructive attack: Level I Line security: Level I Endurance: Level IV Standby power: Level I

Refer to the data sheet of your product for additional technical specifications.

[3] For installation in a UL-certified environment, please observe the input voltage of 10 V – 28 V.
[4] As per UL 294 8th Ed.

3.3 CREDENTIAL-RELEVANT SPECIFICATIONS

Electronic credential transmission technology	RFID / BLE 125 kHz: TWN4 LF module UL V1.0.0.0, (ASK, PSK, FSK) 13.56 MHz and BLE (common chip): HF frontend UL V1.0.0.0, ISO 14443A, ISO 14443B, BLE 4.2
Wireless electronic device OS revision	TWN4 Firmware UL V1.0.0.2
Wireless electronic credential device application software	TWN4 OSDP App UL V1.0.0.0
User verification	Access for administration and maintenance is only possible directly via the host software
Credential identification	The information from cards is sent to the access control system according to end user need. The reader has the ability to identify credentials and pass the information to the access control system if required.

3.4 FIRMWARE

Your product is delivered ex-works with a specific firmware version. Refer to the label attached to the product to find the firmware version installed ex-works.

3.5 LABELING

Your product is delivered ex-works with a label that contains important product information (e.g. firmware, serial no.). This label may not be removed or damaged. In case of a label wear-out, contact sesamsec.

3.6 SCOPE OF DELIVERY

3.6.1 COMPONENTS

The Secustos readers are delivered as a kit with the following components:

Reader

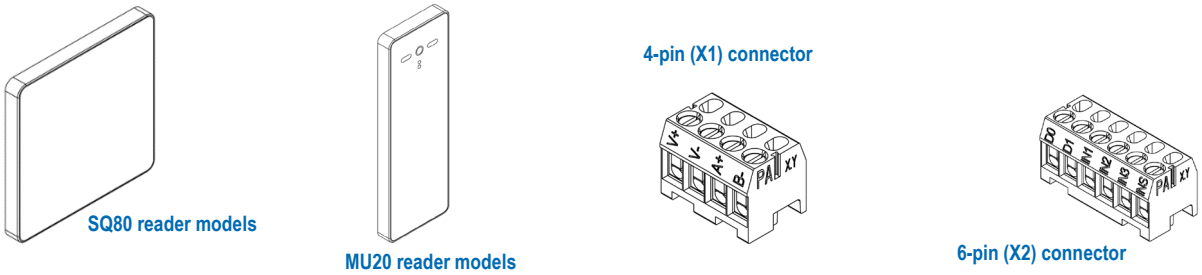

All Secustos readers are equipped ex-works with one 4-pin (X1) and one 6-pin (X2) connector. Depending on the product configuration, the readers are available with or without keypad, in a silver or gray housing.

Mounting plate

for SQ80 reader models

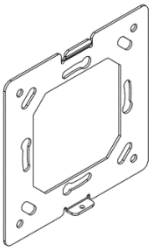

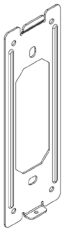

for MU20 reader models

The mounting plate delivered with the kit enables to fix the Secustos reader on a wall. It must be fixed directly to the wall or on a flush-mounted box with 2 to 4 screws[5].

Fixing screw

(countersunk screw with cross recess, M2x5)

The fixing screw delivered with the kit is intended to fix the Secustos reader on the mounting plate. Due to its small size and inconspicuousness, particular attention should be given to the screw when unpacking the kit, as the screw might easily fall down and get lost.

Installation guide

The installation guide delivered with the product gives a short description of the installation options. Please note that the installation guide does <u>not</u> replace the user manual!

[5] Not part of the delivery (screws are generally available on site)

3.6.2 ACCESSORIES

Depending on your product configuration, the product can be delivered with the following accessories:

Mounting frame[6]

for SQ80 reader models

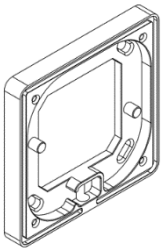

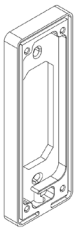

for MU20 reader models

Additional frame required for on-wall installation. The mounting frame is delivered with 4 fixing screws (ISO 7046-1 stainless steel A2 M3x6) and 2 rubber seals on each side of the frame.

USB cable

sesamsec product-specific USB cable intended for maintenance and configuration purposes only. Particular attention should be given when plugging the USB cable in and out of a Secustos reader.

Mounting plate set

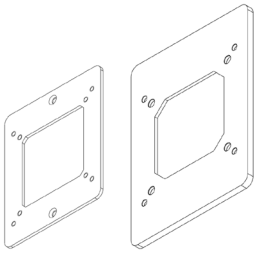

The mounting plate set is intended for the installation of a Secustos SQ80 reader in a wall equipped with a flush mount gang box. The set contains two mounting plates and 4 fixing screws.

[6] To comply with the UL certification requirements, the mounting frame **must** always be used when installing the reader outside. Any failure to meet this requirement will void the UL certification of the product.

4 INSTALLATION

4.1 GETTING STARTED

Before starting with the installation of a Secustos reader, the following measures must be checked:

- Make sure you have read and understood all safety information given in Chapter “Safety information”.
- Make sure that there is no voltage on the wires and check that power is turned off by testing the power supply of each wire.
- Make sure that all tools and components required for the installation are available and appropriate.
- Make sure that the installation site is appropriate for the installation of the reader. In particular, check that the temperature of the installation site is within the operating temperature range given in the Secustos technical documentation and make sure that the wall used for the installation is appropriate. In some cases, the wall material might not be suitable for a safe and durable installation, or it might require specific mounting screws (e.g. drywall). Furthermore, some materials might interfere with the RFID antennas of the reader and reduce its reading performance (e.g. metallic surfaces). Contact sesamsec for more information.
- The reader should be installed at an appropriate and service-friendly installation height. sesamsec recommends an installation height of 110 cm from the ground for a standard installation. However, in some cases (e.g. wheelchair access, local regulations, etc.), the actual installation height on site might differ from the recommended height. Please also note the maximum wall mounting height of 200 cm from the ground.
- In case other RFID devices are already installed on site, or if several Secustos readers must be installed on the same site, observe a minimum distance of 30 cm between all readers and devices in order to achieve the best reading performance for each reader. Should two readers be installed in the same location (e.g. on each side of a wall, next to a door), the wall thickness should also be at least 30 cm to prevent a loss of performance of both readers.

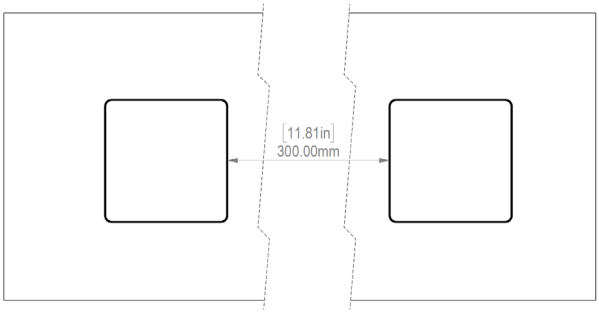

Fig. 4 - Example 1:
installation of 2 readers next to each other

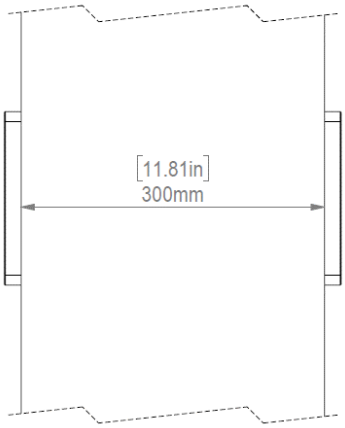

Fig. 5 - Example 2:
installation of 2 readers on each side of a wall

- When installing the reader, do not cover the top left corner of the RFID module (i.e. top right corner when the reader is fixed on the wall), as it would disable both proximity and ambient light sensors.

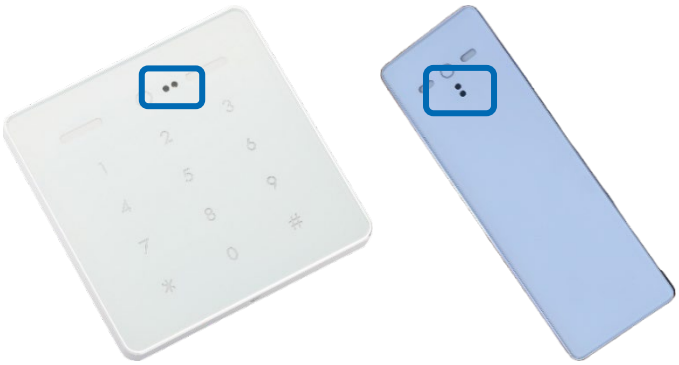

Fig. 6 - proximity and ambient light sensors (blue frames)
Secustos SQ80 (left) and MU20 (right) reader models

- The protective film on the housing front should only be removed after complete installation of the reader.

4.2 INSTALLATION SITE REQUIREMENTS

Secustos readers can be installed in any locations that meet the requirements listed in this manual and in the respective data sheets. For instance, the installation site must comply with the requirements below:

- Relative humidity: 5% to 95%, non-condensing
- Ambient temperature within the operating temperature range of the reader:
  -20 °C up to +60 °C / -4 °F up to +140 °F
- Installation height (from the ground) < 200 cm (110 cm recommended)

Any location that does not meet these requirements is not appropriate for the installation of a Secustos reader.

4.3 INSTALLATION OVERVIEW

The illustration below gives an overview of an exemplary installation of a Secustos reader:

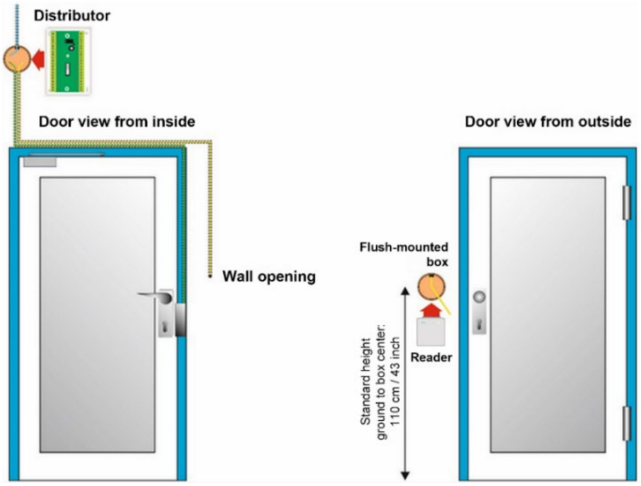

Fig. 7

4.4 ELECTRICAL CONNECTION

4.4.1 CONNECTOR ASSIGNMENT

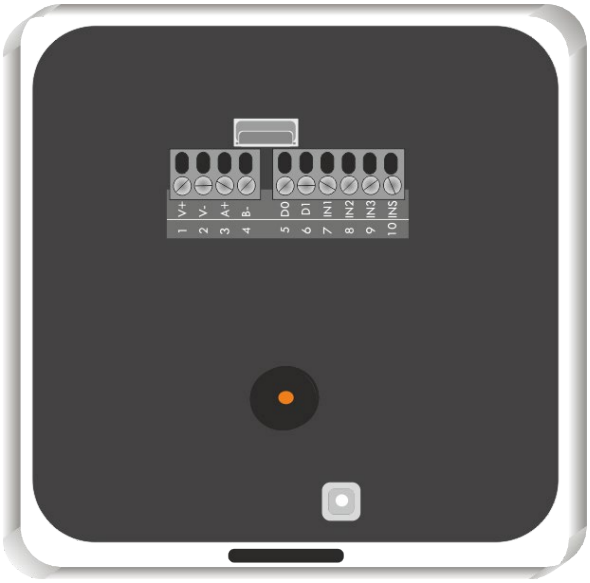

Fig. 8 - connectors on Secustos SQ80 reader models

Fig. 9 - connectors on Secustos MU20 reader models

Power supply	
V+	Input voltage 6 – 28 V[7]
V-	Ground

Data transfer[8]	
A+	RS-485, cable length: max. 1000 m
B-	RS-485, cable length: max. 1000 m
D0	Wiegand D0, cable length: max 200 m
D1	Wiegand D1, cable length: max 200 m
IN1	Digital input 1, cable length: max 200 m
IN2	Digital input 2, cable length: max 200 m
IN3	Digital input 3, cable length: max 200 m
INS	Digital input S (for external Sabotage switch), optional if sabotage button is not available on the reader, cable length: max 200 m
Cable routing requirements: twisted pair cabling (D0/GND, D1/GND).	

Maintenance / Configuration	
USB	4-pin USB connector, 1.25 mm pitch (for maintenance and configuration purposes only)

[7] For installation in a UL-certified environment, please observe the input voltage of 10 – 28 V.
[8] For installation in a UL-certified environment, please observe the max. cable length of 30 m. In addition, the minimum permissible wire size to be used shall not be less than 23 AWG (0.28 mm^2).

4.4.2 CABLE INFORMATION

Typical installation cables are JY(ST)Y 4x2x0.6 or JY(ST)Y 4x2x0.8.

Alternatively, any other appropriate cables that meet the prerequisites of RS-485 installations and wirings can be used. In addition, the installation cable used to connect the controller must contain a cable shield and/or a drain wire with PE connection. The cable shield/drain wire may not be connected to the reader, but only to the controller.

4.4.3 WIRING DIAGRAM

The diagrams below illustrate a typical wiring installation of the reader(s) in different configurations:

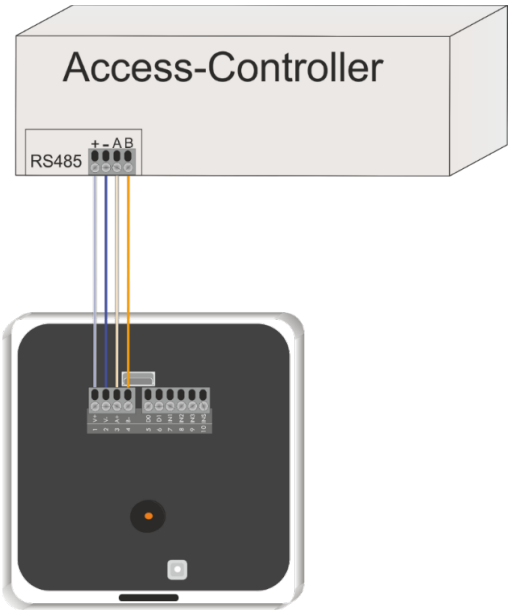

Fig. 10

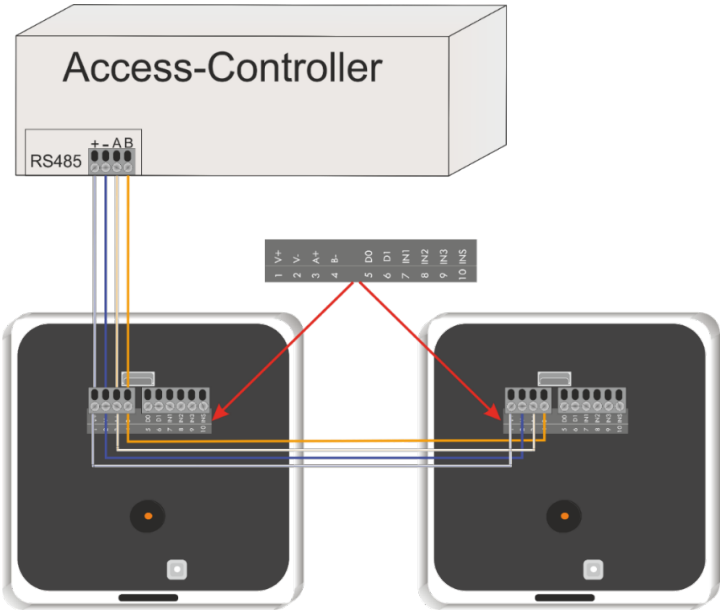

Fig. 11

The following configuration is technically feasible. However, it has not been tested in accordance with UL 294. Thus, it is not part of the UL certification granted to the readers.

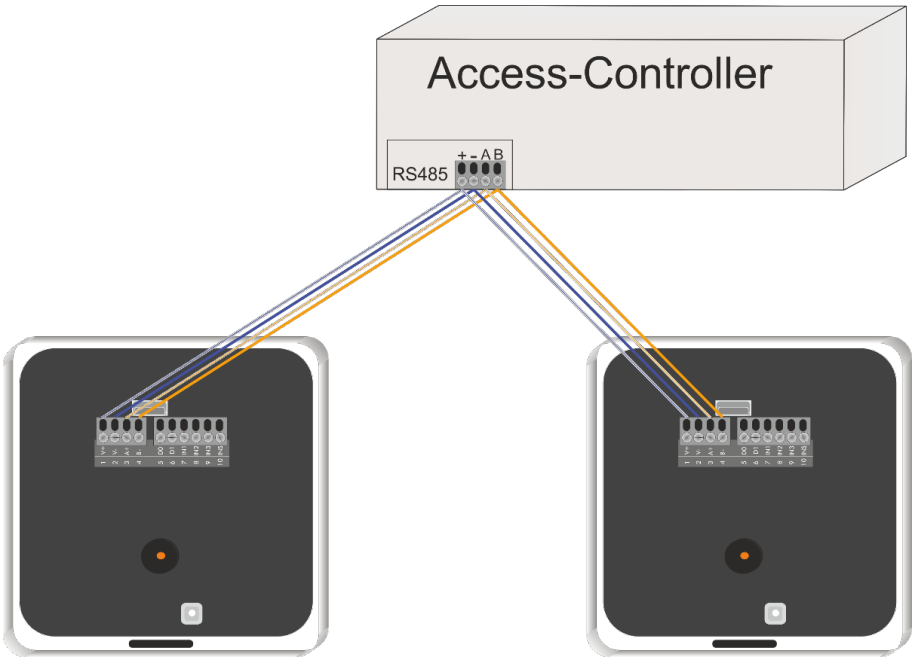

Fig. 12

4.5 MOUNTING OPTIONS

For installation in a UL-certified environment:
To comply with the UL certification requirements, the mounting frame **must** always be used when installing the reader outside. Any failure to meet this requirement will void the UL certification of the product.

4.5.1 SECUSTOS SQ80 SERIES

4.5.1.1 INSTALLATION DIRECTLY ON THE WALL

1. Fix the mounting frame to the wall as described below:

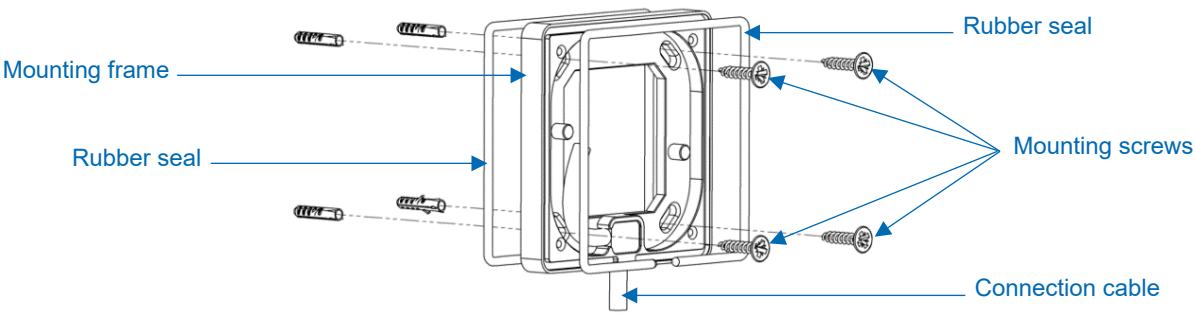

2. The mounting frame is equipped with a cable inlet on its bottom side, which also serves as a cable strain relief. Optionally, the cable inlet can be sealed with silicone.

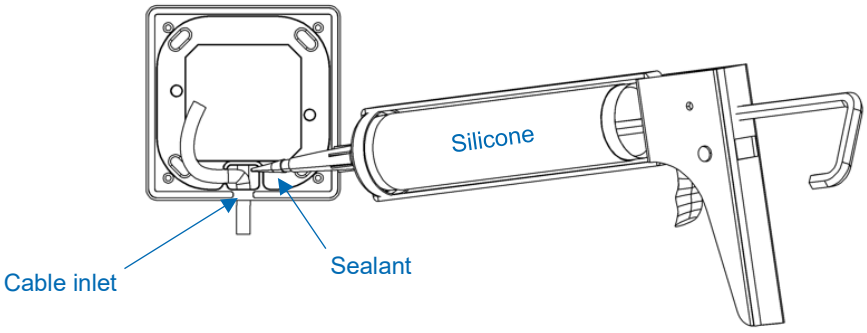

3. Finally, attach the mounting plate to the mounting frame, and the reader to the mounting plate as described below:

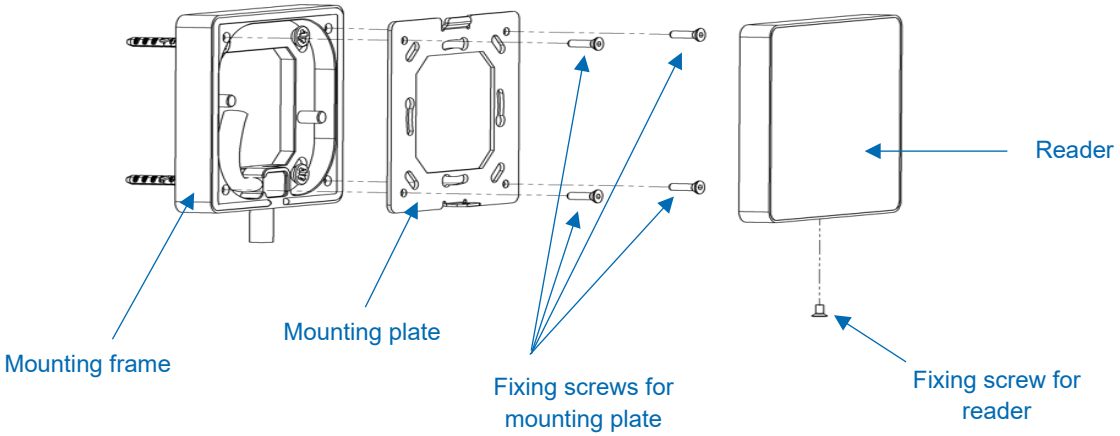

4.5.1.2 INSTALLATION WITH FLUSH-MOUNTED BOX

1. Attach the mounting plate to the flush-mounted box, and the reader to the mounting plate as described below:

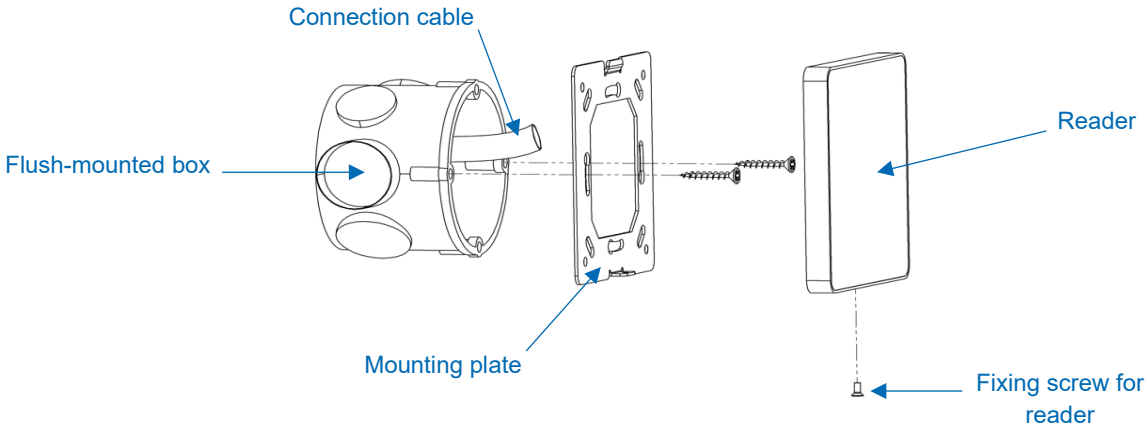

4.5.1.3 INSTALLATION WITH GANG BOX

1. Attach the reader with the mounting plate and the specific mounting plate set for gang boxes as described below:

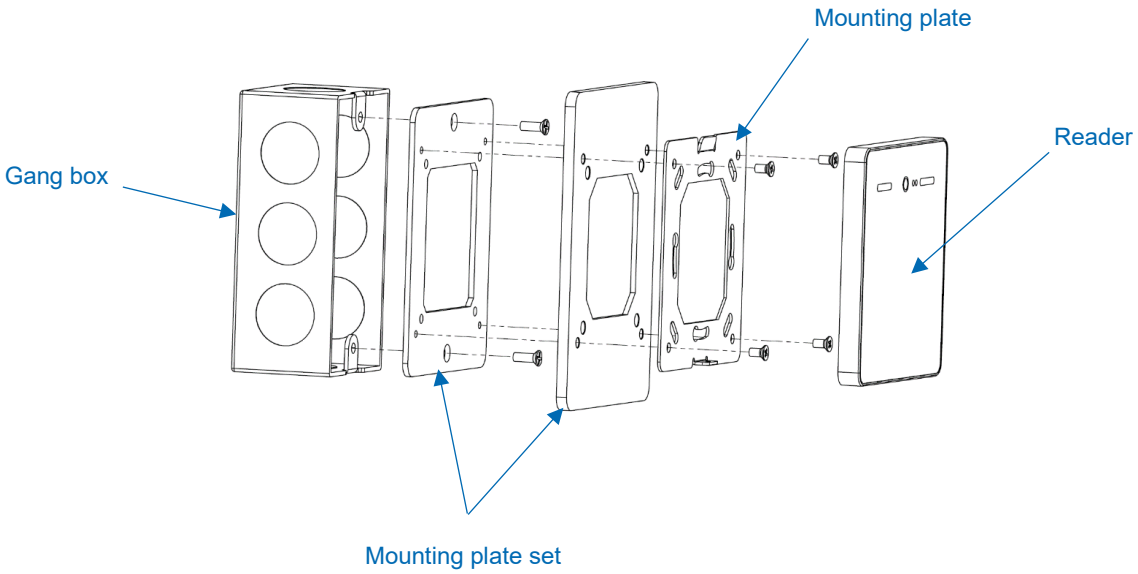

In case the reader is installed outside, use the Secustos mounting frame and the specific mounting plate set for gang boxes, as described below:

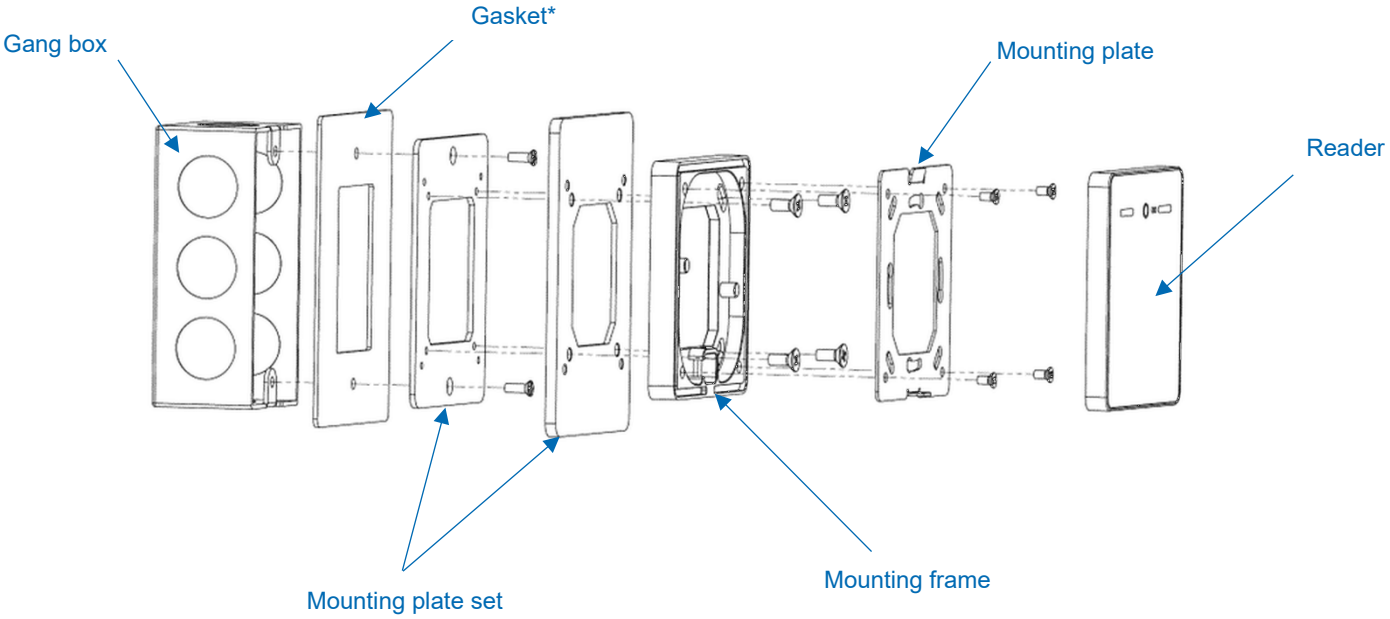

* Please note that the gasket is not part of the delivery and must be acquired separately from 3rd party providers.

4.5.2 SECUSTOS MU20 SERIES

1. Fix the mounting frame to the wall as described below:

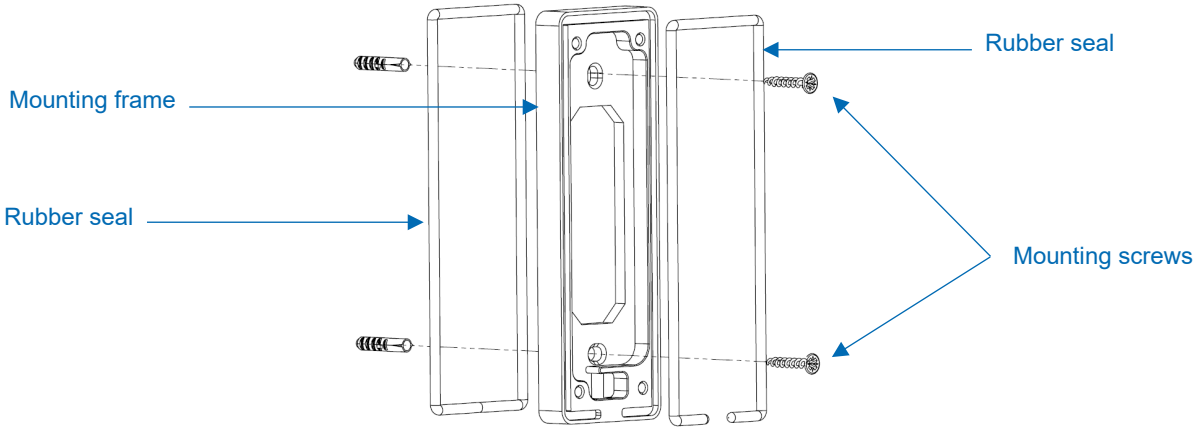

2. The mounting frame is equipped with a cable inlet on its bottom side, which also serves as a cable strain relief. Optionally, the cable inlet can be sealed with silicone.

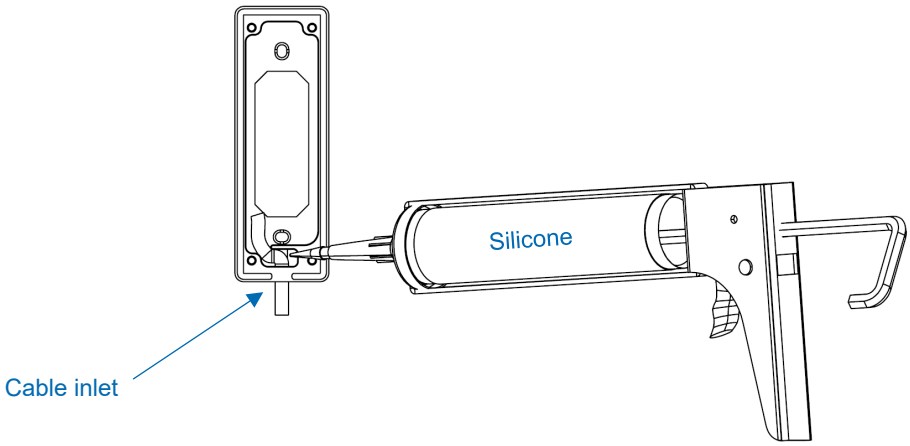

3. Finally, attach the mounting plate to the mounting frame, and the reader to the mounting plate as described below:

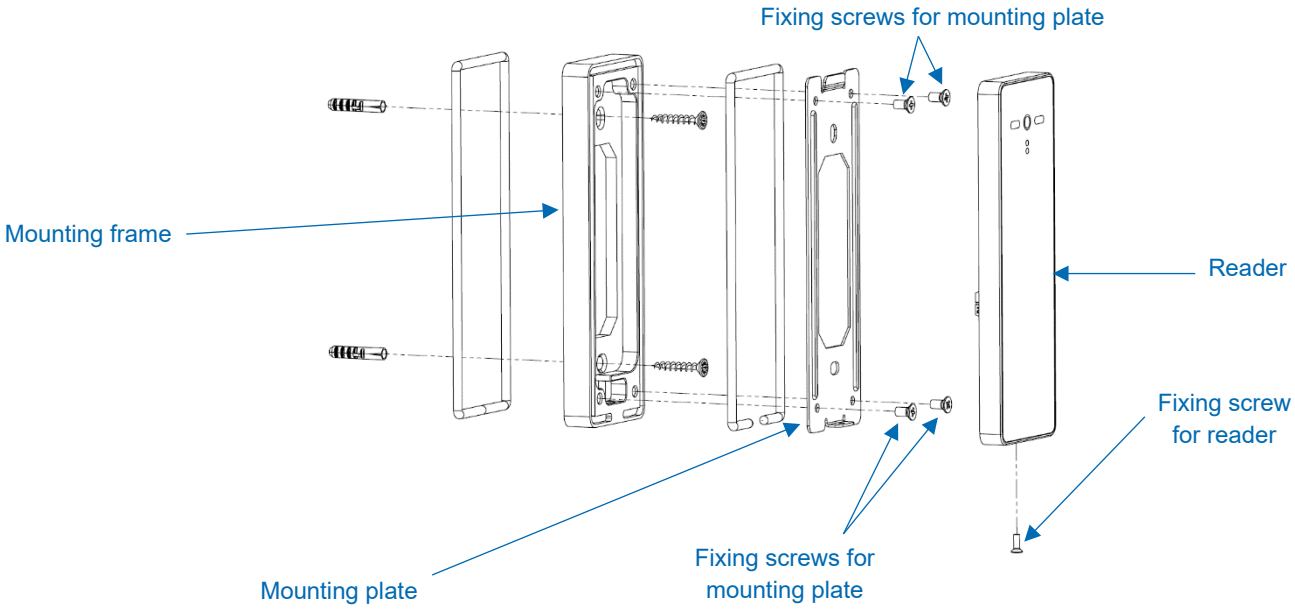

5 SETTINGS

5.1 GENERAL SETTINGS

Secustos readers are highly flexible and versatile products that support many types of transponder technologies[9]. This includes operating frequency, various types of chip technologies, data access and output formatting. Depending on the actual project and used transponders, the reader must be configured accordingly. This can be done using sesamsec own configuration tool, SecoTool. Refer to the SecoTool user guide for a detailed description of the transponder configuration process.

By default, the reader is delivered ex-works with the following settings:

- OSDP: 9600 baud
- Address: 0
- Terminating resistors: off
- LED settings: the top left LED is signaling the state of the device, as described below:

LED behavior	Status	Explanation
Blinking light, amber	Power up	According to the OSDP standard, no connection can be established to the reader in this first phase after powering up.
Blinking light, blue	Ready to Connect	10 seconds after powering up, the LED starts blinking blue. It is now possible to establish an OSDP connection to the reader.
Steady light, blue	Idle	Once the device is connected to the controller, the LED lights up with a steady blue light. This is the normal operating condition.
Steady light, green	Credential read	As soon as a credential has been read, the LED lights up green for two seconds, before turning back to blue again.
Blinking light, magenta	Smart Config	During the configuration of the device with a smartphone, the LED starts blinking magenta. This functionality can be activated as an option.

Further settings, like the optional keypad function, or a customer-specific configuration are also possible and can be defined with SecoTool. Refer to the SecoTool user guide for a detailed description of the configuration options.

[9] Only MIFARE Classic 1k and EM4102 have been tested as part of the UL 294 certification.

5.2 CONFIGURATION WITH SECUSTOS SECO APP

The reader configuration with the Secustos Seco app[10] requires an NFC-enabled mobile device (e.g. smartphone or tablet) with Android operating system (from Android 4.0). The Seco app must be downloaded from the Google Play Store and installed on the mobile device.

Seco app
sesamsec GmbH

https://play.google.com/store/apps/details?id=com.sesamsec.secoapp

Once the app has been installed, it is possible to set parameters on the mobile device and transmit them subsequently on the reader via NFC.

5.3 CONFIGURATION WITH USB CABLE

The reader can also be configured using the sesamsec specific USB cable (refer to Chapter "Accessories") and sesamsec SecoTool.

To do so, proceed as follows:

1. Connect the reader to a PC with the USB cable.
   Particular attention should be given when plugging the USB cable in and out of the reader, as the 4-pin USB connector is a very sensitive component.
   Do not twist or pull excessively on the reader and press the connector lock when plugging the cable out.

2. Open SecoTool on the PC and set the reader as requested.
   Refer to the Secustos technical handbook for more information about the reader settings.

3. Save your settings before closing SecoTool and disconnect the reader from the PC by plugging out the USB cable carefully.

5.4 CONNECTION TO AN ACCESS CONTROLLER

A typical installation contains one or more Secustos readers connected to a controller via RS-485, each device operating as follows:

- Reader
  1. reads data from a credential[11];
  2. format the data; and
  3. sends it to the controller via RS-485.

[10] Please note that the reader configuration with the Secustos Seco app has not been tested as part of the UL 294 certification.
[11] Secustos readers support many credential bit lengths and output formats. As an example, it is possible to send the UID (32 bits) of a MIFARE Classic 1k as raw data or formatted in decimal or hexadecimal. Refer to the SecoTool user guide for a list of all available output formats.

- Controller
  1. receives data from the reader;
  2. matches the data against an access list; and
  3. grants or deny access.

The chapters below describe an exemplary installation of Secustos with the sesamsec Secpass controller[12] in two different configurations.

5.4.1 LINE TOPOLOGY

In this configuration, the reader bus consists of one reader connected to an RS-485 controller bus. An address must be assigned to the reader and the terminating resistors of the RS-485 bus on the reader and on the controller must also be set.

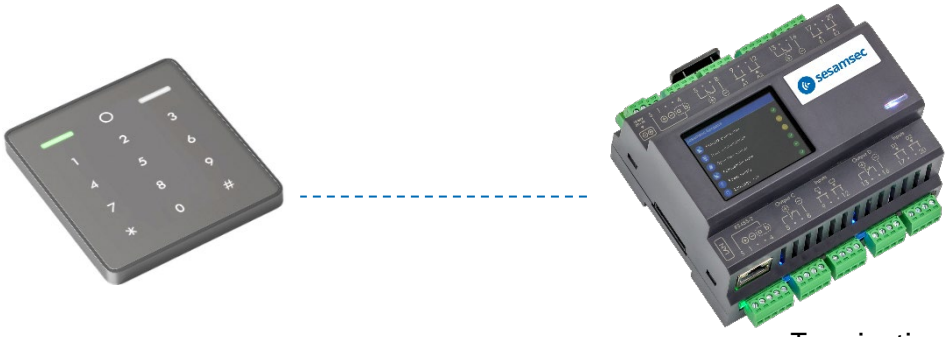

Reader
Address: 0
Terminating resistor: on

Controller
Terminating resistor: on

5.4.2 STAR TOPOLOGY

The following configuration is technically feasible. However, it has not been tested in accordance with UL 294. Thus, it is not part of the UL certification granted to the readers.

In this configuration, the reader bus consists of max. two readers, which are both connected to the same RS-485 controller bus. An address must be assigned to each reader before initial operation (e.g. Reader 1 = Address 0, Reader 2 = Address 1) as two readers with the same address would cause a conflict.
The terminating resistors of the RS-485 bus on both readers must be on, whereas the terminating resistor of the RS-485 bus on the controller must be off.
The terminating resistors of the RS-485 bus on the readers and on the controller must also be set.

[12] The UL 294 certification granted to the Secustos readers is not conditioned by the exclusive use of the readers with the Secpass controller described above, as the Secustos readers have been evaluated using other controllers as part of the UL 294 certification.

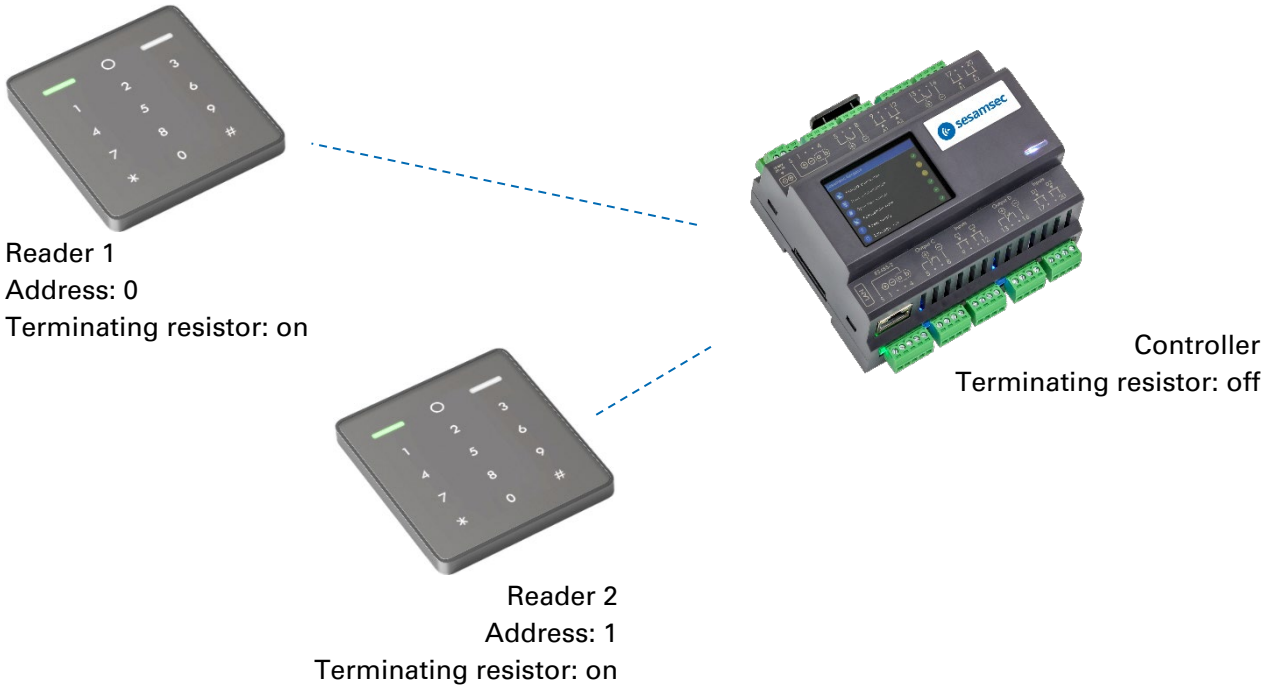

Please note:

- A star topology is only possible with max. two readers.
- In general, the terminating resistors of the devices opening and closing the RS-485 bus must be on. The terminating resistors of all other devices within the RS-485 bus are off.
- An RS-485 bus should contain max. two readers. Operating more than two readers would lead to a performance loss.
- The correct configuration of the controller is necessary to ensure a proper function of the readers.
- Secustos readers are also equipped with a tamper switch, which is intended to prevent any sabotage. However, tampering the reader (i.e. activating the tamper switch of the reader) does not immediately lead to an alarm. In this case, the status of the tamper switch is sent to the controller, which activates by itself appropriate actions.

6 COMPLIANCE STATEMENTS

6.1 GENERAL STATEMENTS

6.1.1 RF EXPOSURE STATEMENT

The readers of the Secustos family comply with the RF exposure requirements for mobile and fixed devices (47 CFR 2.1091). However, the devices shall be used in such a manner that the potential for human contact during normal operation is minimized.

6.1.2 MEXICO / MÉXICO

La operación de este equipo está sujeta a las siguientes dos condiciones:

(1) Es posible que este equipo o dispositivo no cause interferencia perjudicial y
(2) Este equipo o dispositivo debe aceptar cualquier interferencia, incluyendo la que pueda causar su operación no deseada.

6.1.3 UL 294

The readers of the Secustos family have been UL listed as part of the UL 294 certification. However, the readers must be installed and used in accordance with the UL-specific requirements and technical specifications listed in this manual.

6.2 SECUSTOS SQ80 K LEGIC

6.2.1 EU

Hereby, sesamsec GmbH declares that Secustos SQ80 K LEGIC complies with Directive 2014/53/EU. The full text of the EU declaration of conformity is available at the following internet address: sesamsec.me/approvals

6.2.2 FCC

FCC ID: 2BAACSQ80KLE

The device above complies with Part 15 of the FCC Rules. Operation is subject to the following two conditions:
(1) this device may not cause harmful interference, and
(2) this device must accept any interference received, including interference that may cause undesired operation. (except receivers associated with operation of a licensed radio service and stand-alone devices).

Caution
The Federal Communications Commission (FCC) warns the users that changes or modifications to the unit not expressly approved by the party responsible for compliance could void the user's authority to operate the equipment.

FCC §15.105 (b)

Note: This equipment has been tested and found to comply with the limits for a Class B digital device, pursuant to part 15 of the FCC Rules. These limits are designed to provide reasonable protection against harmful interference in a residential installation. This equipment generates, uses and can radiate radio frequency energy and, if not installed and used in accordance with the instructions, may cause harmful interference to radio communications. However, there is no guarantee that interference will not occur in a particular installation. If this equipment does cause harmful interference to radio or television reception, which can be determined by turning the equipment off and on, the user is encouraged to try to correct the interference by one or more of the following measures:

- Reorient or relocate the receiving antenna.
- Increase the separation between the equipment and receiver.
- Connect the equipment into an outlet on a circuit different from that to which the receiver is connected.
- Consult the dealer or an experienced radio/TV technician for help.

6.2.3 ISED / ISDE CANADA

IC: 30098-SQ80KLE

The device above contains licence-exempt transmitter(s)/receiver(s) that comply with Innovation, Science and Economic Development Canada's licence-exempt RSS(s). Operation is subject to the following two conditions:
1. This device may not cause interference.
2. This device must accept any interference, including interference that may cause undesired operation of the device.

L'émetteur/récepteur exempt de licence contenu dans le présent appareil est conforme aux CNR d'Innovation, Sciences et Développement économique Canada applicables aux appareils radio exempts de licence. L'exploitation est autorisée aux deux conditions suivantes:
1. L'appareil ne doit pas produire de brouillage;
2. L'appareil doit accepter tout brouillage radioélectrique subi, même si le brouillage est susceptible d'en compromettre le fonctionnement.

6.2.4 CHINA (PRC) / 中华人民共和国

Micropower scope of use declaration: Secustos SQ80 K LEGIC supports transmission frequencies of 13.56 MHz and 125 kHz. The user needs to adhere to the following specifications when using the product: (1) The specific provisions listed in the "catalog and the technical specifications for micropower short-range radio transmission equipment" as well as the usage scenarios for the antenna type used, the functions, and the customary use of the	**微功率使用规范声明：** Secustos SQ80 K LEGIC 支持 13.56MHz 和 125kHz 发射频率，用户在使用过程中，需要遵守以下要求： （一） 符合"微功率短距离无线电发射设备目录和技术要求"的具体条款和使用场景，采用的天线类型和性能，控制、调整及开关等使用方法； 发射功率：

control system, regulation, and switches must be complied with; Transmission power: 13.56 MHz: ≤ -6.60 dBμA/m (field strength at 10 meters, standard max value) 125 kHz: ≤ -0.60 dBμA/m (field strength at 10 meters, standard max value) Antenna: built-in antenna (cannot be removed) Control system, regulation, and switches: The user cannot control, regulate, or switch over the radio transmission function of the antenna. (2) The unauthorized modification of usage scenarios or the conditions of use, expansion of the transmission frequency range, or increase of the transmission power (including installing additional transmission power amplifiers), as well as the unauthorized modification of the transmission antenna are not allowed; (3) The product may not interfere in any way with any legal radio transmitters (stations) and may not offer any shielding from harmful interference; (4) The product must be able to tolerate interference caused by industrial, scientific, and medical (ISM) devices which radiate high frequency energy or other legal interference from radio transmitters (stations); (5) Should the product cause harmful interference on other legal radio transmitters (stations), product use must be discontinued immediately and suitable measures must be taken prior to using the product again in order to eliminate said interference; (6) When using micropower devices inside of an aircraft or radiometric observatories, or when using such devices in meteorological radar stations, satellite ground stations (including measuring and control stations, distance measuring stations, receiving stations, or navigation stations), as well as in radio transmitters (stations) used by the military and electromagnetic environment protections zones	13.56MHz：≤ -6.60dBμA/m (10 米处场强， 准峰值) 125kHz：≤ -0.60dBμA/m (10 米处场强， 准峰值) 天线：内置天线（不可拆卸） 控制、调整及开关：用户不能控制、调制及开关此无线电发射功能 （二）不得擅自改变使用场景或使用条件、扩大发射频率范围、加大发射功率（包括额外加装射频功率放大器），不得擅自更改发射天线； （三）不得对其他合法的无线电台（站）产生有害干扰，也不得提出免受有害干扰保护； （四）应当承受辐射射频能量的工业、科学及医疗（ISM）应用设备的干扰或其他合法的无线电台（站）干扰； （五）如对其他合法的无线电台（站）产生有害干扰时，应立即停止使用，并采取措施消除干扰后方可继续使用； （六）在航空器内和依据法律法规、国家有关规定、标准划设的射电天文台、气象雷达站、卫星地球站（含测控、测距、接收、导航站）等军民用无线电台（站）、机场等的电磁环境保护区域内使用微功率设备，应当遵守电磁环境保护及相关行业主管部门的规定； （七）禁止在以机场跑道中心点为圆心、半径 5000 米的区域内使用各类模型遥控器； （八）微功率设备使用时温度和电压的环境条件。 Secustos SQ80 K LEGIC 的工作电压 6.0V-28V（X1 供电）， 工作温度-20℃~60℃，

at airports, all applicable provisions of the competent authorities as well as statutory provisions, national regulations, and national standards must be complied with; (7) Remote controls of any kind may not be used within 5000 meters of airport runways, measured from the middle of the runway; (8) Ambient conditions such as temperature and voltage when using micropower devices: operating voltage of Secustos SQ80 K LEGIC: 6.0 V – 28 V (charging via X1), operating temperature: -20 °C – 60 °C, storage temperature: -20 °C – 70 °C. The user must strictly adhere to these temperature and voltage specifications when using the product.	储存温度-20℃~70℃。 用户需严格按照此温度和电压要求使用。

6.2.5 TAIWAN / 臺灣

注意!

取得審驗證明之低功率射頻器材，非經核准，公司、商號或使用者均不得擅自變更頻率、加大功率或變更原設計之特性及功能。低功率射頻器材之使用不得影響飛航安全及干擾合法通信；經發現有干擾現象時，應立即停用，並改善至無干擾時方得繼續使用。前述合法通信，指依電信管理法規定作業之無線電通信。低功率射頻器材須忍受合法通信或工業、科學及醫療用電波輻射性電機設備之干擾。

6.2.6 UNITED KINGDOM

Secustos SQ80 K LEGIC complies with the requirements of the UK legislations and other regulations as listed in the respective UK declarations of conformity.

The importer is responsible for applying the following information to the packaging of the product:

- the importer company's details, including the company's name and a contact address in the United Kingdom.
- UKCA marking

6.3 SECUSTOS SQ80 LEGIC

6.3.1 EU

Hereby, sesamsec GmbH declares that Secustos SQ80 LEGIC complies with Directive 2014/53/EU. The full text of the EU declaration of conformity is available at the following internet address: sesamsec.me/approvals

6.3.2 FCC

FCC ID: 2BAACSQ80KLE

The device above complies with Part 15 of the FCC Rules. Operation is subject to the following two conditions:
(1) this device may not cause harmful interference, and
(2) this device must accept any interference received, including interference that may cause undesired operation. (except receivers associated with operation of a licensed radio service and stand-alone devices).

Caution
The Federal Communications Commission (FCC) warns the users that changes or modifications to the unit not expressly approved by the party responsible for compliance could void the user's authority to operate the equipment.

FCC §15.105 (b)
Note: This equipment has been tested and found to comply with the limits for a Class B digital device, pursuant to part 15 of the FCC Rules. These limits are designed to provide reasonable protection against harmful interference in a residential installation. This equipment generates, uses and can radiate radio frequency energy and, if not installed and used in accordance with the instructions, may cause harmful interference to radio communications. However, there is no guarantee that interference will not occur in a particular installation. If this equipment does cause harmful interference to radio or television reception, which can be determined by turning the equipment off and on, the user is encouraged to try to correct the interference by one or more of the following measures:

- Reorient or relocate the receiving antenna.
- Increase the separation between the equipment and receiver.
- Connect the equipment into an outlet on a circuit different from that to which the receiver is connected.
- Consult the dealer or an experienced radio/TV technician for help.

6.3.3 ISED / ISDE CANADA

IC: 30098-SQ80KLE

The device above contains licence-exempt transmitter(s)/receiver(s) that comply with Innovation, Science and Economic Development Canada’s licence-exempt RSS(s). Operation is subject to the following two conditions:
1. This device may not cause interference.
2. This device must accept any interference, including interference that may cause undesired operation of the device.

L'émetteur/récepteur exempt de licence contenu dans le présent appareil est conforme aux CNR d'Innovation, Sciences et Développement économique Canada applicables aux appareils radio exempts de licence. L'exploitation est autorisée aux deux conditions suivantes:
1. L'appareil ne doit pas produire de brouillage;
2. L'appareil doit accepter tout brouillage radioélectrique subi, même si le brouillage est susceptible d'en compromettre le fonctionnement.

6.3.4 CHINA (PRC) / 中华人民共和国

Micropower scope of use declaration: Secustos SQ80 LEGIC supports transmission frequencies of 13.56 MHz and 125 kHz. The user needs to adhere to the following specifications when using the product: (1) The specific provisions listed in the "catalog and the technical specifications for micropower short-range radio transmission equipment" as well as the usage scenarios for the antenna type used, the functions, and the customary use of the control system, regulation, and switches must be complied with; Transmission power: 13.56 MHz: ≤ -6.60 dBμA/m (field strength at 10 meters, standard max value) 125 kHz: ≤ -0.60 dBμA/m (field strength at 10 meters, standard max value) Antenna: built-in antenna (cannot be removed) Control system, regulation, and switches: The user cannot control, regulate, or switch over the radio transmission function of the antenna. (2) The unauthorized modification of usage scenarios or the conditions of use, expansion of the transmission frequency range, or increase of the transmission power (including installing additional transmission power amplifiers), as well as the unauthorized modification of the transmission antenna are not allowed; (3) The product may not interfere in any way with any legal radio transmitters (stations) and may not offer any shielding from harmful interference;	**微功率使用规范声明：** Secustos SQ80 LEGIC 支持 13.56MHz 和 125kHz 发射频率，用户在使用过程中，需要遵守以下要求： （二） 符合"微功率短距离无线电发射设备目录和技术要求"的具体条款和使用场景，采用的天线类型和性能，控制、调整及开关等使用方法； 发射功率： 13.56MHz：≤ -6.60dBμA/m (10 米处场强， 准峰值) 125kHz：≤ -0.60dBμA/m (10 米处场强， 准峰值) 天线：内置天线（不可拆卸） 控制、调整及开关：用户不能控制、调制及开关此无线电发射功能 （二）不得擅自改变使用场景或使用条件、扩大发射频率范围、加大发射功率（包括额外加装射频功率放大器），不得擅自更改发射天线； （三）不得对其他合法的无线电台（站）产生有害干扰，也不得提出免受有害干扰保护； （四）应当承受辐射射频能量的工业、科学及医疗（ISM）应用设备的干扰或其他合法的无线电台（站）干扰；

(4) The product must be able to tolerate interference caused by industrial, scientific, and medical (ISM) devices which radiate high frequency energy or other legal interference from radio transmitters (stations); (5) Should the product cause harmful interference on other legal radio transmitters (stations), product use must be discontinued immediately and suitable measures must be taken prior to using the product again in order to eliminate said interference; (6) When using micropower devices inside of an aircraft or radiometric observatories, or when using such devices in meteorological radar stations, satellite ground stations (including measuring and control stations, distance measuring stations, receiving stations, or navigation stations), as well as in radio transmitters (stations) used by the military and electromagnetic environment protections zones at airports, all applicable provisions of the competent authorities as well as statutory provisions, national regulations, and national standards must be complied with; (7) Remote controls of any kind may not be used within 5000 meters of airport runways, measured from the middle of the runway; (8) Ambient conditions such as temperature and voltage when using micropower devices: operating voltage of Secustos SQ80 LEGIC: 6.0 V – 28 V (charging via X1), operating temperature: -20 °C – 60 °C, storage temperature: -20 °C – 70 °C. The user must strictly adhere to these temperature and voltage specifications when using the product.	（五）如对其他合法的无线电台（站）产生有害干扰时，应立即停止使用，并采取措施消除干扰后方可继续使用； （六）在航空器内和依据法律法规、国家有关规定、标准划设的射电天文台、气象雷达站、卫星地球站（含测控、测距、接收、导航站）等军民用无线电台（站）、机场等的电磁环境保护区域内使用微功率设备，应当遵守电磁环境保护及相关行业主管部门的规定； （七）禁止在以机场跑道中心点为圆心、半径 5000 米的区域内使用各类模型遥控器； （八）微功率设备使用时温度和电压的环境条件。 Secustos SQ80 LEGIC 的工作电压 6.0V-28V（X1 供电）， 工作温度-20℃~60℃， 储存温度-20℃~70℃。 用户需严格按照此温度和电压要求使用。

6.3.5 TAIWAN / 臺灣

注意!

取得審驗證明之低功率射頻器材，非經核准，公司、商號或使用者均不得擅自變更頻率、加大功率或變更原設計之特性及功能。低功率射頻器材之使用不得影響飛航安全及干擾合法通信；經發現有干擾現象時，應立即停用，並改善至無干擾時方得繼續使用。前述合法通信，指依電信管理法規定作業之無線電通信。低功率射頻器材須忍受合法通信或工業、科學及醫療用電波輻射性電機設備之干擾。

6.3.6 UNITED KINGDOM

Secustos SQ80 LEGIC complies with the requirements of the UK legislations and other regulations as listed in the respective UK declarations of conformity.

The importer is responsible for applying the following information to the packaging of the product:

- the importer company's details, including the company's name and a contact address in the United Kingdom.
- UKCA marking

6.4 SECUSTOS MU20 LEGIC

6.4.1 EU

Hereby, sesamsec GmbH declares that Secustos MU20 LEGIC complies with Directive 2014/53/EU. The full text of the EU declaration of conformity is available at the following internet address: sesamsec.me/approvals

6.4.2 FCC

FCC ID: 2BAACMU20LE

The device above complies with Part 15 of the FCC Rules. Operation is subject to the following two conditions:
(1) this device may not cause harmful interference, and
(2) this device must accept any interference received, including interference that may cause undesired operation. (except receivers associated with operation of a licensed radio service and stand-alone devices).

Caution
The Federal Communications Commission (FCC) warns the users that changes or modifications to the unit not expressly approved by the party responsible for compliance could void the user's authority to operate the equipment.

FCC §15.105 (b)

Note: This equipment has been tested and found to comply with the limits for a Class B digital device, pursuant to part 15 of the FCC Rules. These limits are designed to provide reasonable protection against harmful interference in a residential installation. This equipment generates, uses and can radiate radio frequency energy and, if not installed and used in accordance with the instructions, may cause harmful interference to radio communications. However, there is no guarantee that interference will not occur in a particular installation. If this equipment does cause harmful interference to radio or television reception, which can be determined by turning the equipment off and on, the user is encouraged to try to correct the interference by one or more of the following measures:

- Reorient or relocate the receiving antenna.
- Increase the separation between the equipment and receiver.
- Connect the equipment into an outlet on a circuit different from that to which the receiver is connected.
- Consult the dealer or an experienced radio/TV technician for help.

6.4.3 ISED / ISDE CANADA

IC: 30098-MU20LE

The device above contains licence-exempt transmitter(s)/receiver(s) that comply with Innovation, Science and Economic Development Canada's licence-exempt RSS(s). Operation is subject to the following two conditions:
1. This device may not cause interference.
2. This device must accept any interference, including interference that may cause undesired operation of the device.

L'émetteur/récepteur exempt de licence contenu dans le présent appareil est conforme aux CNR d'Innovation, Sciences et Développement économique Canada applicables aux appareils radio exempts de licence. L'exploitation est autorisée aux deux conditions suivantes:
1. L'appareil ne doit pas produire de brouillage;
2. L'appareil doit accepter tout brouillage radioélectrique subi, même si le brouillage est susceptible d'en compromettre le fonctionnement.

6.4.4 UNITED KINGDOM

Secustos MU20 LEGIC complies with the requirements of the UK legislations and other regulations as listed in the respective UK declarations of conformity.

The importer is responsible for applying the following information to the packaging of the product:

- the importer company's details, including the company's name and a contact address in the United Kingdom.
- UKCA marking

APPENDIX

A – RELEVANT DOCUMENTATION

sesamsec documentation

- SecoTool user guide
- Secustos installation guide
- Secustos MU20 LEGIC data sheet
- Secustos SQ80 K LEGIC data sheet
- Secustos SQ80 LEGIC data sheet
- sesamsec product catalog for access control (*sesamsec Produktkatalog Zutrittskontrolle*)

external documentation

- Technical documentation related to the installation site
- Optionally: Technical documentation related to connected devices (e.g. access control unit)

B – TERMS AND ABBREVIATIONS

TERM	EXPLANATION
BLE	Bluetooth Low Energy
EMC	electromagnetic compatibility
ESD	electrostatic discharge
GND	ground
HF	high frequency
LF	low frequency
NFC	near-field communication
OS	operating system
PE	protective earth
RF	radio frequency
RFID	radio frequency identification
SPD	surge protection device

C – REVISION HISTORY

VERSION	CHANGE DESCRIPTION	EDITION
01	First edition (replaces *Secustos SQ80 series, use manual*)	05/2024

sesamsec GmbH

Finsterbachstr. 1 • 86504 Merching • Germany
P +49 8233 79445-0 • F +49 8233 79445-20 • E-mail: info@sesamsec.com
sesamsec.com

sesamsec reserves the right to change any information or data in this document without prior notice. sesamsec declines all responsibility for the use of this product with any other specification but the one mentioned above. Any additional requirement for a specific customer application has to be validated by the customer themselves at their own responsibility. Where application information is given, it is only advisory and does not form part of the specification. Disclaimer: All names used in this document are registered trademarks of their respective owners.

© 2024 sesamsec GmbH – Secustos family – user manual – DocRev01 – EN – 05/2024