Product specification acknowledgment.

Shenzhen Maya antenna lab

R&D center in ShenZhen

The mobile communication terminal antenna

PRODUCT NAME I20A WIFI AUX

CUSTOMER NAME 亿道信息

account party	Development party		
Customer acknowledges	Quality Department	R&D Department	approved by
	夏兵	ME：黎文明 RF：朱强清	冯国军
Date： 年 月 日	Date： 2023 年 2 月 13 日		

Shenzhen Maya communication equipment Co., LTD
Site：A second floor, minqing road, minqing road, longhua street, baoan district, shenzhen city.
Tel: 86-755-82916162 Fax: 86-755-82916227

1. aim

For the Production from shenzhen maya communication equipment co., LTD. That mobile communication terminal antenna product specifications and test methods for specification, avoid the test conditions, the error caused by different methods

2.Antenna debug design requirement frequency band.

frequency	frequency band
Two in one	2.4/5.8G WIFI

3.Product cell phone and sky chart.

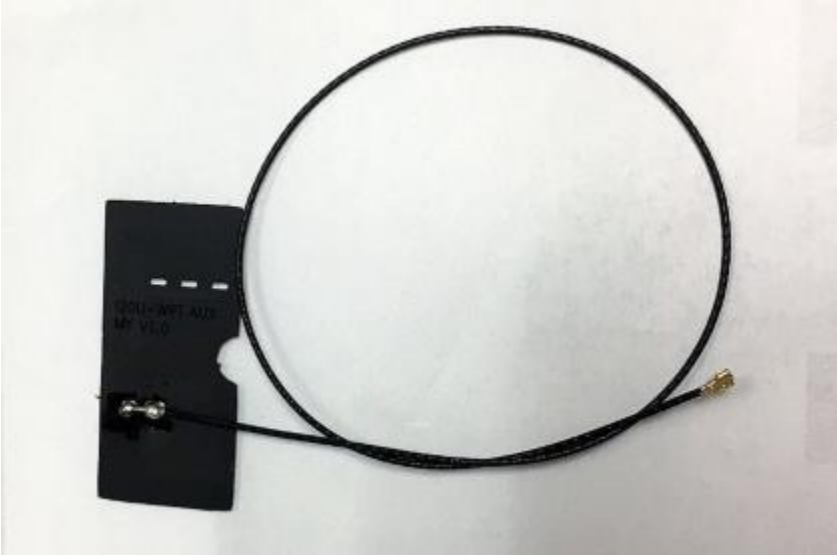

WIFI AUX

4.electrical

4.1Test method description and data.

Device name	use
Vector Network Analyzer	S11/Impedance/ Passive Test
Agilent 8960 SP6010 R&S CMU200	**GSM, GPRS, EDGE, CDMA2000, 1xev-do, td-scdma, WCDMA, HSDPA mobile phone mobile communication equipment test.**
R&S CMW500 MT8820C	**Including td-scdma, WCDMA, HSDPA, LTE, WIFI, GPS mobile phone mobile communication equipment test.**
SP9500E	**Contains 5G, SA, NSA**
Agilent E4438C	**Test active GPS**
MVG Chamber	**Passive Test / OTA active Test / Efficiency/Gain**

4.2Passive Test Report

Test equipment: network analyzer.

Test method: with a 50 ohm CABLE CABLE from the instrument test port is derived, using the calibration after a calibration mechanism of SMA connector, connecting hand records related to the frequency points corresponding return loss and standing wave ratio data.

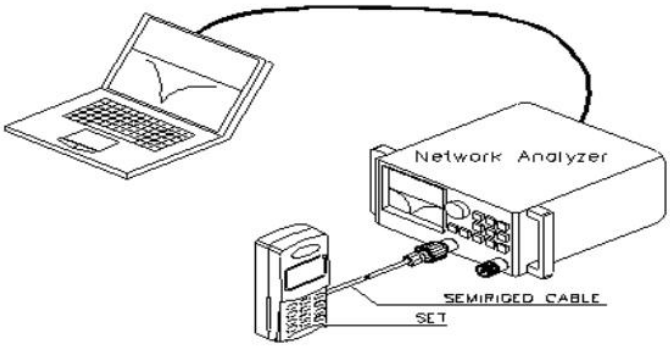

测试示意图

4.3 Active Test Report

TRP/TIS

From testing tools, measuring, network analyzer, full waves far field ETS, French MVG SG24LT (Satmio) near field 3 d microwave dark room, the high precision positioning system and its controller and the computer with automatic test procedure test environment: the temperature of 22 ℃ + 3 ℃, humidity 60% plus or minus 60% test methods: Using EST or 24 lt Satimo system software Test method and calculation of TRP when tested TRP, DUT (Device Under Test) is in a state of maximum transmitted power, including three to choose channel Test, by positioning system control the location of the DUT, with 15 degrees for step length, measuring three dimensional space, the effective radiated power (EIRP) at various points through the average of the integral sphere, computation formula is as follows

$$TRP \cong \frac{\pi}{2NM}\sum_{i=1}^{N-1}\sum_{j=0}^{M-1}\left[EiRP_{\theta}(\theta_i,\phi_j)+EiRP(\theta_i,\phi_j)\right]\sin(\theta_i)$$

In TIS test, the DUT at the maximum transmission power of the state, including three to choose channel test, by controlling the location of the DUT, at 30 degrees for the step length, measuring the three dimensional space each point receiving sensitivity, the average of the sphere by integral calculation, calculation formula is as follows:

$$TIS \cong \frac{2NM}{\pi\sum_{i=1}^{N-1}\sum_{j=0}^{M-1}\left[\frac{1}{EIS_{\theta}(\theta_i,\phi_j)}+\frac{1}{EIS_{\phi}(\theta_i,\phi_j)}\right]\sin(\theta_i)}$$

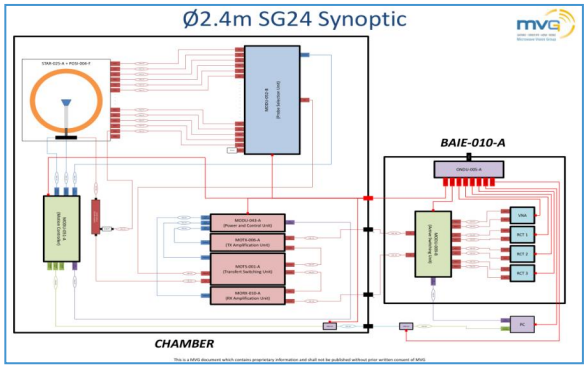

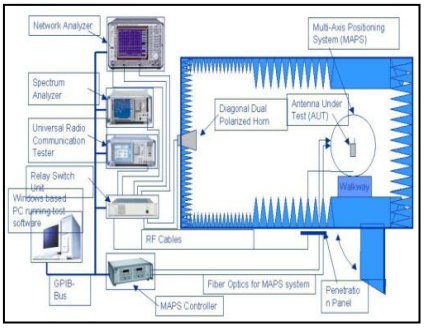

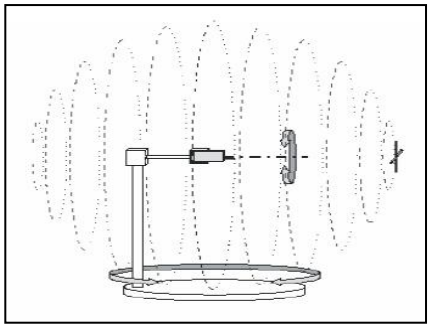

4.4 OTA TRP/TIS Test Report

WIFI AUX		Performance request	DATE	Result
2.4G WiFi_11b_CCK_11M	TRP	≥10dbm	10.16	pass
	TIS	≥-80dbm	-80.67	pass
2.4G WiFi_11g_OFDM_54M	TRP	≥9dbm	9.38	pass
	TIS	≥-67dbm	-68.22	pass
2.4G WiFi_11n_20M_MCS7	TRP	≥9dbm	9.64	pass
	TIS	≥-63dbm	-63.64	pass
5G WiFi_11a_54M	TRP	≥10dbm	10.66	pass
	TIS	≥-65dbm	-66.50	pass
5G WiFi_11n_20M_MCS7	TRP	≥9dbm	9.79	pass
	TIS	≥-63dbm	-65.98	pass

4.5 Passive Test Report

Main antenna	frequency (Mhz)	2402	2412	2422	2432	2442
efficiency	requirement	>35%	>35%	>35%	>35%	>35%
	Measured data	39.8%	46.1%	35.5%	42.4%	47.7%
	determine	pass	pass	pass	pass	pass
Main antenna	frequency (Mhz)	2452	2462	2472	2482	
efficiency	requirement	>35%	>35%	>35%	>35%	
	Measured data	40.9%	49.6%	41.5%	41.8%	
	determine	pass	pass	pass	pass	

5. structural drawings

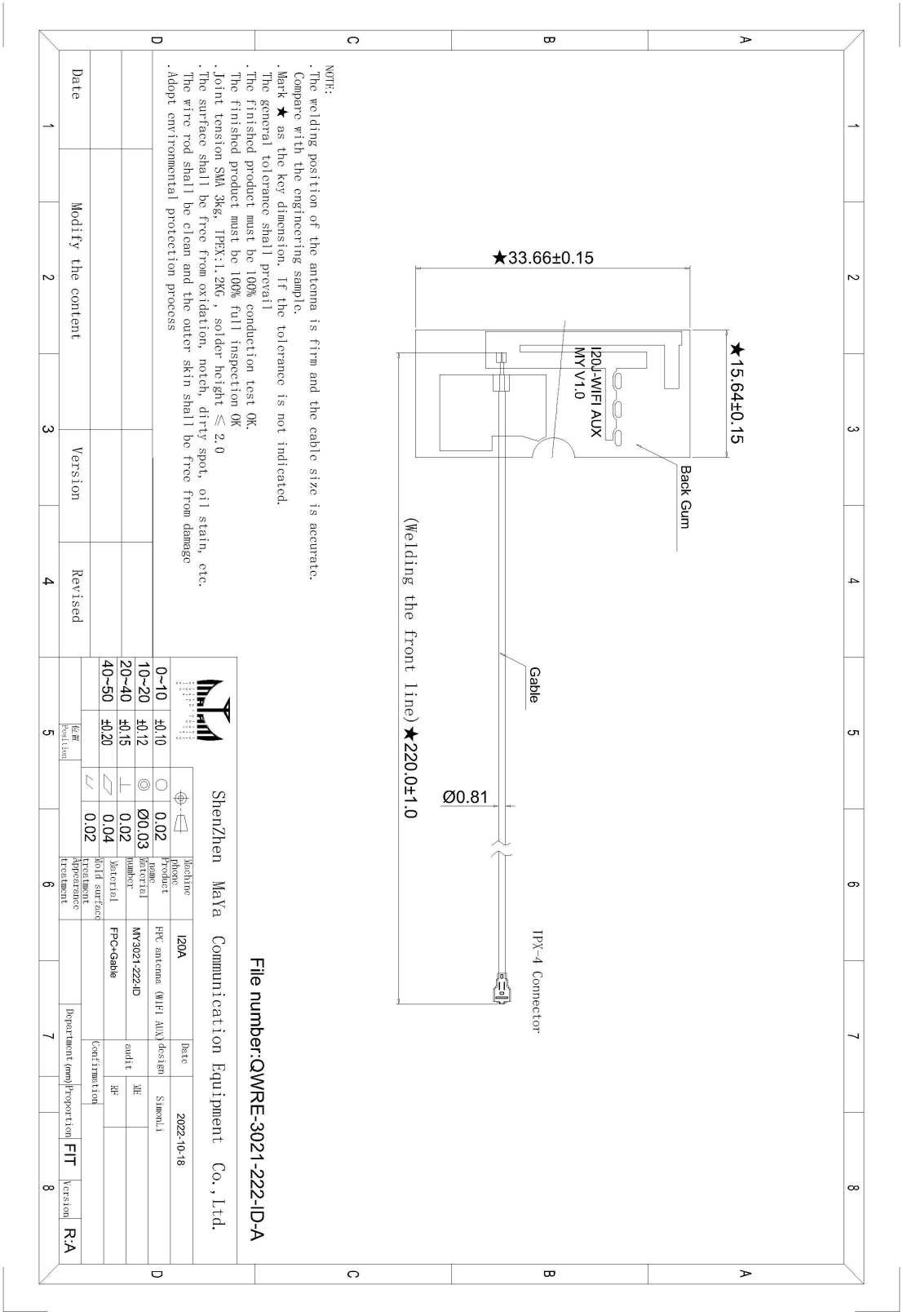

6.Warning Sign

1. The section on performance and structure validation
★Please confirm the appearance and performance of the product before you sign the acknowledgement.
★Please be sure to provide the final mass production trial production machine to our company or take back our company verification before mass production
★As the product of this acknowledgement is a highly sensitive object, please be sure to keep the testing machine for follow-up
★As this product is a custom-made object, the use of the targeted, customers in material replacement or for non-designated items, please be sure to change the material or non-designated items of the machine sent to our company to verify the radio-frequency performance, otherwise, may cause the use state and the design state inconsistent serious hidden danger, to our company sealed debugging sample function confirmation, ensure our company debugging sample function completely normal, prevent function abnormal to the antenna performance error caused by the antenna performance
2. About product storage
★As this product has printing ink on the surface, adhesive on the back and electroplate, please make sure the temperature is between 23 ° c-27 ° C and the relative humidity is below 60% during storage or transportation, no strong acid, no sulfur, no oxygen storage or transport environment
★As the product back glue on the environment requirements are more stringent, please customers must be received after the product, in the product quality guarantee period to ensure the reliability of the product
3. Tips for using the product
★Due to the special structure of this product, please use this product must be in full contact with the pasted objects, and pasted objects must not be residual chemicals (release agent, etc.) or as far as possible do not use the raw materials with release agent, to ensure that the product is in good working condition, please clean the surface of the pasted article before using the product to ensure that there is no chemical residue on the surface of the pasted article
4. Statement of Quality Assurance for this product
★This product quality guarantee period is 12 months, if your use and storage environment to meet the above requirements, in the valid guarantee period of any quality problems, and determined that our products are abnormal, our company can provide free replacement services, after 12 months, our products provide life-long consultation and paid replacement services
★This product is a special custom device, please receive the product must within 3 working days of the product quantity confirmation

Product specification acknowledgment.

Shenzhen Maya antenna lab

R&D center in ShenZhen

The mobile communication terminal antenna

PRODUCT NAME I20A WIFI MAIN

CUSTOMER NAME 亿道信息

account party	Development party		
Customer acknowledges	Quality Department	R&D Department	approved by
	夏兵	ME：黎文明 RF：朱强清	冯国军
Date： 年 月 日	Date： 2023 年 2 月 13 日		

Shenzhen Maya communication equipment Co., LTD
Site：A second floor, minqing road, minqing road, longhua street, baoan district, shenzhen city.
Tel: 86-755-82916162 Fax: 86-755-82916227

1. aim

For the Production from shenzhen maya communication equipment co., LTD. That mobile communication terminal antenna product specifications and test methods for specification, avoid the test conditions, the error caused by different methods

2.Antenna debug design requirement frequency band.

frequency	frequency band
Two in one	2.4/5.8G WIFI

3.Product cell phone and sky chart.

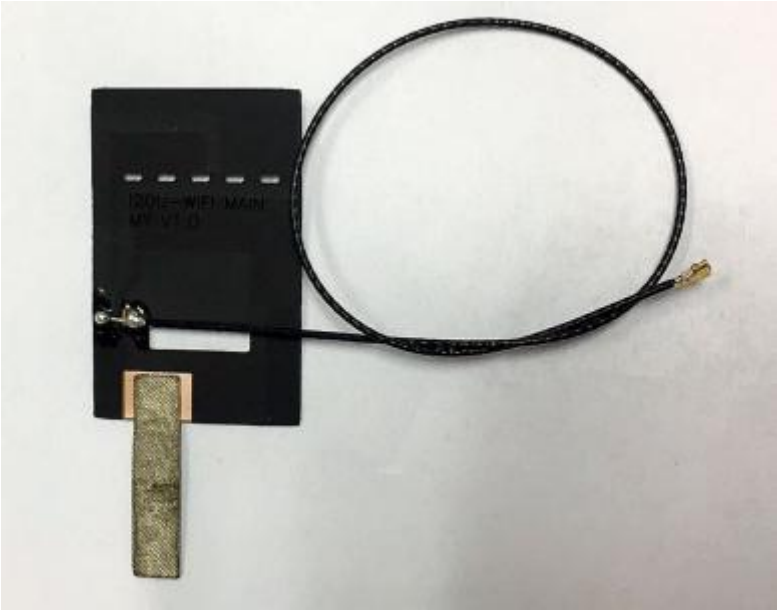

WIFI MAIN

4.electrical

4.1Test method description and data.

Device name	use
Vector Network Analyzer	S11/Impedance/ Passive Test
Agilent 8960 SP6010 R&S CMU200	**GSM, GPRS, EDGE, CDMA2000, 1xev-do, td-scdma, WCDMA, HSDPA mobile phone mobile communication equipment test.**
R&S CMW500 MT8820C	**Including td-scdma, WCDMA, HSDPA, LTE, WIFI, GPS mobile phone mobile communication equipment test.**
SP9500E	**Contains 5G, SA, NSA**
Agilent E4438C	**Test active GPS**
MVG Chamber	**Passive Test / OTA active Test / Efficiency/Gain**

4.2Passive Test Report

Test equipment: network analyzer.

Test method: with a 50 ohm CABLE CABLE from the instrument test port is derived, using the calibration after a calibration mechanism of SMA connector, connecting hand records related to the frequency points corresponding return loss and standing wave ratio data.

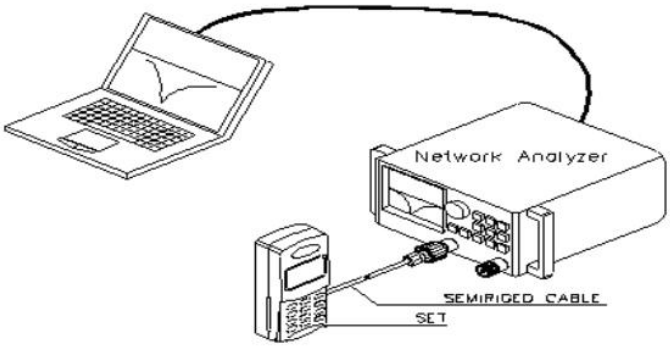

测试示意图

4.3 Active Test Report

TRP/TIS

From testing tools, measuring, network analyzer, full waves far field ETS, French MVG SG24LT (Satmio) near field 3 d microwave dark room, the high precision positioning system and its controller and the computer with automatic test procedure test environment: the temperature of 22 ℃ + 3 ℃, humidity 60% plus or minus 60% test methods: Using EST or 24 lt Satimo system software Test method and calculation of TRP when tested TRP, DUT (Device Under Test) is in a state of maximum transmitted power, including three to choose channel Test, by positioning system control the location of the DUT, with 15 degrees for step length, measuring three dimensional space, the effective radiated power (EIRP) at various points through the average of the integral sphere, computation formula is as follows

$$TRP \cong \frac{\pi}{2NM}\sum_{i=1}^{N-1}\sum_{j=0}^{M-1}\left[EiRP_{\theta}(\theta_i,\phi_j)+EiRP(\theta_i,\phi_j)\right]\sin(\theta_i)$$

In TIS test, the DUT at the maximum transmission power of the state, including three to choose channel test, by controlling the location of the DUT, at 30 degrees for the step length, measuring the three dimensional space each point receiving sensitivity, the average of the sphere by integral calculation, calculation formula is as follows:

$$TIS \cong \frac{2NM}{\pi\sum_{i=1}^{N-1}\sum_{j=0}^{M-1}\left[\frac{1}{EIS_{\theta}(\theta_i,\phi_j)}+\frac{1}{EIS_{\phi}(\theta_i,\phi_j)}\right]\sin(\theta_i)}$$

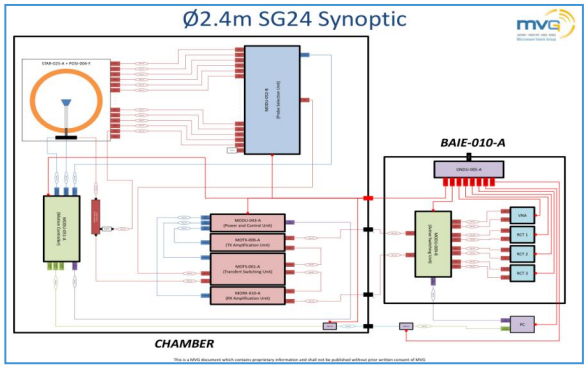

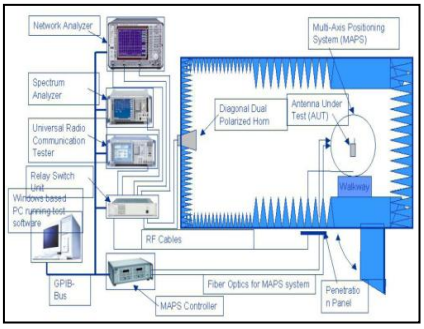

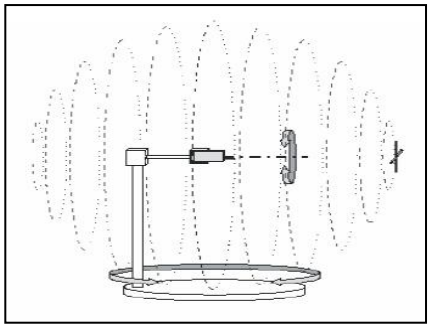

4.4 OTA TRP/TIS Test Report

MAIN WIFI		Performance request	Data	判定
2.4G WiFi_11b_CCK_11M	TRP	≥10dbm	10.19	pass
	TIS	≥-80dbm	-80.82	pass
2.4G WiFi_11g_OFDM_54M	TRP	≥9dbm	9.09	pass
	TIS	≥-67dbm	-68.04	pass
2.4G WiFi_11n_20M_MCS7	TRP	≥9dbm	9.10	pass
	TIS	≥-63dbm	-64.59	pass
5G WiFi_11a_54M	TRP	≥10dbm	10.73	pass
	TIS	≥-65dbm	-66.95	pass
5G WiFi_11n_20M_MCS7	TRP	≥9dbm	9.13	pass
	TIS	≥-63dbm	-66.01	pass

4.5 Passive Test Report

Main antenna	frequency (Mhz)	2402	2412	2422	2432	2442
efficiency	requirement	>40%	>40%	>40%	>40%	>40%
	Measured data	40.6%	40.3%	40.0%	40.4%	41.6%
	determine	pass	pass	pass	pass	pass
Main antenna	frequency (Mhz)	2452	2462	2472	2482	
efficiency	requirement	>40%	>40%	>40%	>40%	
	Measured data	42.3%	49.7%	46.2%	44.0%	
	determine	pass	pass	pass	pass	

Main antenna	frequency (Mhz)	5150	5280	5380	5480	5580
efficiency	requirement	>30%	>30%	>30%	>30%	>30%
	Measured data	33.2%	34.4%	33.1%	37.3%	29.4%
	determine	pass	pass	pass	pass	pass
Main antenna	frequency (Mhz)	5680	5780	5800		
efficiency	requirement	>30%	>30%	>30%		
	Measured data	36.7%	32.6%	32.5%		
	determine	pass	pass	pass		

5. structural drawings

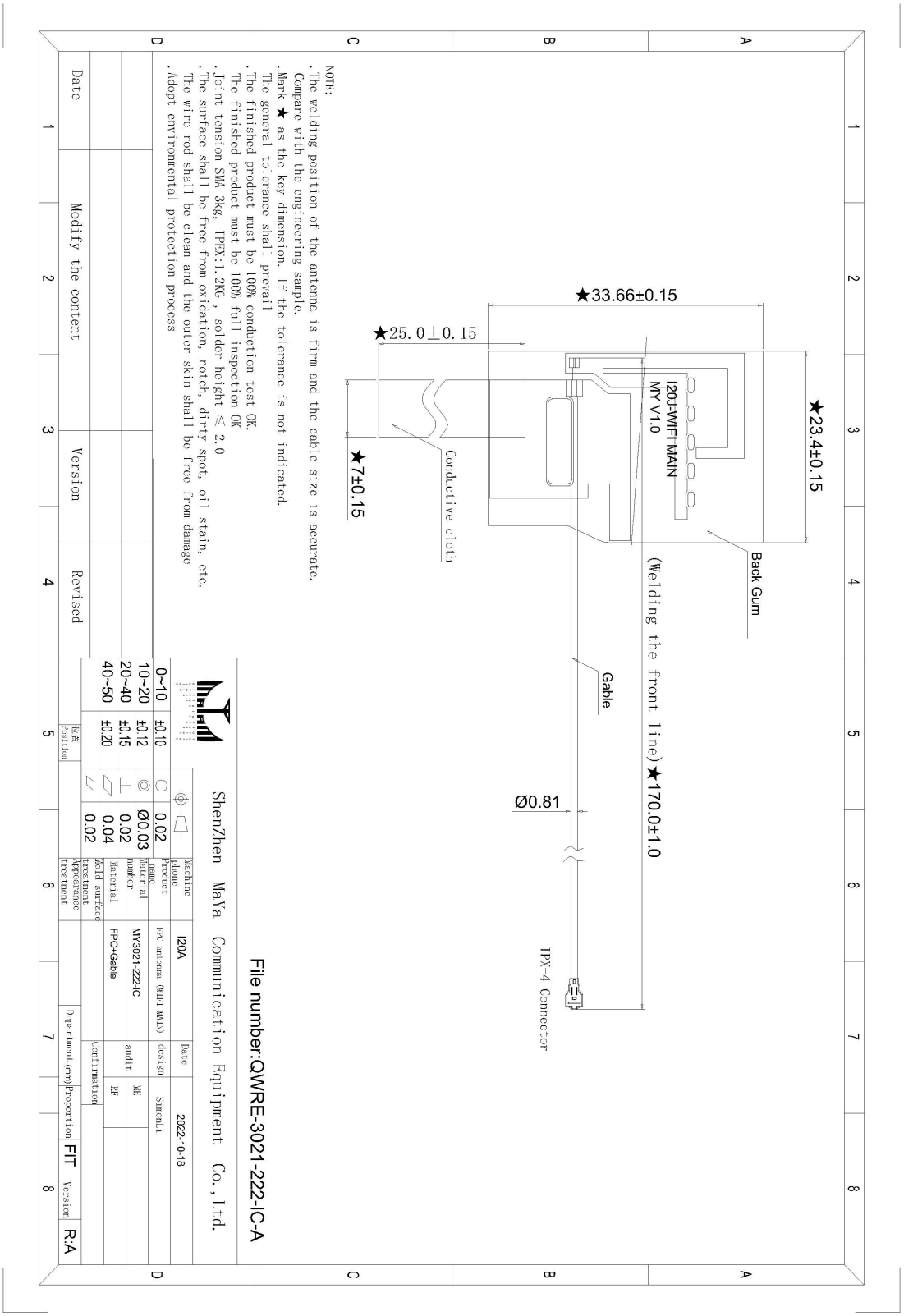

6.Warning Sign

1. The section on performance and structure validation
★Please confirm the appearance and performance of the product before you sign the acknowledgement.
★Please be sure to provide the final mass production trial production machine to our company or take back our company verification before mass production
★As the product of this acknowledgement is a highly sensitive object, please be sure to keep the testing machine for follow-up
★As this product is a custom-made object, the use of the targeted, customers in material replacement or for non-designated items, please be sure to change the material or non-designated items of the machine sent to our company to verify the radio-frequency performance, otherwise, may cause the use state and the design state inconsistent serious hidden danger, to our company sealed debugging sample function confirmation, ensure our company debugging sample function completely normal, prevent function abnormal to the antenna performance error caused by the antenna performance
2. About product storage
★As this product has printing ink on the surface, adhesive on the back and electroplate, please make sure the temperature is between 23 ° c-27 ° C and the relative humidity is below 60% during storage or transportation, no strong acid, no sulfur, no oxygen storage or transport environment
★As the product back glue on the environment requirements are more stringent, please customers must be received after the product, in the product quality guarantee period to ensure the reliability of the product
3. Tips for using the product
★Due to the special structure of this product, please use this product must be in full contact with the pasted objects, and pasted objects must not be residual chemicals (release agent, etc.) or as far as possible do not use the raw materials with release agent, to ensure that the product is in good working condition, please clean the surface of the pasted article before using the product to ensure that there is no chemical residue on the surface of the pasted article
4. Statement of Quality Assurance for this product
★This product quality guarantee period is 12 months, if your use and storage environment to meet the above requirements, in the valid guarantee period of any quality problems, and determined that our products are abnormal, our company can provide free replacement services, after 12 months, our products provide life-long consultation and paid replacement services
★This product is a special custom device, please receive the product must within 3 working days of the product quantity confirmation

AUX

1			1	
Frequency	Efficiency	Efficiency . dB	Frequency	Gain . dB
2400000000	45.35%	-3.43447	2400000000	4.453922
2410000000	45.37%	-3.43268	2410000000	4.511621
2420000000	45.49%	-3.42105	2420000000	4.609846
2430000000	47.63%	-3.22135	2430000000	4.389051
2440000000	47.51%	-3.23201	2440000000	3.842562
2450000000	47.07%	-3.27299	2450000000	3.653382
2460000000	46.64%	-3.31197	2460000000	3.236572
2470000000	46.17%	-3.3566	2470000000	2.410286
2480000000	42.75%	-3.69082	2480000000	1.729072
2490000000	38.23%	-4.17577	2490000000	1.038829
2500000000	33.39%	-4.76334	2500000000	0.414294

1			1	
Frequency	Efficiency	Efficiency . dB	Frequency	Gain . dB
5200000000	40.40%	-3.93652	5200000000	5.206078
5230000000	38.72%	-4.12095	5230000000	5.106092
5260000000	37.24%	-4.29042	5260000000	5.290713
5290000000	35.39%	-4.51063	5290000000	5.303553
5320000000	33.34%	-4.77052	5320000000	5.474254
5350000000	28.81%	-5.4052	5350000000	4.733935
5380000000	30.37%	-5.17565	5380000000	4.972924
5410000000	35.42%	-4.50724	5410000000	5.686411
5440000000	40.23%	-3.95466	5440000000	6.268077
5470000000	39.92%	-3.98859	5470000000	6.020286
5500000000	42.16%	-3.75059	5500000000	6.321595
5530000000	44.30%	-3.53618	5530000000	6.775118
5560000000	43.75%	-3.59056	5560000000	6.861033
5590000000	38.72%	-4.12054	5590000000	6.513453
5620000000	36.11%	-4.42341	5620000000	6.278468
5650000000	34.92%	-4.56968	5650000000	6.149535
5680000000	35.34%	-4.51676	5680000000	6.136548
5710000000	35.44%	-4.50526	5710000000	5.893542
5740000000	37.92%	-4.21076	5740000000	6.192244
5770000000	42.89%	-3.67627	5770000000	6.925372
5800000000	43.85%	-3.57992	5800000000	7.235432

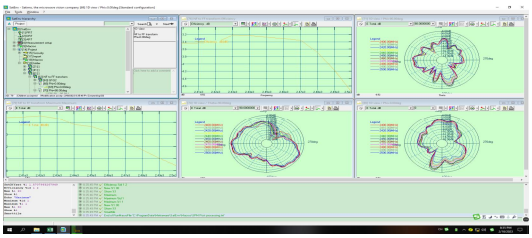

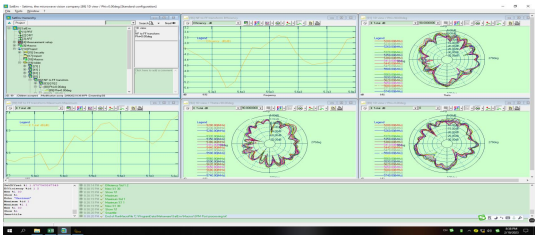

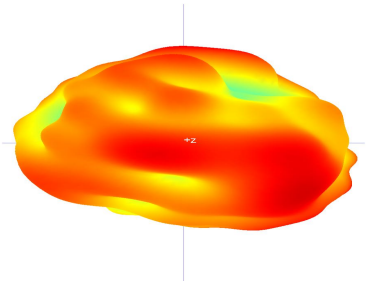

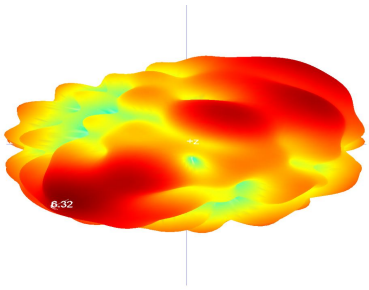

I20A MAIN

1			1	
Frequency	Efficiency	Efficiency . dB	Frequency	Gain . dB
5200000000	63.26%	-1.98898	5200000000	8.102942
5230000000	57.90%	-2.37292	5230000000	8.040015
5260000000	51.91%	-2.8473	5260000000	7.38343
5290000000	44.61%	-3.50523	5290000000	6.571906
5320000000	37.90%	-4.21328	5320000000	6.248717
5350000000	29.83%	-5.25356	5350000000	5.35953
5380000000	30.78%	-5.11749	5380000000	5.57105
5410000000	37.97%	-4.20558	5410000000	6.481935
5440000000	45.98%	-3.37408	5440000000	7.303216
5470000000	49.55%	-3.04916	5470000000	7.472153
5500000000	54.80%	-2.61234	5500000000	8.08571
5530000000	59.53%	-2.25258	5530000000	8.641558
5560000000	58.15%	-2.35432	5560000000	8.438881
5590000000	51.52%	-2.88019	5590000000	8.077433
5620000000	48.21%	-3.16836	5620000000	7.805841
5650000000	45.63%	-3.4074	5650000000	7.194089
5680000000	45.47%	-3.42244	5680000000	7.121246
5710000000	44.81%	-3.48602	5710000000	6.976895
5740000000	47.35%	-3.24648	5740000000	7.214335
5770000000	53.93%	-2.68167	5770000000	7.943004
5800000000	54.92%	-2.60302	5800000000	7.957125
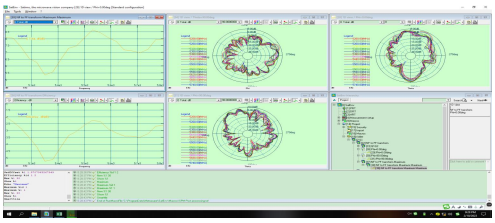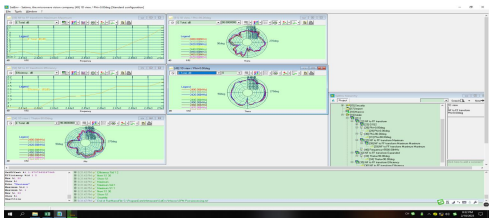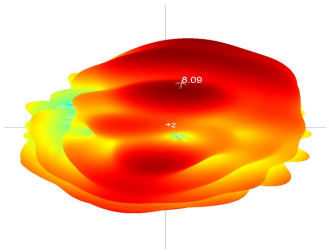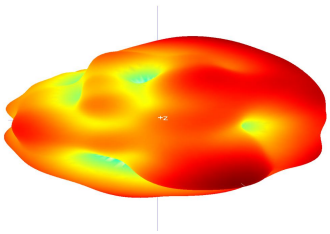
1			1	
Frequency	Efficiency	Efficiency . dB	Frequency	Gain . dB
2400000000	38.63%	-4.13054	2400000000	0.997866
2410000000	38.32%	-4.16617	2410000000	1.138144
2420000000	38.33%	-4.1643	2420000000	0.942137
2430000000	40.73%	-3.90088	2430000000	0.970171
2440000000	41.58%	-3.81064	2440000000	1.150689
2450000000	41.77%	-3.79119	2450000000	1.130952
2460000000	42.55%	-3.71073	2460000000	1.021862
2470000000	44.49%	-3.51736	2470000000	1.194547
2480000000	44.50%	-3.51649	2480000000	1.48861
2490000000	44.54%	-3.51245	2490000000	1.748258
2500000000	45.98%	-3.37441	2500000000	2.121225