S28 Module Datasheet

AIOT Wi-Fi/Bluetooth Combo Module

Version: V1.6

Linkplay Confidential

Table of contents

1 General Description 3
1.1 Introduction 3
1.2 Description 3
1.3 EVB information 3
2 Features 4
3 General Specification 5
3.1 Wi-Fi 2.4GHz Specification 5
3.2 Wi-Fi 5GHz Specification 6
3.3 Bluetooth Specification 7
4 Block Diagram 8
5 ID setting information 8
6 Pin Definition 8
6.1 Pin Outline 9
6.2 Pin Definition details 9
7 Electrical Specifications 13
7.1 Absolute Maximum Ratings Note4 13
7.2 Operating Conditions 13
7.3 Power consumption 13
8 Size reference 14
8.1 Module Picture 14
8.2 Marking Description 14
8.3 Physical Dimensions 15
8.4 Layout Recommendation 16
9 Recommended Reflow Profile 17
10 FCC/IC Warning 18
11 Revision History 22

Linkplay Confidential

1 General Description

1.1 Introduction

S28 is a highly integrated wireless module with voice & audio functions. It is based on BES2600 solution which features a Cortex-M33 Star dual-core MCU subsystem and a Cortex-A7 dual-core AP subsystem. Both MCU and AP subsystem are able to run RTOS and user applications, and the crystal of X1(24MHz) provides the clock.

The module supports low power Wi-Fi 4 (1x1 802. 11a/b/g/n dual-band) and Bluetooth 5.3). Besides, it provides a high-performance on-board printing antenna to reduce the complexity of hardware design.

S28 also provides a voice & audio CODEC subsystem and a display subsystem with 2D graphics engine. It supports MIPI DSI HD display up to HD (720P60), supports MIPI CSI Camera up to 2MPixel, and supports microphone arrays with up to three analog microphones or six digital microphones for far-field voice application. MCU subsystem runs Bluetooth upper protocol stack, and AP subsystem and 2D hardware Graphics Engine can accelerate GUI & VUI, voice & audio processing and AI tasks.

This compact module is a perfect choice for smart appliance, smart panel, entrance guard and other smart home applications.

1.2 Description

Model Name	S28
Product Description	Support Wi-Fi & Bluetooth, voice & audio, LCD & camera
Dimension	L x W x H: 28 x 20 x2.55 mm
Interface	USB2.0, UART, I2C, I2S, SDIO device, MIPI, PWM, GPIO
OS	RTOS, OpenHarmony
Operating temperature	Commercial: -20°C to 80°C
Storage temperature	-55°C to 125°C

1.3 EVB information

Linkplay provides a evaluation suite for the development and test of S28 module.

Please contact Linkplay sales for EVB documentation and ordering.

Linkplay Confidential

2 Features

CPU

- CMOS single-chip fully-integrated PMU, CODEC, RF, BB, MCU and AP subsystem
- 300MHz ARM Cortex-M33 Star dual-core MCU subsystem
- 1GHz ARM Cortex-A7 dual-core AP subsystem with NEON.
- Shared 2MB SRAM, on-chip PSRAM and on-chip NOR flash[Note1]
- Support TrustZone and secure boot

Wi-Fi / BT

- 2.4GHz & 5GHz dual-band Wi-Fi, 1T1R, compliant to IEEE 802. 11a/b/g/n
- Support 20MHz and 40MHz bandwidth
- Bluetooth 5.3
- Support BLE Mesh and LE audio
- A2DP v1.3/AVRCP v1.5/HFP v1.6
- Wi-Fi and Bluetooth co-existence

Audio

- Hi-Fi Stereo Audio DAC and ADC
- Far-field voice wake up
- 24bit audio processing
- Support Acoustic Echo Cancellation
- Support DSD-64/ 128/256 decode

Peripheral interfaces

- MIPI Tx DSI and MIPI Rx CSI interface
- USB2.0 HS Host or Device
- 4x UART interface, with flow control and configurable baud rate
- 50Mbps SPIx2, with serial LCD support
- 1.4Mbps I2C master x3
- I2S/TDM
- PWMx8
- 10-bit GPADC, 3 channels

Note1: Please refer to ordering information for detailed memory size.

Linkplay Confidential

3 General Specification

3.1 Wi-Fi 2.4GHz Specification

Feature	Description	
WLAN Standard	IEEE 802. 11 b/g/n Wi-Fi compliant	
Frequency Range	2.400GHz ~ 2.4835GHz (2.4GHz ISM Band)	
Number of Channels	2.4GHz：Ch 1 ~ Ch 14	
Test Items	**Typical Value**	**EVM**
Output Power	802. 11b /11Mbps : 17 ± 2 dBm	EVM ≤ - 10dB
	802. 11g /54Mbps : 16 ± 2 dBm	EVM ≤ -25dB
	802. 11n /MCS7 : 15 ± 2 dBm	EVM ≤ -28dB
Spectrum Mask	Meet with IEEE standard	
Freq. Tolerance	±20ppm	
SISO Receive Sensitivity (11b) @8% PER	- 1Mbps PER @ -95 dBm	
	- 11Mbps PER @ -86 dBm	
SISO Receive Sensitivity (11g) @10% PER	- 6Mbps PER @ -88 dBm	
	- 54Mbps PER @ -73 dBm	
SISO Receive Sensitivity (11n,20MHz) @10% PER	- MCS=0 PER @ -88 dBm	
	- MCS=7 PER @ -70 dBm	
SISO Receive Sensitivity (11n,40MHz) @10% PER	- MCS=0 PER @ -85 dBm	
	- MCS=7 PER @ -66 dBm	
Maximum Input Level	802. 11b : -8 dBm	
	802. 11g/n : -20 dBm	

Linkplay Confidential

3.2 Wi-Fi 5GHz Specification

Feature	Description	
WLAN Standard	IEEE 802. 11 a/n Wi-Fi compliant	
Frequency Range	5. 18GHz ~ 5.825GHz	
Number of Channels	Please refer to table[1]	
Test Items	**Typical Value**	**EVM**
	802. 11a /54Mbps : 15 ± 2 dBm	EVM ≤ -25dB
	802. 11n /MCS7 : 14 ± 2 dBm	EVM ≤ -28dB
Spectrum Mask	Meet with IEEE standard	
Freq. Tolerance	±20ppm	
SISO Receive Sensitivity (11a) @10% PER	- 6Mbps PER @ -87 dBm	
	- 54Mbps PER @ -70 dBm	
SISO Receive Sensitivity (11n,20MHz) @10% PER	- MCS=0 PER @ -86 dBm	
	- MCS=7 PER @ -68 dBm	
SISO Receive Sensitivity (11n,40MHz) @10% PER	- MCS=0 PER @ -83 dBm	
	- MCS=7 PER @ -65 dBm	
Maximum Input Level	802. 11a : -20 dBm	
	802. 11n : -20 dBm	

5GHz(20MHz) Channel table

Band range	Operating Channel	Channel center frequency (MHz)
5180MHz~5240MHz	36	5180
	40	5200
	44	5220
	48	5240
5260MHz~5320MHz	52	5260
	56	5280
	60	5300
	64	5320
5550MHz~5700MHz	100	5500
	104	5520
	108	5540
	112	5560
	116	5580

Linkplay Confidential

	120	5600
	124	5620
	128	5640
	132	5660
	136	5680
	140	5700
5745MHz~5825MHz	149	5745
	153	5765
	157	5785
	161	5805
	165	5825

3.3 Bluetooth Specification

Feature	**Description**		
General Specification			
Bluetooth Standard	Bluetooth V5.3		
Frequency Band	2402 MHz ~ 2480 MHz		
Number of Channels	40 channels for BLE		
Modulation	GFSK		
RF Specification			
	Min.	**Typical.**	**Max.**
Output Power - BLE		8dBm	
Sensitivity @ BER=0. 1% for GFSK (1Mbps)		-91dBm	
Sensitivity @ PER < 30.8% for BLE		-90dBm	
Maximum Input Level	GFSK (1Mbps):-20dBm		

Linkplay Confidential

4 Block Diagram

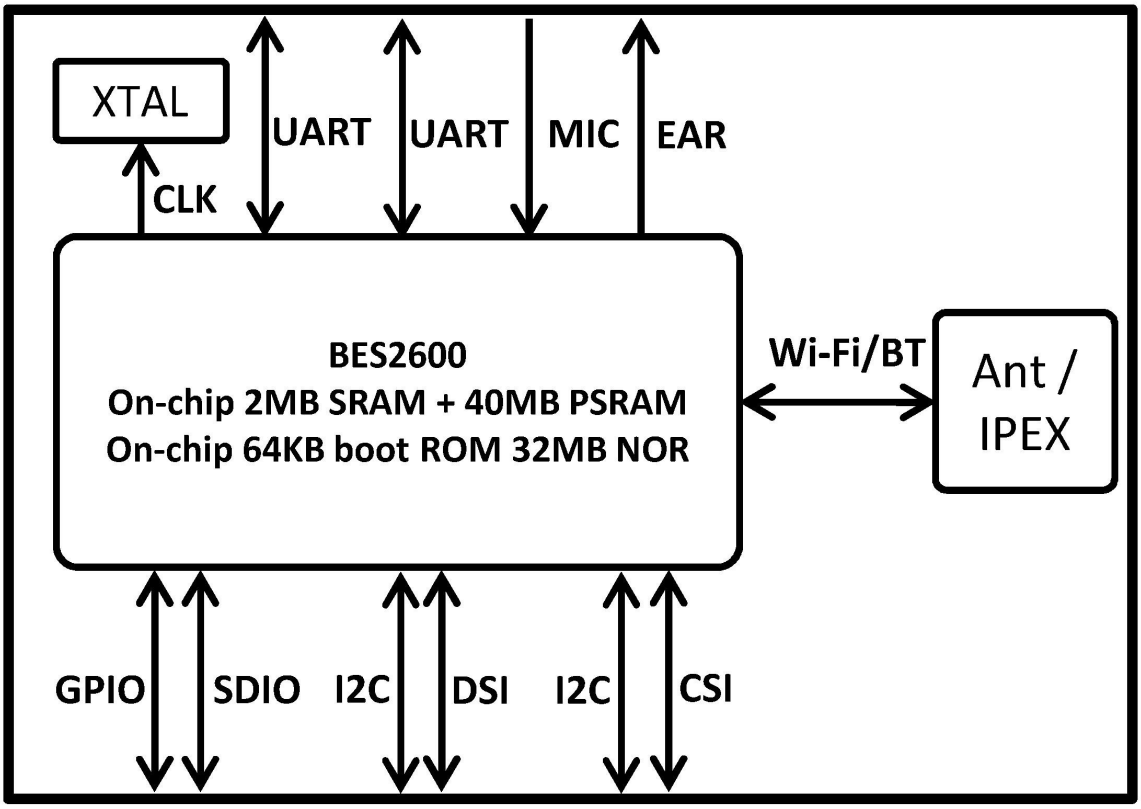

5 ID setting information

TBD.

6 Pin Definition

6.1 Pin Outline

< TOP VIEW >

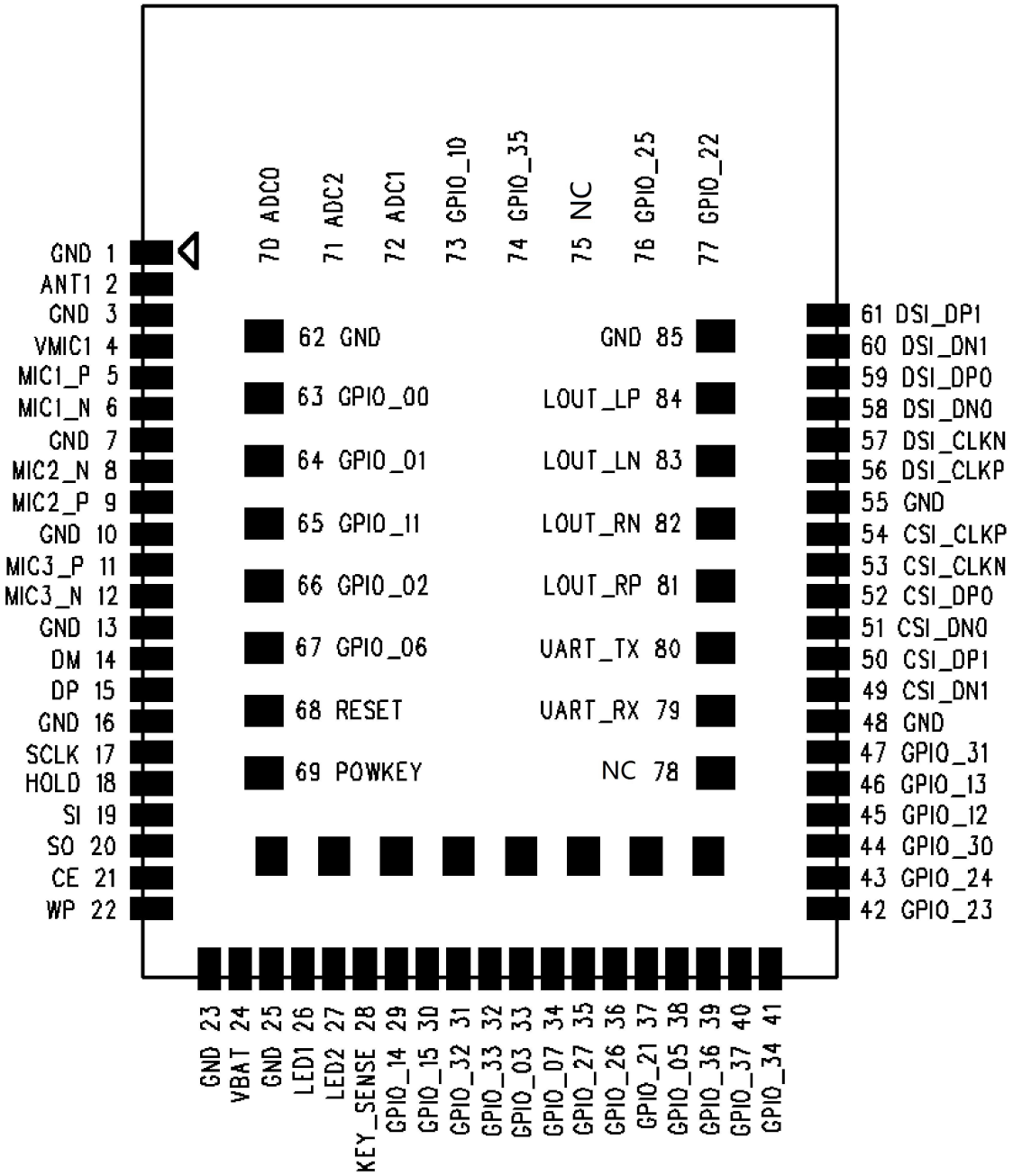

6.2 Pin Definition details

NO	Name	Type	Description	Voltage
1	GND	-	Ground connections	

2	ANT1 Note2	Analog	Optional Wi-Fi&BT Antenna port, for external antenna	
3	GND	-	Ground connections	
4	VMIC1	Analog	Bias voltage output for external MIC devices. Output range 1.5~3.3V. Suggest 1uF decoupling capacitor and RC filter.	
5	MIC1_P	Analog	MIC1 P port, maximum input voltage 1.8V (P to GND), pin requires blocking capacitor.	
6	MIC1_N	Analog	MIC1 N port, maximum input voltage 1.8V (P to GND), pin requires blocking capacitor.	
7	GND	-	Ground connections	
8	MIC2_N	Analog	MIC2 N port, please refer to the description of MIC1	
9	MIC2_P	Analog	MIC2 P port, please refer to the description of MIC1	
10	GND	-	Ground connections	
11	MIC3_P	Analog	MIC3 P port, please refer to the description of MIC1	
12	MIC3_N	Analog	MIC3 N port, please refer to the description of MIC1	
13	GND	-	Ground connections	
14	DM	Analog	USB2.0 D-, support high speed and full speed	
15	DP	Analog	USB2.0 D+, support high speed and full speed	
16	GND	-	Ground connections	
17	SCLK	I/O	External Flash serial clock	1.8V
18	HOLD	I/O	External Flash Hold	1.8V
19	SI	I/O	External Flash serial input	1.8V
20	SO	I/O	External Flash serial output	1.8V
21	CE	I/O	External Flash Chip Enable	1.8V
22	WP	I/O	External Flash Write Protect	1.8V
23	GND	-	Ground connections	
24	VBAT	Analog	VBAT power supply input, range 3.1~5.5V, typically 3.8V. This pin requires external filter capacitor.	
25	GND	-	Ground connections	
26	LED1	O	LED pin, PMU peripheral IO. Suggest cathode drive mode. Maximum sink current 5mA. Internally PU by default,	
27	LED2	O	LED pin, please refer to the description of LED1.	
28	KEY_SENSE	I/O	Keypad sense pin, 10-bit ADC input with interrupt function. Max. measurable voltage 1.7V. Max. input voltage 2.5V.	
29	GPIO_14	I/O	GPIO, please refer to GPIO MUX Mapping for details	VDDIO Note3
30	GPIO_15	I/O	GPIO, please refer to GPIO MUX Mapping for details	VDDIO
31	GPIO_32	I/O	GPIO, please refer to GPIO MUX Mapping for details	VDDIO

Linkplay Confidential

32	GPIO_33	I/O	GPIO, please refer to GPIO MUX Mapping for details	VDDIO
33	GPIO_03	I/O	GPIO, please refer to GPIO MUX Mapping for details	VDDIO
34	GPIO_07	I/O	GPIO, please refer to GPIO MUX Mapping for details	VDDIO
35	GPIO_27	I/O	GPIO, please refer to GPIO MUX Mapping for details	VDDIO
36	GPIO_26	I/O	GPIO, please refer to GPIO MUX Mapping for details	VDDIO
37	GPIO_21	I/O	GPIO, please refer to GPIO MUX Mapping for details	VDDIO
38	GPIO_05	I/O	GPIO, please refer to GPIO MUX Mapping for details	VDDIO
39	GPIO_36	I/O	GPIO, please refer to GPIO MUX Mapping for details	VDDIO
40	GPIO_37	I/O	GPIO, please refer to GPIO MUX Mapping for details, low-level cathode drive is not recommended,	VDDIO
41	GPIO_34	I/O	GPIO, please refer to GPIO MUX Mapping for details	VDDIO
42	GPIO_23	I/O	GPIO, please refer to GPIO MUX Mapping for details	VDDIO
43	GPIO_24	I/O	GPIO, please refer to GPIO MUX Mapping for details	VDDIO
44	GPIO_30	I/O	GPIO, please refer to GPIO MUX Mapping for details	VDDIO
45	GPIO_12	I/O	GPIO, please refer to GPIO MUX Mapping for details	VDDIO
46	GPIO_13	I/O	GPIO, please refer to GPIO MUX Mapping for details	VDDIO
47	GPIO_31	I/O	GPIO, please refer to GPIO MUX Mapping for details	VDDIO
48	GND	-	Ground connections	
49	CSI_DN1	I/O	CMOS sensor interface , Channel 1_DATA_Negative	
50	CSI_DP1	I/O	CMOS sensor interface , Channel 1_DATA_Positive	
51	CSI_DN0	I/O	CMOS sensor interface , Channel0_DATA_Negative	
52	CSI_DP0	I/O	CMOS sensor interface , Channel0_DATA_Positive	
53	CSI_CLKN	I/O	CMOS sensor interface , Channel_Clock_Negative	
54	CSI_CLKP	I/O	CMOS sensor interface , Channel_Clock_Positive	
55	GND	-	Ground connections	
56	DSI_CLKP	I/O	Display sensor interface , Channel_Clock_Positive	
57	DSI_CLKN	I/O	Display sensor interface , Channel_Clock_Negative	
58	DSI_DN0	I/O	Display sensor interface , Channel0_DATA_Negative	
59	DSI_DP0	I/O	Display sensor interface , Channel0_DATA_Positive	
60	DSI_DN1	I/O	Display sensor interface , Channel 1_DATA_Negative	
61	DSI_DP1	I/O	Display sensor interface , Channel 1_DATA_Positive	
62	GND	-	Ground connections	
63	GPIO_00	I/O	GPIO, please refer to GPIO MUX Mapping for details	VDDIO
64	GPIO_01	I/O	GPIO, please refer to GPIO MUX Mapping for details	VDDIO
65	GPIO_11	I/O	GPIO, please refer to GPIO MUX Mapping for details	VDDIO
66	GPIO_02	I/O	GPIO, please refer to GPIO MUX Mapping for details	VDDIO

Linkplay Confidential

67	GPIO_06	I/O	GPIO, please refer to GPIO MUX Mapping for details	VDDIO
68	RESET	I	Hardware reset input, active high. Keep it > 2/3*VBAT for more than 250ms to achieve a reset.	VBAT
69	POWKEY	I	Hardware power on input, active high. Keep it > 2/3*VBAT for more than 1ms (software configurable).Pull up to VBAT with 100Kohm if not use.	VBAT
70	ADC0	Analog	ADC channel 0 input, 10-bit, does not support interrupt function. Max. measurable voltage 1.7V. Max. input voltage 2.5V.	
71	ADC2	Analog	ADC channel 2 input, 10-bit, does not support interrupt function. Max. measurable voltage 1.7V. Max. input voltage 2.5V.	
72	ADC1	Analog	ADC channel 1 input, 10-bit, does not support interrupt function. Max. measurable voltage 1.7V. Max. input voltage 2.5V.	
73	GPIO_10	I/O	GPIO, please refer to GPIO MUX Mapping for details	VDDIO
74	GPIO_35	I/O	GPIO, please refer to GPIO MUX Mapping for details	VDDIO
75	NC		**Please keep it floating**	
76	GPIO_25	I/O	GPIO, please refer to GPIO MUX Mapping for details	VDDIO
77	GPIO_22	I/O	GPIO, please refer to GPIO MUX Mapping for details	VDDIO
78	NC		**Please keep it floating**	
79	UART_RX	I	UART0 input, for FW download and debug	VDDIO
80	UART_TX	O	UART0 output, for FW download and debug	VDDIO
81	LOUT_RP	Analog	Channel right differential drive output p port. It is recommended to reserve filter circuit and ESD protector.	
82	LOUT_RN	Analog	Channel right differential drive output n port. It is recommended to reserve filter circuit and ESD protector.	
83	LOUT_LN	Analog	Channel left differential drive output n port. It is recommended to reserve filter circuit and ESD protector.	
84	LOUT_LP	Analog	Channel left differential drive output p port. It is recommended to reserve filter circuit and ESD protector.	
85	GND	-	Ground connections	

Note2: Use on-board antenna by default. Please contact Linkplay ifyou prefer external antenna.

Note3: VDDIO = 3.3V by default.

Linkplay Confidential

7 Electrical Specifications

7.1 Absolute Maximum Ratings[Note4]

Symbol	Description	Min.	Typ.	Max.	Unit
T_A	Ambient Temperature	-20		80	C
V_{BAT}	Supply Voltage			5.5	V
V_{IN}	IO Input Voltage	-0.3		VDDIO+0.3	V
I_{IN}	IO Input Current	- 10		10	mA
V_{LNA}	LNA Input Level			0	Bm

Note4: Stresses beyond those listed absolute maximum ratings may cause permanent damage to the device. These are stress ratings only, and functional operations of the device at these or any other conditions beyond those indicated under recommended operating conditions is not implied. Exposure to absolute-maximum-rated conditions for extended periods may affect device reliability.

7.2 Operating Conditions

Symbol	Description	Min.	Typ.	Max.	Unit
T_A	Ambient Temperature	-20	25	80	C
V_{BAT}	Supply Voltage	3.1	3.8	5.5	V
V_{IL}	CMOS Low Level Input Voltage	0		0.3*VDDIO[Note5]	V
V_{IH}	CMOS High Level Input Voltage	0.7*VDDIO		VDDIO	V
V_{OL}	IO Low level Output Voltage			0. 1*VDDIO	V
V_{OH}	IO High level Output Voltage	0.9*VDDIO			V
V_{TH}	CMOS Threshold Voltage		0.5*VDDIO		V

Note5: VDDIO=3.3V by default.

7.3 Power consumption

Test Condition	State	Consumption Avg. (mA)	
		Throughput Tx	Throughput Rx
	Standby	92	
	2.4G 11b 11M	375	172

Linkplay Confidential

Throughput state V_{BAT}=3.8V	2.4G 11g 54M	298	173
	2.4G 11n HT20	275	160
	2.4G 11n HT40	226	165
	5.8G 11a 54M	279	173
	5.8G 11n HT20	271	170
	5.8G 11n HT40	222	172

Note6 ： Above consumption data are tested at Wi-Fi (STA mode) throughput state with BT on. Moreover, a much higher current spike may occur while module initializing, so please make sure I_{PEAK} of V_{BAT} supply is more than 1.5A.

8 Size reference

8.1 Module Picture

L: 28 (+0.3/-0.1) mm **W: 20 (+/-0.1)mm**	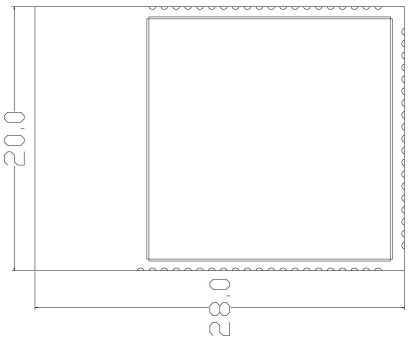
H: 2.55 (±0.2) mm	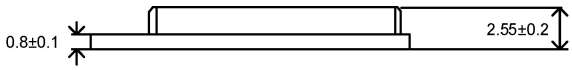
Weight	**2.2g**

8.2 Marking Description

Linkplay Confidential

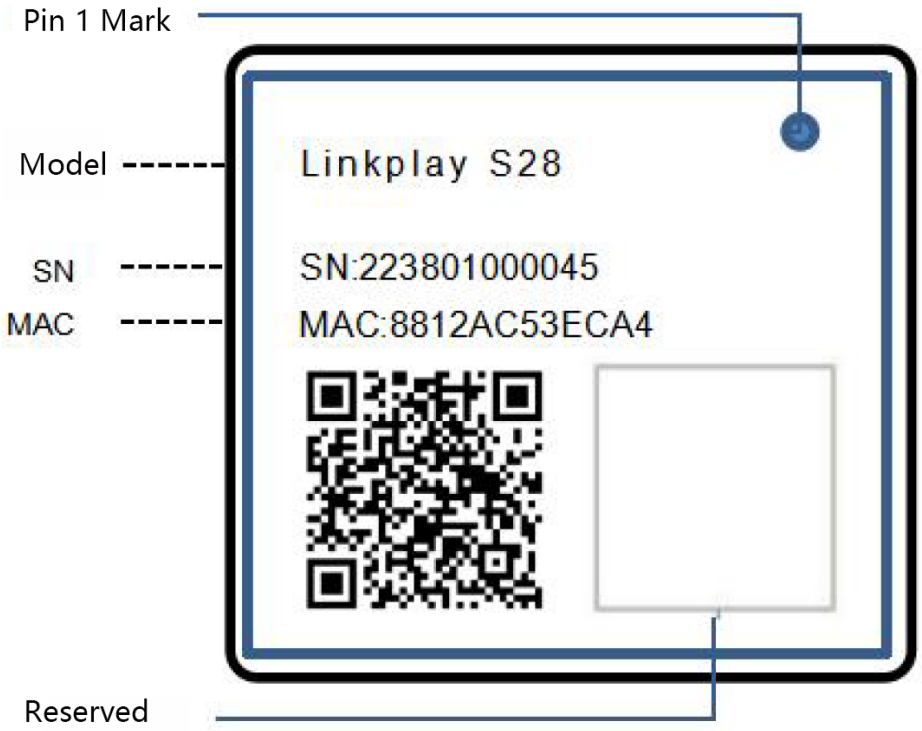

Linkplay Confidential

8.3 Physical Dimensions

<TOP View> unit:mm

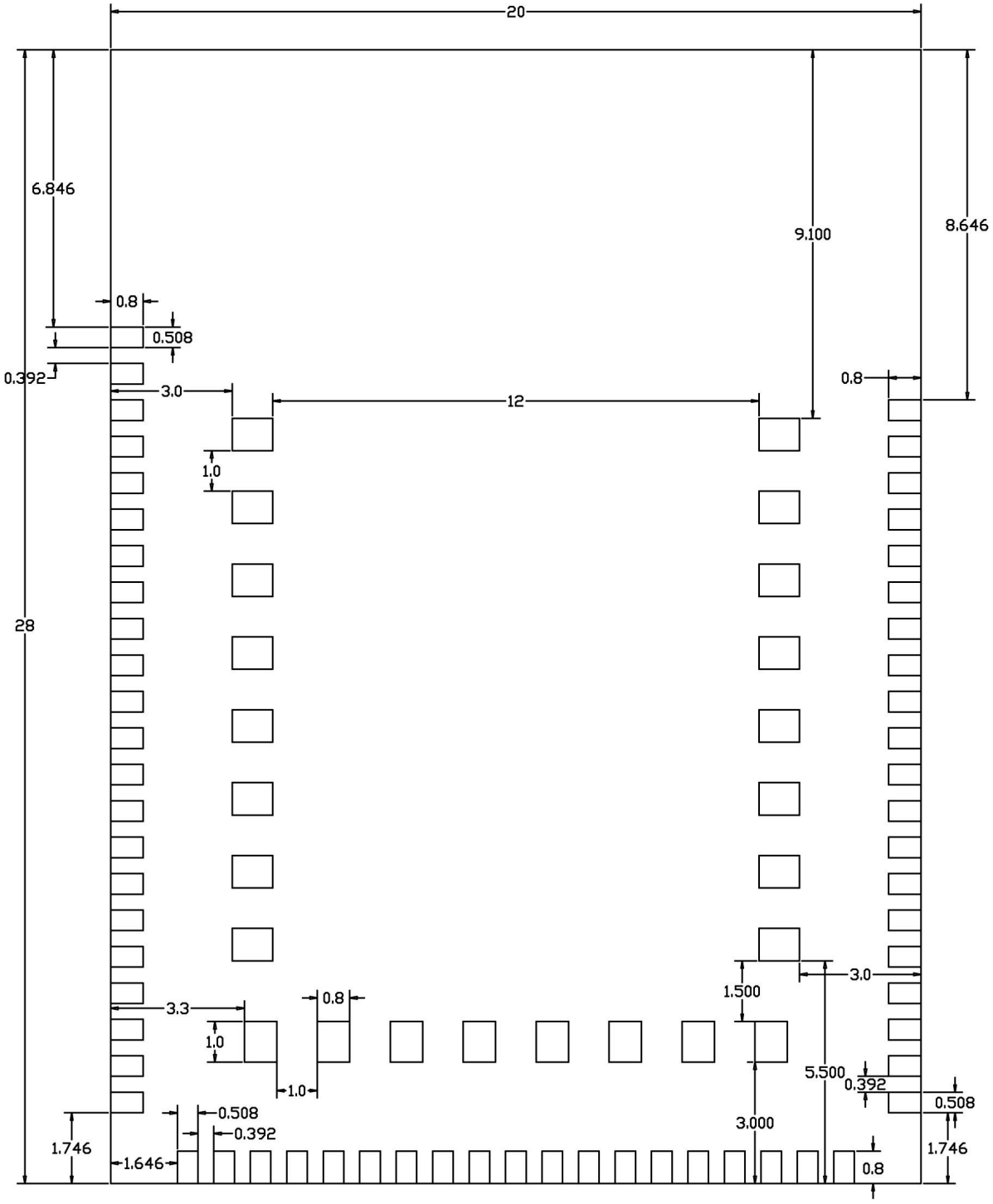

8.4 Layout Recommendation

<TOP View> unit:mm

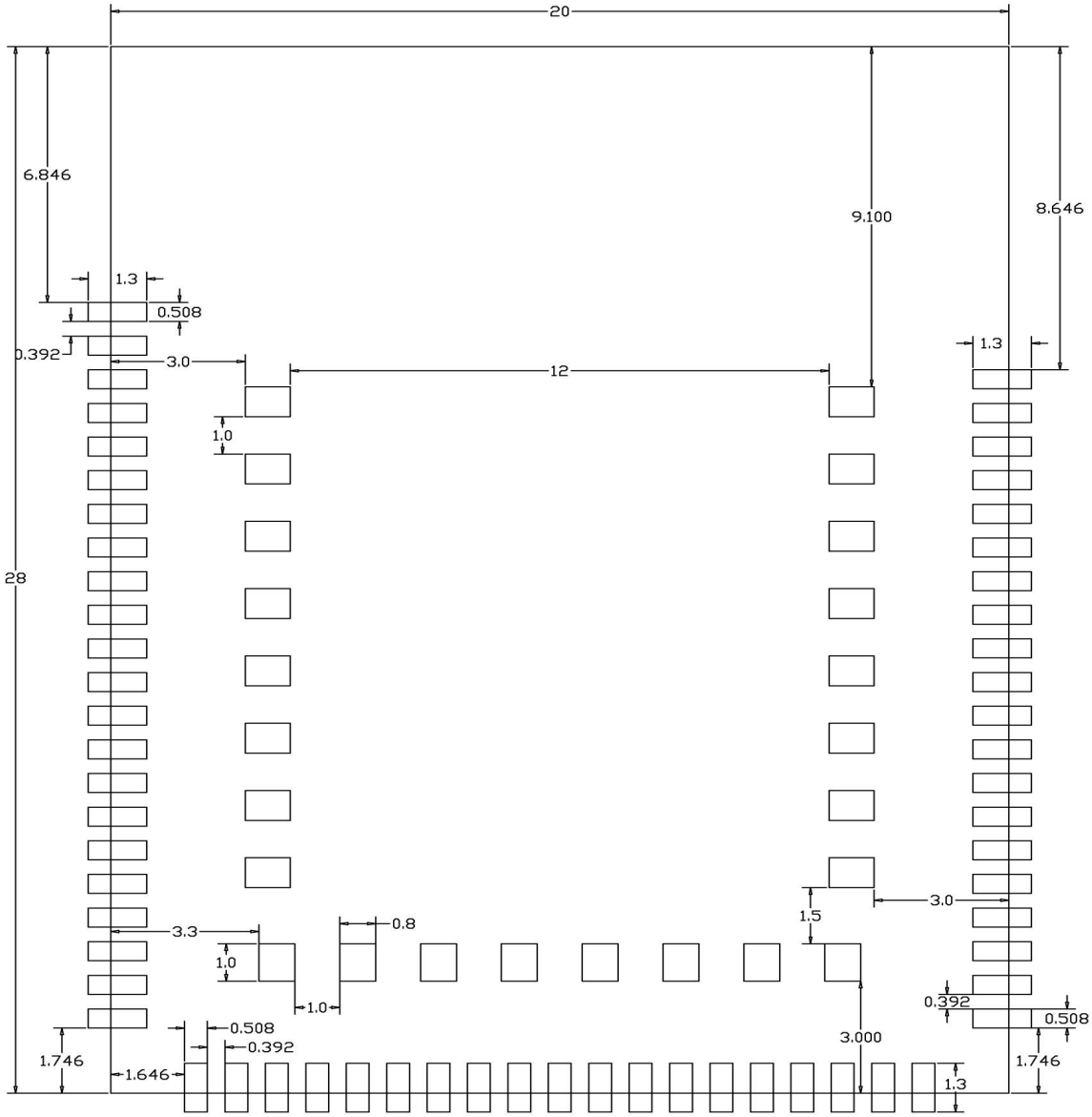

9 Recommended Reflow Profile

Referred to IPC/JEDEC standard.

Peak Temperature : <260°C

Number of Times : ≤ 2 times

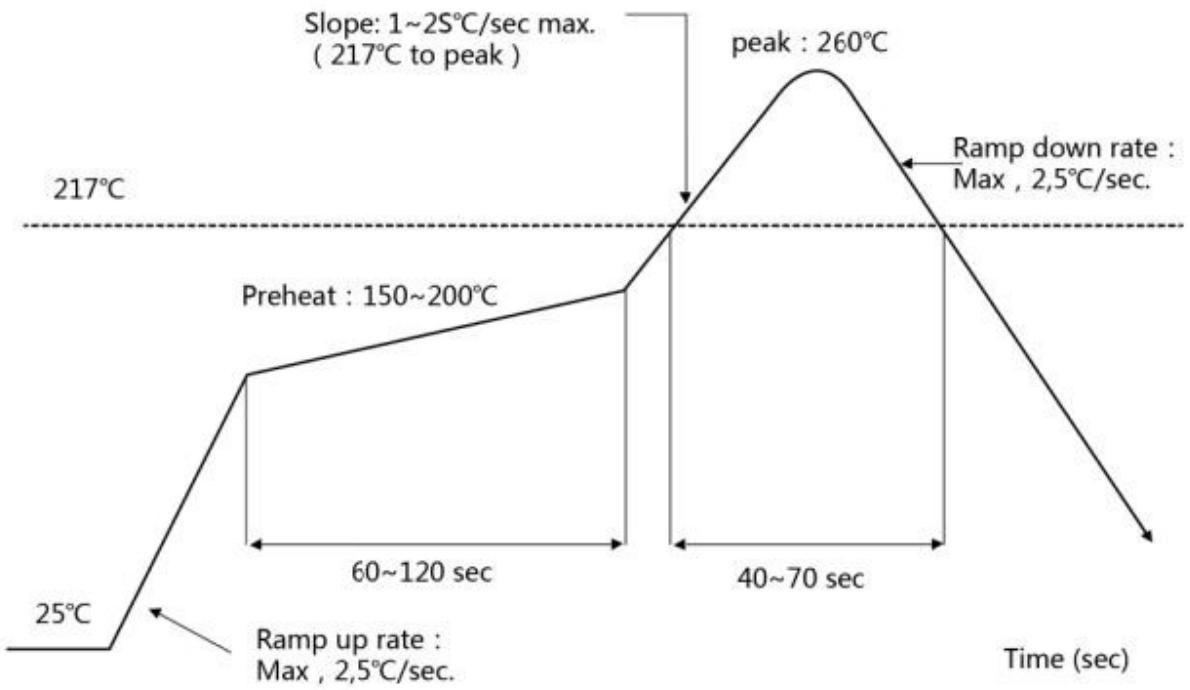

10 FCC/IC Warning

FCC Warning

This device complies with part 15 of the FCC Rules. Operation is subject to the following two conditions:(1) This device may not cause harmful interference, and (2) this device must accept any interference received, including interference that may cause undesired operation.

Any Changes or modifications not expressly approved by the party responsible for compliance could void the user's authority to operate the equipment.

This equipment has been tested and found to comply with the limits for a Class B digital device, pursuant to part 15 of the FCC Rules. These limits are designed to provide reasonable protection against harmful interference in a residential installation. This equipment generates uses and can radiate radio frequency energy and, if not installed and used in accordance with the instructions, may cause harmful interference to radio communications. However, there is no guarantee that interference will not occur in a particular installation. If this equipment does cause harmful interference to radio or television reception, which can be determined by turning the equipment off and on, the user is encouraged to try to correct the interference by one or more of the following measures:

- Reorient or relocate the receiving antenna.
- Increase the separation between the equipment and receiver.
- Connect the equipment into an outlet on a circuit different from that to which the receiver is connected.
- Consult the dealer or an experienced radio/TV technician for help.

FCC RF exposure statement:

Linkplay Con

The equipment complies with FCC radiation exposure limits set forth for an uncontrolled environment. This equipment should be installed and operated with minimum distance between 20cm the radiator your body.

IC Caution:

Radio Standards Specification RSS-Gen, issue 5

- English:

This device contains licence-exempt transmitter(s)/receiver(s) that comply with Innovation, Science and Economic Development Canada's licence-exempt RSS(s). Operation is subject to the following two conditions:

This device may not cause interference.

This device must accept any interference, including interference that may cause undesired operation of the device.

RF exposure statement:

The equipment complies with IC Radiation exposure limit set forth for uncontrolled environment. This equipment should be installed and operated with minimum distance 20cm between the radiator and your body.

- French:

Cet appareil contient des émetteurs / récepteurs exemptés de licence conformes aux RSS (RSS) d'Innovation, Sciences et Développement économique Canada. Le fonctionnement est soumis aux deux conditions suivantes:

Cet appareil ne doit pas causer d'interférences.

Cet appareil doit accepter toutes les interférences, y compris celles susceptibles de provoquer un fonctionnement indésirable de l'appareil.

Déclaration d'exposition RF:

L'équipement est conforme à la limite d'exposition aux radiations de la IC établie pour un environnement non contrôlé. Cet équipement doit être installé et utilisé avec une distance minimale de 20 cm entre le radiateur et votre corps.

When the 5G WIFI function operating in the 5150 to 5250 MHz frequency range, this device restricted to indoor use only.

OEM integration instructions:

This device is intended only for OEM integrators under the following conditions:

The transmitter module may not be co-located with any other transmitter or antenna. The module shall be only used with the external antenna(s) that has been originally tested and certified with this module.

As long as the conditions above are met, further transmitter test will not be required.

However, the OEM integrator is still responsible for testing their end-product for any additional compliance requirements required with this module installed (for example, digital device emissions, PC peripheral requirements, etc.).

Linkplay Confidential

Validity of using the module certification:
In the event that these conditions cannot be met (for example certain laptop configurations or co-location with another transmitter), then the FCC/IC authorization for this module in combination with the host equipment is no longer considered valid and the FCC ID/IC of the module cannot be used on the final product. In these circumstances, the OEM integrator will be responsible for re-evaluating the end product (including the transmitter) and obtaining a separate FCC/IC authorization.
End product labeling:
The final end product must be labeled in a visible area with the following: “Contains Transmitter Module FCC ID: 2BABF-S28. Contains IC: 30828-S28.”
Information that must be placed in the end user manual:
The OEM integrator has to be aware not to provide information to the end user regarding how to install or remove this RF module in the user's manual of the end product which integrates this module. The end user manual shall include all required regulatory information/warning as show in this manual.
Integration instructions for host product manufacturers according to KDB 996369 D03 OEM Manual v01
2.2 List of applicable FCC/IC rules
FCC Part 15 Subpart C 15.247 & 15.207 & 15.209 & 15.407& RSS GEN&RSS 247
2.3 Specific operational use conditions
The module is a Linkplay S28 with Bluetooth&2.4G WLAN&5G WIFI function.
BLE Specification：
Operation Frequency: 2402-2480MHz
Number of Channel: 40
Modulation: GFSK
Type: PCB Antenna
Gain: 1.5dBi
2.4g WIFI Specification：
Operation Frequency: 2412-2462MHz
Number of Channel: 11
Modulation: CCK,DBPSK,DQPSK,BPSK,QPSK,16QAM,64QAM
Type: PCB Antenna
Gain: 1.5dBi
5g WIFI Specification：
Operation Frequency: 5.18GHz~5.825GHz
Number of Channel: 36~48 52~64,100~140,149~165
Modulation: BPSK,QPSK,16QAM,64QAM
Type: PCB Antenna
Gain: 3.32dBi

Linkplay Confidential

The module can be used for mobile or applications with a maximum 1.5dBi antenna. The host manufacturer
installing this module into their product must ensure that the final composit product complies with the FCC/IC
requirements by a technical assessment or evaluation to the FCC/IC rules, including the transmitter operation.
The host manufacturer has to be aware not to provide information to the end user regarding how to install or
remove this RF module in the user's manual of the end product which integrates this module. The end user
manual shall include all required regulatory information/warning as show in this manual.

2.4 Limited module procedures

Not applicable. The module is a Single module and complies with the requirement of FCC Part 15.212.

2.5 Trace antenna designs

Not applicable. The module has its own antenna, and doesn't need a host' s printed board microstrip trace antenna etc.

2.6 RF exposure considerations

The module must be installed in the host equipment such that at least 20cm is maintained between the
antenna and users' body; and if RF exposure statement or module layout is changed, then the host product
manufacturer required to take responsibility of the module through a change in FCC ID/IC or new application.
The FCC ID/IC of the module cannot be used on the final product. In these circumstances, the host manufacturer will be responsible for re- evaluating the end product (including the transmitter) and obtaining a separate FCC/IC authorization

2.7 Antennas

PCB Antenna

Gain:

2.4GHZ:1.5dBi

5GHZ:3.32dBi

This device is intended only for host manufacturers under the following conditions: The transmitter module may not be co-located with any other transmitter or antenna; The module shall be only used with the internal antenna(s) that has been originally tested and certified with this module. The antenna must be either permanently attached or employ a 'unique' antenna coupler.

As long as the conditions above are met, further transmitter test will not be required. However, the host manufacturer is still responsible for testing their end-product for any additional compliance requirements required with this module installed (for example, digital device emissions, PC peripheral

Linkplay Confidential

requirements, etc.).

2.8 Label and compliance information

Host product manufacturers need to provide a physical or e-label stating

"Contains FCC ID: 2BABF-S28. Contains IC: 30828-S28."

with their finished product.

2.9 Information on test modes and additional testingrequirements

BLE:

Operation Frequency: 2402~2480MHz

Number of Channel: 40

Modulation: GFSK

2.4g wifi:

Operation Frequency: 2412-2462MHz

Number of Channel: 11

Modulation: CCK,DBPSK,DQPSK,BPSK,QPSK,16QAM,64QAM

2.4GHZ:1.5dBi

5G WIFI:

Operation Frequency:
5150MHZ~5250MHZ,5250MHZ~5325MHZ,5470MHZ~5725MHZ,5725MHZ~5825MHZ

Number of Channel: 36~48 52~64,100~140,149~165

Modulation: BPSK,QPSK,16QAM,64QAM

5GHZ:3.32dBi

Host manufacturer must perfom test of radiated & conducted emission and spurious emission, etc. according to the actual test modes for a stand-alone modular transmitter in a host, as well as for multiple simultaneously transmitting modules or other transmitters in a host product. Only when all the test results of test modes comply with FCC requirements, then the end product can be sold legally.

2.10 Additional testing, Part 15 Subpart B disclaimer

The modular transmitter is only FCC/IC authorized for FCC Part 15 Subpart C 15.247 & 15.207 & 15.209 & RSS GEN&RSS 247 and that the host product manufacturer is responsible for compliance to any other FCC/IC rules that apply to the host not covered by the modular transmitter grant of certification. If the grantee markets their product as being Part 15 Subpart B/RSS GEN compliant (when it also contains unintentional-radiator digital circuity), then the grantee shall provide a notice stating that the final host product still requires Part 15 Subpart B/ RSS GEN compliance testing with the modular transmitter installed.

11 Revision History

Revision	Date	Originator	Comments

Linkplay Confidential

V1.2	**05/12/2023**	**Yahui Zhou**	
V1.3	**11/21/2023**	**Yahui Zhou**	Add Marking Description
V1.4	**01/22/2024**	**Yahui Zhou**	Update Bluetooth Version
V1.5	**4/10/2024**	**Shengwei Yang**	Add FCC Warning
V1.6	**5/8/2024**	**Shengwei Yang**	Add IC Caution

Linkplay Confidential