Prüfbericht - Produkte
Test Report - Products

TÜVRheinland®

Prüfbericht-Nr.: *Test report no.:*	**CN23Q5RT 002**	**Auftrags-Nr.:** *Order no.:*	**168413053**	Seite 1 von 20 *Page 1 of 20*
Kunden-Referenz-Nr.: *Client reference no.:*	**N/A**	**Auftragsdatum:** *Order date:*	2023-02-07	
Auftraggeber: *Client:*	**SKYWORTH OPTICAL-ELECTRONIC CO., LTD.** 3rd Floor-4th Floor, Mould Factory, Skyworth Technology Park, Tangtou Community, Shiyan Street, Baoan District, Shenzhen, Guangdong Province,China.			
Prüfgegenstand: *Test item:*	WIFI+BT Module IEEE 802.11 a/b/g/n/ac/ax 2T/2R			
Bezeichnung / Typ-Nr.: *Identification / Type no.:*	WXT2IM2511			
Auftrags-Inhalt: *Order content:*	Test Report			
Prüfgrundlage: *Test specification:*	CFR47 FCC Part 15: Subpart C Section 15.247 CFR47 FCC Part 15: Subpart C Section 15.207 CFR47 FCC Part 15: Subpart C Section 15.209	RSS-247 Issue 2 February 2017 RSS-Gen Issue 5 February 2021		
Wareneingangsdatum: *Date of sample receipt:*	2023-01-04	Refer to photo documentation		
Prüfmuster-Nr.: *Test sample no:*	T230104007-Y01/01			
Prüfzeitraum: *Testing period:*	2023-01-04 to 2023-03-13			
Ort der Prüfung: *Place of testing:*	Shenzhen Central Standard International Center Co., Ltd.			
Prüflaboratorium: *Testing laboratory:*	TÜV Rheinland (Shenzhen) Co., Ltd.			
Prüfergebnis*: *Test result*:*	Pass			

geprüft von: *tested by:* X Hardy Suo

Datum: *Date:* 2023-04-14

Stellung / *Position:* Engineer

genehmigt von: *authorized by:* X Lin Lin

Ausstellungsdatum: *Issue date:* 2023-04-14

Stellung / *Position:* Reviewer

Sonstiges / *Other:*

FCC ID: 2BAD6-7METZIFPD
IC: 30102-7METZIFPD
HVIN: WXT2IM2511

Zustand des Prüfgegenstandes bei Anlieferung: *Condition of the test item at delivery:* Prüfmuster vollständig und unbeschädigt *Test item complete and undamaged*

* Legende:	1 = sehr gut	2 = gut	3 = befriedigend	4 = ausreichend	5 = mangelhaft
	P(ass) = entspricht o.g. Prüfgrundlage(n)		F(ail) = entspricht nicht o.g. Prüfgrundlage(n)	N/A = nicht anwendbar	N/T = nicht getestet
** Legend:*	*1 = very good*	*2 = good*	*3 = satisfactory*	*4 = sufficient*	*5 = poor*
	P(ass) = passed a.m. test		*F(ail) = failed a.m. test specification(s)*	*N/A = not applicable*	*N/T = not tested*

Dieser Prüfbericht bezieht sich nur auf das o.g. Prüfmuster und darf ohne Genehmigung der Prüfstelle nicht auszugsweise vervielfältigt werden. Dieser Bericht berechtigt nicht zur Verwendung eines Prüfzeichens.
This test report only relates to the a. m. test sample. Without permission of the test center this test report is not permitted to be reproduced in extracts. This test report does not entitle to carry any test mark.

Test Summary

5.1.1 ANTENNA REQUIREMENT
RESULT: Pass

5.1.2 MAXIMUM PEAK CONDUCTED OUTPUT POWER
RESULT: Pass

5.1.3 CONDUCTED POWER SPECTRAL DENSITY
RESULT: Pass

5.1.4 6DB BANDWIDTH
RESULT: Pass

5.1.5 99% BANDWIDTH
RESULT: Pass

5.1.6 CONDUCTED SPURIOUS EMISSIONS MEASURED IN 100 KHZ BANDWIDTH
RESULT: Pass

5.1.7 RADIATED SPURIOUS EMISSION
RESULT: Pass

5.1.8 CONDUCTED EMISSION ON AC MAINS
RESULT: Pass

Contents

1 GENERAL REMARKS 4
1.1 COMPLEMENTARY MATERIALS 4
2 TEST SITES 4
2.1 TEST FACILITIES 4
2.2 LIST OF TEST AND MEASUREMENT INSTRUMENTS 4
2.3 TRACEABILITY 5
2.4 CALIBRATION 5
2.5 MEASUREMENT UNCERTAINTY 5
2.6 LOCATION OF ORIGINAL DATA 6
2.7 STATUS OF FACILITY USED FOR TESTING 6
3 GENERAL PRODUCT INFORMATION 7
3.1 PRODUCT FUNCTION AND INTENDED USE 7
3.2 RATINGS AND SYSTEM DETAILS 7
3.3 INDEPENDENT OPERATION MODES 8
3.4 NOISE GENERATING AND NOISE SUPPRESSING PARTS 8
3.5 SUBMITTED DOCUMENTS 8
4 TEST SET-UP AND OPERATION MODES 9
4.1 PRINCIPLE OF CONFIGURATION SELECTION 9
4.2 TEST OPERATION AND TEST SOFTWARE 9
4.3 SPECIAL ACCESSORIES AND AUXILIARY EQUIPMENT 9
4.4 COUNTERMEASURES TO ACHIEVE EMC COMPLIANCE 9
4.5 TEST SETUP DIAGRAM 10
5 TEST RESULTS 12
5.1 TRANSMITTER REQUIREMENT & TEST SUITES 12
5.1.1 Antenna Requirement 12
5.1.2 Maximum Peak Conducted Output Power 13
5.1.3 Conducted Power Spectral Density 14
5.1.4 6dB Bandwidth 15
5.1.5 99% Bandwidth 16
5.1.6 Conducted Spurious Emissions Measured in 100 kHz Bandwidth 17
5.1.7 Radiated Spurious Emission 18
5.1.8 Conducted Emission on AC Mains 19
6 PHOTOGRAPHS OF THE TEST SET-UP 20
7 LIST OF TABLES 20

1 General Remarks

1.1 Complementary Materials

All attachments are integral parts of this test report. This applies especially to the following appendix:

Appendix A: Photographs of the Test Set-up

Appendix B: Test Results of Bluetooth

2 Test Sites

2.1 Test Facilities

Shenzhen Central Standard International Center Co., Ltd.
Room 201, Building 1, Mogen Fashion Industrial Park, No. 10, Shilongzai Road, Xinshi Community, Dalang Street, Longhua District, Shenzhen.
CNAS No.: L11671
A2LA No.: 6426.01
FCC Registration No.: 0031378433
IC CAB identifier No.: CN0051

The tests at the test sites have been conducted under the supervision of a TÜV engineer.

2.2 List of Test and Measurement Instruments

Table 1: List of Test and Measurement Equipment

Radio Spectrum Testing				
Equipment	**Manufacturer**	**Model**	**Serial No.**	**Cal. until**
Spectrum Analyzer	Agilent	N9020A	MY50200391	Jun. 13, 2023
Power sensor	KEYSIGHT	U2021XA	MY55080015	Jun. 13, 2023
Power sensor	KEYSIGHT	U2021XA	MY54250016	Jun. 13, 2023
Power sensor	KEYSIGHT	U2021XA	MY54250020	Jun. 13, 2023
Power sensor	KEYSIGHT	U2021XA	MY54210030	Jun. 13, 2023
Vector Signal Generator	Agilent	N5182A	MY50140130	Jun. 13, 2023
Signal generator	Agilent	SML03	100925	Jun. 13, 2023
Power sensor Box	MWRFtest	N/A	N/A	N/A
RF Switch Box	MWRFtest	MW100-RFCB	N/A	N/A
MTS 8310	MWRFtest	V 2.0.0.0		
Unwanted Emission Testing				
Equipment	**Manufacturer**	**Model**	**Serial No.**	**Cal. until**
Spectrum Analyzer	Agilent	N9020A	MY50200391	Jun. 13, 2023

Bilog Antenna	Schwarzbeck	VULB9168	VULB9168-250	Jul. 25, 2025
Horn Antenna	AARONIAAG	Powerlog 70180	3980	Jul. 04, 2025
Horn Antenna	A-INFOMW	LB-180400-KF	J211020657	Sep. 26, 2023
Loop Antenna	Schwarzbeck	FMZB1519B	00023	Nov. 15, 2023
Amplifier	HP	8447F	2634A02050	Jun. 13, 2023
Amplifier	Agilent	8449B	4035A00116	Jun. 13, 2023
3M Chamber	Maor	9*6*6	--	Jul. 26, 2023
Equipment	**Manufacturer**	**Model No.**	**Serial No.**	**Cal. Until**
EMI Test Receiver	R&S	ESRP3	101936	Jun. 13, 2023
LISN	R&S	ENV216	100002	Jun. 13, 2023
Shelding Room	Maor	8*4*3	--	May. 03, 2023
EZ-EMC	Fara	V 3.1		

2.3 Traceability

All measurement equipment calibrations are traceable to NIM (National Institute of Metrology) or where calibration is performed in other countries, to equivalent nationally recognized standards organizations.

2.4 Calibration

Equipment requiring calibration is calibrated periodically by the manufacturer or according to manufacturer's specifications. Additionally all equipment is verified for proper performance on a regular basics using in house standards or comparisons.

2.5 Measurement Uncertainty

The estimated combined standard uncertainty for radiated emissions and conducted emissions measurements as below table.

Table 2: Measurement Uncertainty

Parameter	Uncertainty
Radio Frequency	±2.7 x 10^{-5}
RF Power (conducted)	±0.66 dB
Radiated Emission of Transmitter, valid up to 26.5 GHz	±5.08 dB
Radiated Emission of Receiver, valid up to 26.5 GHz	±5.08 dB
Conducted Emission, (150kHz to 30MHz)	± 3.26 dB
Radiated Emission (3m SAC), 30MHz to 1000MHz	± 4.58 dB
Radiated Emission (3m SAC), above 1000MHz	± 5.10 dB
Temperature	±2 °C
Humidity	±5 %
Voltage (DC)	±5 %
Voltage (AC, <10kHz)	±5 %

2.6 Location of Original Data

The original copies of all test data taken during actual testing were showed in this report and delivered to the applicant. A copy has been retained in the TÜV Rheinland (Shenzhen) Co., Ltd. file for certification follow-up purposes.

2.7 Status of Facility Used for Testing

Shenzhen Central Standard International Center Co., Ltd.

Room 201, Building 1, Mogen Fashion Industrial Park, No. 10, Shilongzai Road, Xinshi Community, Dalang Street, Longhua District, Shenzhen

3 General Product Information

3.1 Product Function and Intended Use

The EUT is a RF Module which supports Bluetooth, 2.4G Wi-Fi 802.11 b/g/n/ax, 5G Wi-Fi 802.11a/n/ac/ax wireless technology.

For details refer to the User Manual, Technical Description and Circuit Diagram.

Note: This report is for Bluetooth Low Energy mode only.

3.2 Ratings and System Details

Table 3: Technical Specification of EUT

General Information of EUT	Value
Kind of Equipment:	WIFI+BT Module IEEE 802.11 a/b/g/n/ac/ax 2T/2R
Type Designation:	WXT2IM2511
FCC ID:	2BAD6-7METZIFPD
IC	30102-7METZIFPD
HVIN	WXT2IM2511
Operating Voltage:	DC 5V
Technical Specification of Bluetooth LE	
Frequency Range:	2402 MHz to 2480 MHz
Type of Modulation:	GFSK
Channel Number:	40 channels
Data Rate:	1 Mbps
Channel Separation:	2 MHz
Antenna Type:	PIFA Antenna
Antenna Gain:	1.85 dBi

Table 4: RF Channel and Frequency of Bluetooth Low Energy

RF Channel	Frequency (MHz)	RF Channel	Frequency (MHz)	RF Channel	Frequency (MHz)	RF Channel	Frequency (MHz)
0	**2402.00**	10	2422.00	20	2442.00	30	2462.00
1	2404.00	11	2424.00	21	2444.00	31	2464.00
2	2406.00	12	2426.00	22	2446.00	32	2466.00
3	2408.00	13	2428.00	23	2448.00	33	2468.00
4	2410.00	14	2430.00	24	2450.00	34	2470.00
5	2412.00	15	2432.00	25	2452.00	35	2472.00
6	2414.00	16	2434.00	26	2454.00	36	2474.00
7	2416.00	17	2436.00	27	2456.00	37	2476.00
8	2418.00	18	2438.00	28	2458.00	38	2478.00
9	2420.00	**19**	**2440.00**	29	2460.00	**39**	**2480.00**

3.3 Independent Operation Modes

The basic operation modes are:

A. On, Bluetooth LE transmitting mode
   1) Low Channel
   2) Middle Channel
   3) High Channel

B. On, Normal operation with Bluetooth mode

C. Off

3.4 Noise Generating and Noise Suppressing Parts

Refer to Circuit Diagram for further details.

3.5 Submitted Documents

- Application Form
- Block Diagram
- Schematics
- Technical Description
- FCC/IC Label and Location Info
- Photo Document
- User Manual

4 Test Set-up and Operation Modes

4.1 Principle of Configuration Selection

Radio Spectrum: The equipment under test (EUT) was configured at its highest power output in order to measure its highest possible radiation and conducted level. The test modes were adapted accordingly in reference to the instructions for use.

Emission: The equipment under test (EUT) was configured to measure its highest possible radiation level. The test modes were adapted accordingly in reference to the instructions for use.

4.2 Test Operation and Test Software

Test operation refers to test setup in chapter 5. All tests were performed according to the procedures in ANSI C63.10: 2013.

4.3 Special Accessories and Auxiliary Equipment

Table 5: Auxiliary Equipment Used during Test

Description	Manufacturer	Model	S/N	Rating
Notebook	DELL	Vostro 3400	N/A	N/A

4.4 Countermeasures to Achieve EMC Compliance

The test sample which has been tested contained the noise suppression parts as described in the Technical Construction File (TCF).

No additional measures were employed to achieve compliance.

4.5 Test Setup Diagram

Diagram of Measurement Configuration for Radiation Test (Below 30MHz)

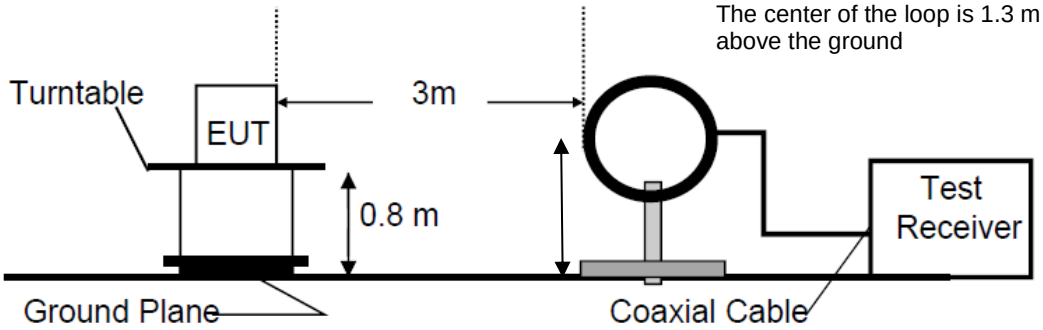

Diagram of Measurement Configuration for Radiation Test (Below 1GHz)

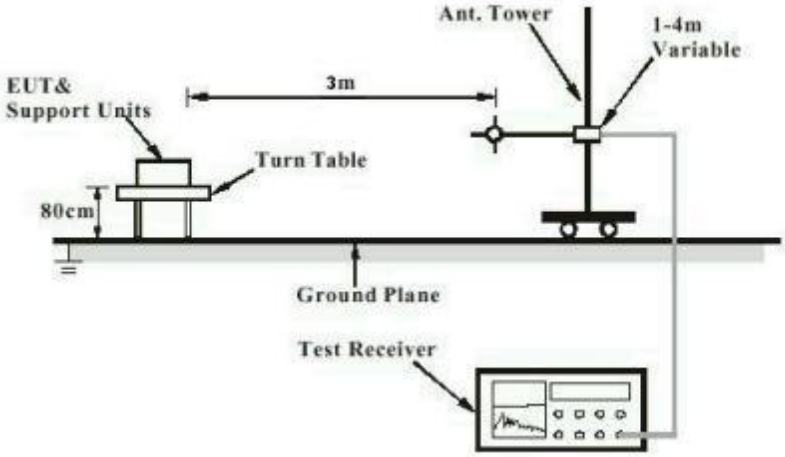

Diagram of Measurement Configuration for Radiation Test (Above 1GHz)

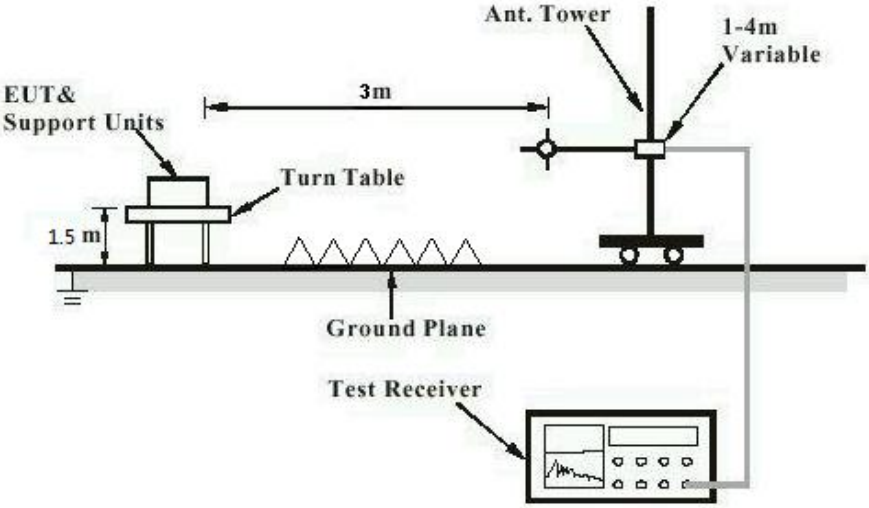

Diagram of Measurement Configuration for Mains Conduction Measurement

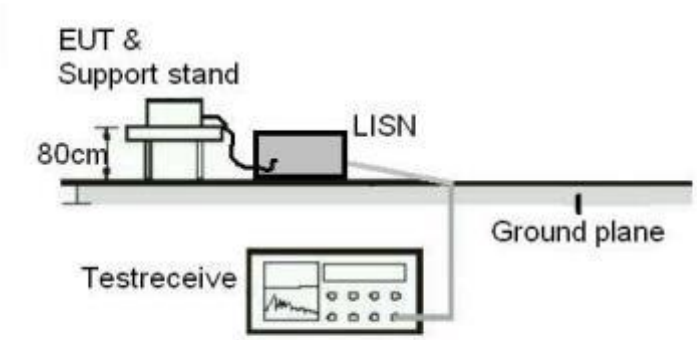

Diagram of Measurement Configuration for Conducted Transmitter Measurement

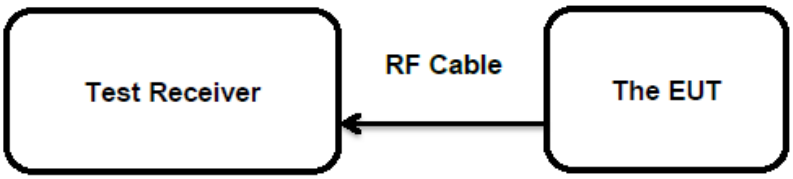

5 Test Results

5.1 Transmitter Requirement & Test Suites

5.1.1 Antenna Requirement

RESULT: **Pass**

Test Specification

Test standard	:	FCC Part 15.247(b)(4) and Part 15.203 RSS-Gen Clause 6.7

According to the manufacturer declared, the EUT has a PIFA Antenna, the gain of antenna is 1.85 dBi, which that use of a non-standard antenna connector and no consideration of replacement.

Therefore, the EUT is considered sufficient to comply with the provision.

Refer to EUT Photo for further details.

5.1.2 Maximum Peak Conducted Output Power

RESULT: **Pass**

Test Specification

Test standard	:	FCC Part 15.247(b)(3) RSS-247 Clause 5.4(d)
Basic standard	:	ANSI C63.10: 2013
Limits	:	1.0 Watts e.i.r.p. < 4W
Kind of test site	:	Shielded Room

Test Setup

Date of testing	:	2023-01-04 – 2023-03-13
Input voltage	:	DC 5V
Operation mode	:	A
Test channel	:	Low / Middle / High
Ambient temperature	:	26.8 ℃
Relative humidity	:	40 %
Atmospheric pressure	:	101 kPa

Table 6: Test Result of Maximum Conducted Output Power, BLE

Test Mode	Test Channel (MHz)	Measured Average Power		Limit (W)
		(dBm)	(W)	
BLE_1Mbps	2402	4.775	0.0030	< 1.0
	2440	5.916	0.0039	
	2480	6.015	0.0040	
Max. Measured Value		**6.015**	**0.0040**	

Note:
1) The cable loss is taken into account in results.
2) Antenna gain(G): 1.85 dBi

5.1.3 Conducted Power Spectral Density

RESULT: **Pass**

Test Specification

Test standard	:	FCC Part 15.247(e) RSS-247 Clause 5.2(b)
Basic standard	:	ANSI C63.10: 2013
Limits	:	< 8 dBm / 3kHz
Kind of test site	:	Shielded Room

Test Setup

Date of testing	:	2023-01-04 – 2023-03-13
Input voltage	:	DC 5V
Operation mode	:	A
Test channel	:	Low / Middle / High
Ambient temperature	:	26.8 ℃
Relative humidity	:	40 %
Atmospheric pressure	:	101 kPa

For the measurement records, refer to the appendix B.

5.1.4 6dB Bandwidth

RESULT: **Pass**

Test Specification

Test standard	:	FCC Part 15.247(a)(2) RSS-247 Clause 5.2(a)
Basic standard	:	ANSI C63.10: 2013
Limits	:	> 500 KHz
Kind of test site	:	Shielded Room

Test Setup

Date of testing	:	2023-01-04 – 2023-03-13
Input voltage	:	DC 5V
Operation mode	:	A
Test channel	:	Low / Middle / High
Ambient temperature	:	26.8 ℃
Relative humidity	:	40 %
Atmospheric pressure	:	101 kPa

For the measurement records, refer to the appendix B.

5.1.5 99% Bandwidth

RESULT: **Pass**

Test Specification

Test standard	:	FCC Part 15.247(a) RSS-Gen clause 6.7
Basic standard	:	ANSI C63.10: 2013
Kind of test site	:	Shielded Room

Test Setup

Date of testing	:	2023-01-04 – 2023-03-13
Input voltage	:	DC 5V
Operation mode	:	A
Test channel	:	Low / Middle / High
Ambient temperature	:	26.8 ℃
Relative humidity	:	40 %
Atmospheric pressure	:	101 kPa

For the measurement records, refer to the appendix B.

5.1.6 Conducted Spurious Emissions Measured in 100 kHz Bandwidth

RESULT: **Pass**

Test Specification

Test standard	:	FCC Part 15.247(d) RSS-247 Clause 5.5
Basic standard	:	ANSI C63.10: 2013
Limits	:	20dB (below that in the 100kHz bandwidth within the band that contains the highest level of the desired power); In addition, radiated emissions which fall in the restricted bands, must also comply with the radiated emission limits specified in 15.209(a)
Kind of test site	:	Shielded Room

Test Setup

Date of testing	:	2023-01-04 – 2023-03-13
Input voltage	:	DC 5V
Operation mode	:	A
Test channel	:	Low / Middle / High
Ambient temperature	:	26.8 ℃
Relative humidity	:	40 %
Atmospheric pressure	:	101 kPa

Test results of 100kHz Bandwidth of Frequency Band Edge by Conducted method refer to test plots, and compliance is achieved as well.

For the measurement records, refer to the appendix B.

5.1.7 Radiated Spurious Emission

RESULT: **Pass**

Test Specification

Test standard	:	FCC Part 15.247(d) & FCC Part 15.205 RSS-247 Clause 3.3 & 5.5
Basic standard	:	ANSI C63.10: 2013
Limits	:	Refer to 15.209(a) of FCC part 15.247(d) RSS-Gen Table 4 & Table 5
Kind of test site	:	3m Semi-anechoic Chamber

Test Setup

Date of testing	:	2023-01-04 – 2023-03-13
Input voltage	:	DC 5V
Operation mode	:	A
Test channel	:	Low / Middle / High
Ambient temperature	:	25.2 ℃
Relative humidity	:	47 %
Atmospheric pressure	:	101 kPa

For the measurement records, refer to the appendix B.

Remark:

1) This testing was carried out on different modulations, but only the worst case was presented in this report.
2) Testing was carried out within frequency range 9kHz to the tenth harmonics. The measurement results below 30MHz and 18GHz - 26.5GHz were greater than 20dB below the limit, so only the radiated spurious emissions from 30MHz to 18GHz were reported.

5.1.8 Conducted Emission on AC Mains

RESULT: **Pass**

Test Specification

Test standard	:	FCC Part 15.207(a) RSS-Gen Clause 8.8
Basic standard	:	ANSI C63.10: 2013
Frequency range	:	0.15 – 30MHz
Limits	:	FCC Part 15.207(a) RSS-Gen Table 4
Kind of test site	:	Shielded Room

Test Setup

Date of testing	:	2023-01-04 – 2023-03-13
Input voltage	:	AC 120V/60Hz
Operation mode	:	B
Earthing	:	Not connected
Ambient temperature	:	26.8 ℃
Relative humidity	:	400 %
Atmospheric pressure	:	101 kPa

For the measurement records, refer to the appendix B.

6 Photographs of the Test Set-Up

For photographs of the test set-up, refer to the appendix A.

7 List of Tables

Table 1: List of Test and Measurement Equipment 4
Table 2: Measurement Uncertainty 5
Table 3: Technical Specification of EUT 7
Table 4: RF Channel and Frequency of Bluetooth Low Energy 8
Table 5: Auxiliary Equipment Used during Test 9
Table 6: Test Result of Maximum Conducted Output Power, BLE 13