此页不印刷，从后页文件开始

山西嘉世达机器人技术有限公司
2024/08/27
受控文件

零件代号

借(通)用件登记

旧底图总号

底图总号

签名

日期

技术要求

1. 成品尺寸：210*140mm 骑马钉
2. 材质：128g双面铜版纸
3. 印刷质量：上下左右偏差<3mm、印刷清晰、无漏白，刀口质量：面刀卡破损<3mm、切口偏差<3mm、无毛边。
4. 印刷内容:图案文字正确、印刷颜色正确、位置排列正确。
5. 表面平整，无气泡脱裱，无褶皱，无破损，无污渍，其体参照JSD外观要求。
6. 未注尺寸公差按照GB/T 1804-c。
7. 此部品所含铅（Pb）、汞（Hg）、镉（Cd）、六价铬（Cr6+）、多溴联苯（PBB）、多溴二苯醚（PBDE）符合RoHS限值要求，其他细则请参考RoHS指令2011/65/EU附录II。

版本	位置	变更说明	签名	日期
V02		去除LOGO、增加警示语	陈凯丽	2024.08.21

设计	陈凯丽	2024.08.21
审核	赵婧	2024.08.21
批准	蒲勇、王玉宏	2024.08.21

材料名称	铜版纸			公司名称	山西嘉世达机器人技术有限公司
产品名称	说明书			产品料号	30060100080201
视图		质量(g)	比例		
			1.000	版本	V02
第 1 张		共 1 张			

幅面

USER MANUAL

ULTRASONIC WATER SPRAY
WINDOW CLEANING ROBOT

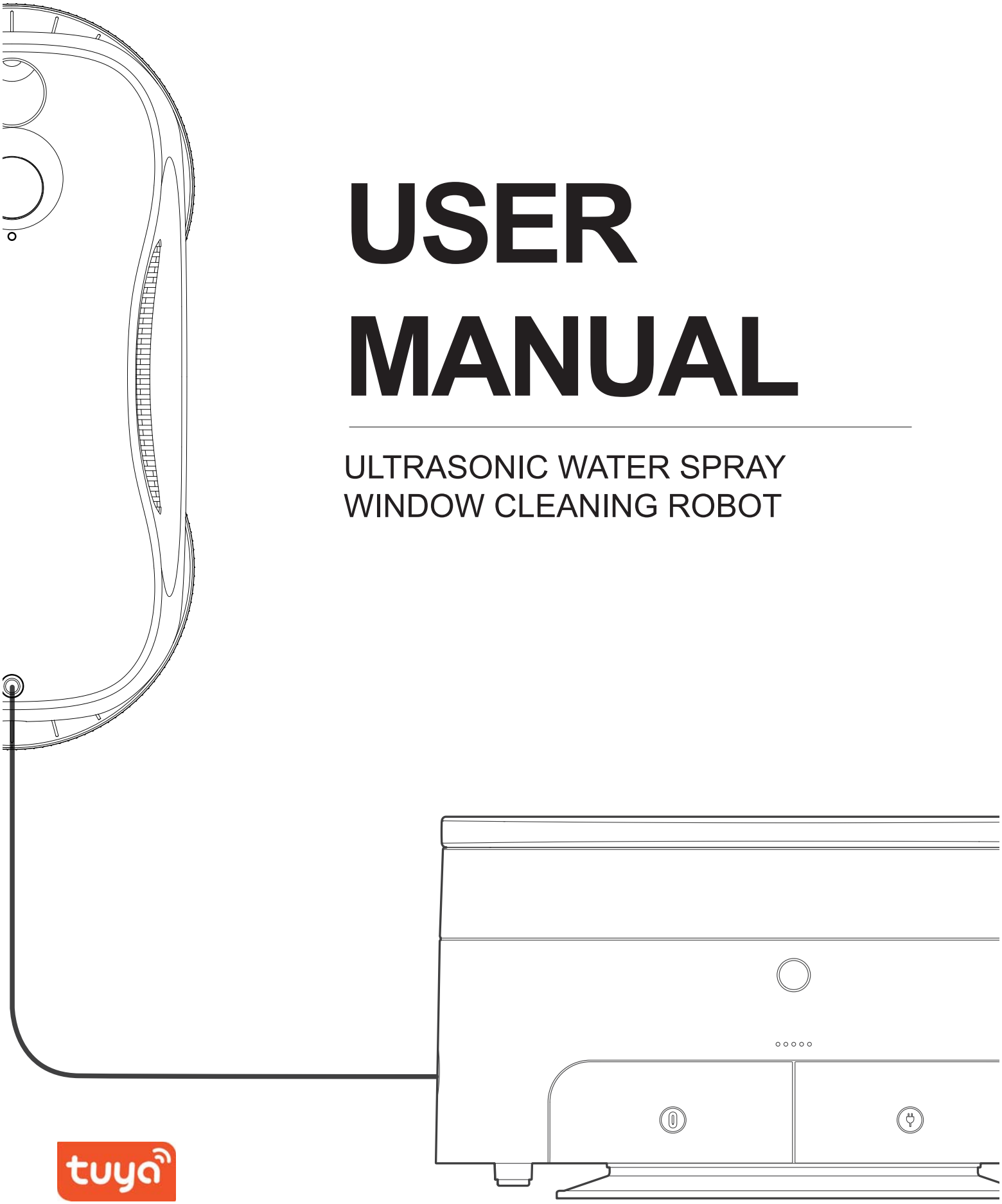

BLUETOOTH CONNECTION (OPTIONAL APP CONTROL)

1.Bluetooth Reset

(1) Turn off the robot, disconnect the DC power supply, and plug in the DC power supply again.

(2) Press and hold the power/start button for more than 8 seconds.

(3) When the reset is successful, the fan will stop rotating and then the buzzer will beep for 2 seconds

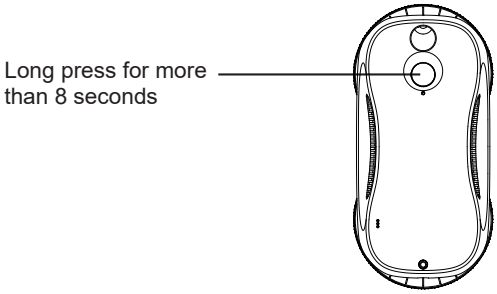

2.Turn on the Phone Network and Bluetooth

3.Download Tuya Smart App Register and Login

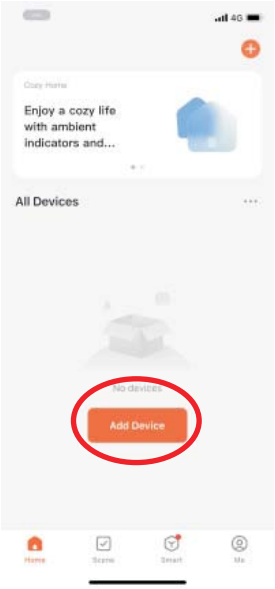

4.Adding Devices

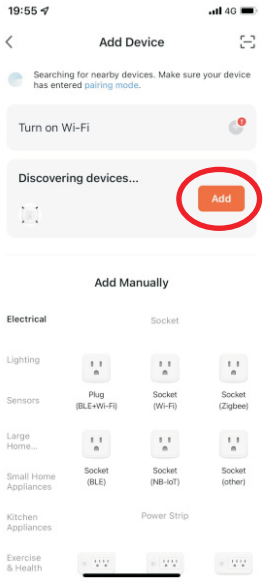

5.Press“+”

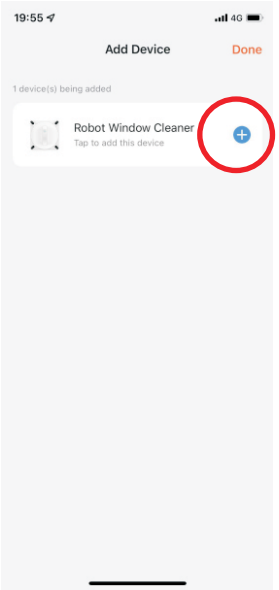

6.Press“Done”

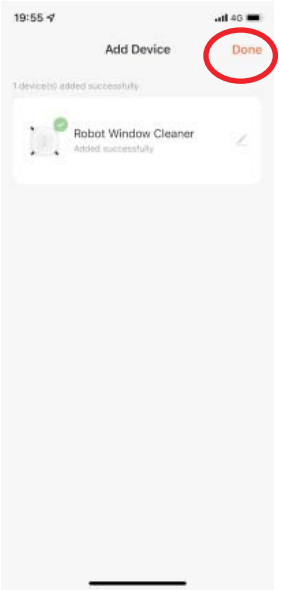

7.User Interface

Thank you for choosing Ultrasonic Water Spray Window Cleaning Robot

Please read this manual in detail before use to ensure your personal safety and the effective working of the product.

- ☐ 简体中文 (sc)
- ☐ 繁體中文 (tc)
- ■ English (en)
- ☐ 日本語 (jp)
- ☐ 한국어 (kr)
- ☐ български (bg)
- ☐ español (es)
- ☐ čeština (cs)
- ☐ dansk (da)
- ☐ Deutsch (de)
- ☐ eesti (et)
- ☐ ελληνικά (el)
- ☐ français (fr)
- ☐ Gaeilge (ga)
- ☐ hrvatski (hr)
- ☐ italiano (it)
- ☐ lietuvių (lt)
- ☐ latviešu (lv)
- ☐ magyar (hu)
- ☐ Malti (mt)
- ☐ Nederlands (nl)
- ☐ polski (pl)
- ☐ português (pt)
- ☐ română (ro)
- ☐ slovenčina (sk)
- ☐ slovenščina (sl)
- ☐ suomi (fi)
- ☐ svenska (sv)

INDEX

ENGLISH

Important safeguards	2
Parts list	3
Content of the box	5
Installation intructions	6
Instruction and cautions	11
Path planning	12
Spot cleaning route	13
Meanings of led indicator lamp and voice	13
Remote control	14
Parameters	15
Water tank maintenance	15
Troubleshooting	16
Safety	17
Warranty	18
Fault list	18
Customer information	19
Maintenance records	19

ENGLISH

Thank you for choosing our windows cleaner. Before using the appliance, and to ensure the best use, carefully read these instructions.

The safety precautions enclosed herein reduce the risk of death, injury and electrical shock when correctly adhered to. Keep the manual in a safe place for future reference, along with the completed warranty card, purchase receipt and package. If applicable, pass these instructions on to the next owner of the appliance. Always follow basic safety precautions and accident prevention measures when using an electrical appliance. We assume no liability for customer failing to comply with these requirements.

IMPORTANT SAFEGUARDS

When using any electrical appliance, basic safety precautions should always be observed.

- Carefully inspect the safety cable, ensure there's no damage on it and that it is toughly buckled to an object.
- When the product is working high above the ground, reserve warning marks on the ground.
- Don't spray water into this product and don't use this product on glass with cracks.
- When you are cleaning the external surface of this product, turn it off. Avoid the personal injuries caused by the running product.
- Don't touch the rotating parts or openings of this product with your hand or any other part of your body.
- When you are operating this product, please follow the instructions in this manual. If you can't solve the troubles, contact the customer service directly. Don't repair this product without authorization, it may result in personal injury.
- It can only be used in the home environment.
- Don't use a charger from a third party, or remove the frame, battery and charger without authorization.
- When a damage or crack occurs to this product, don't use it anymore and contact the customer service.
- Keep the charger far away from heating sources.
- If you want to transport this product, we recommend to use the original package and turn off the product.
- In case this product is not going to be used in a long period of time, fully charge it and turn it off. Store this product in a cool and dry place. This product shall be charged at least every three months to prevent the battery from being out of service caused by storing in for a too long period of time.

PARTS LIST

Front of base station

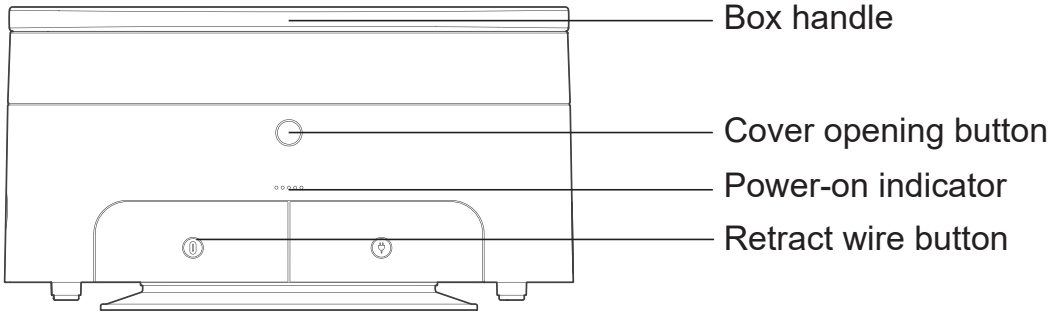

Back of base station

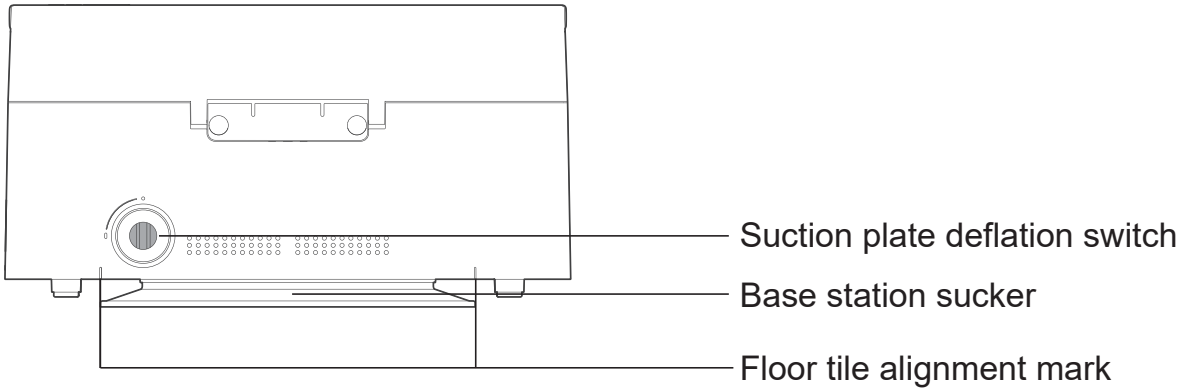

Side of base station

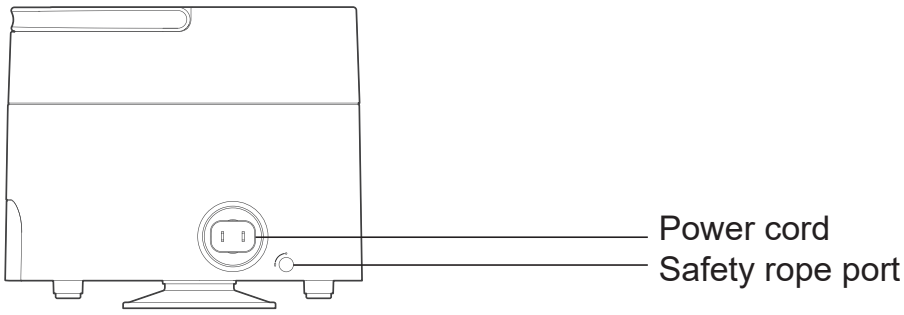

PARTS LIST

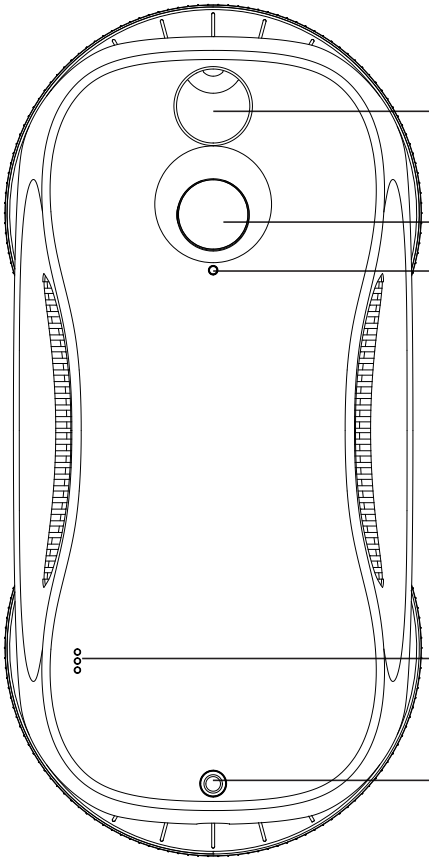

Sideview

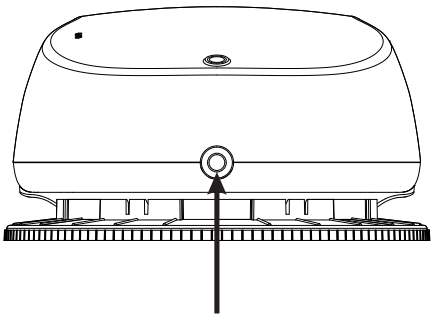

Cord installed Port

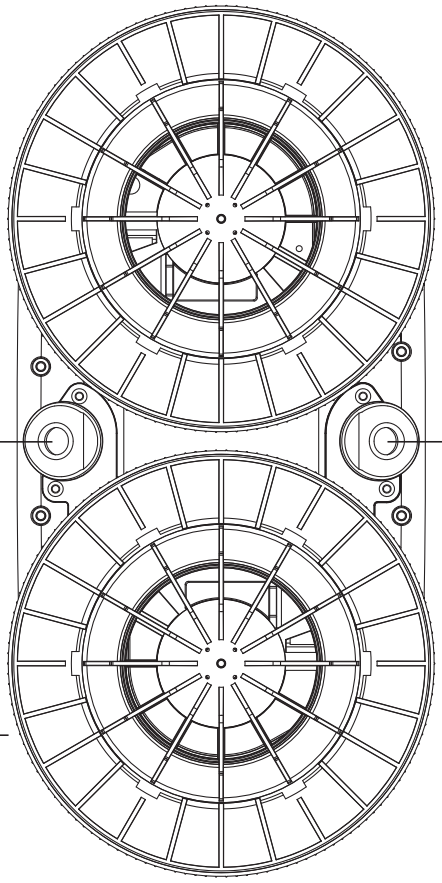

Nozzle

Nozzle

Mop Holder
(normally not disassembled, Direct load wipes)

CONTENT OF THE BOX

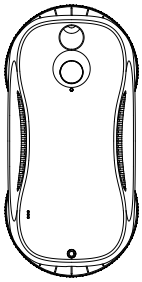

Window Cleaning Robot x1

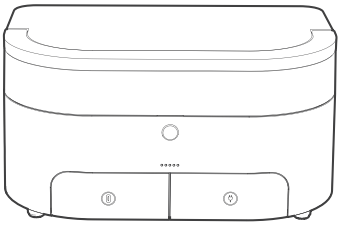

Base station x1

Remote Control x1

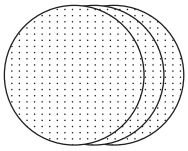

Mops x10 PCS

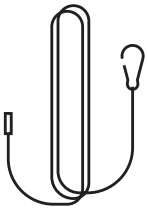

Safety Cable x1

Water Bottle x1

Nozzle x1

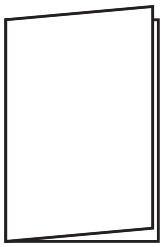

User Manual x1

INSTALLATION INTRUCTIONS

Adsorption base station

Put the base station on the surface of the fixed object with a clean and smooth surface (avoiding crevices),and turn the knob at the rear of the base station clockwise to the "O" to adsorb.

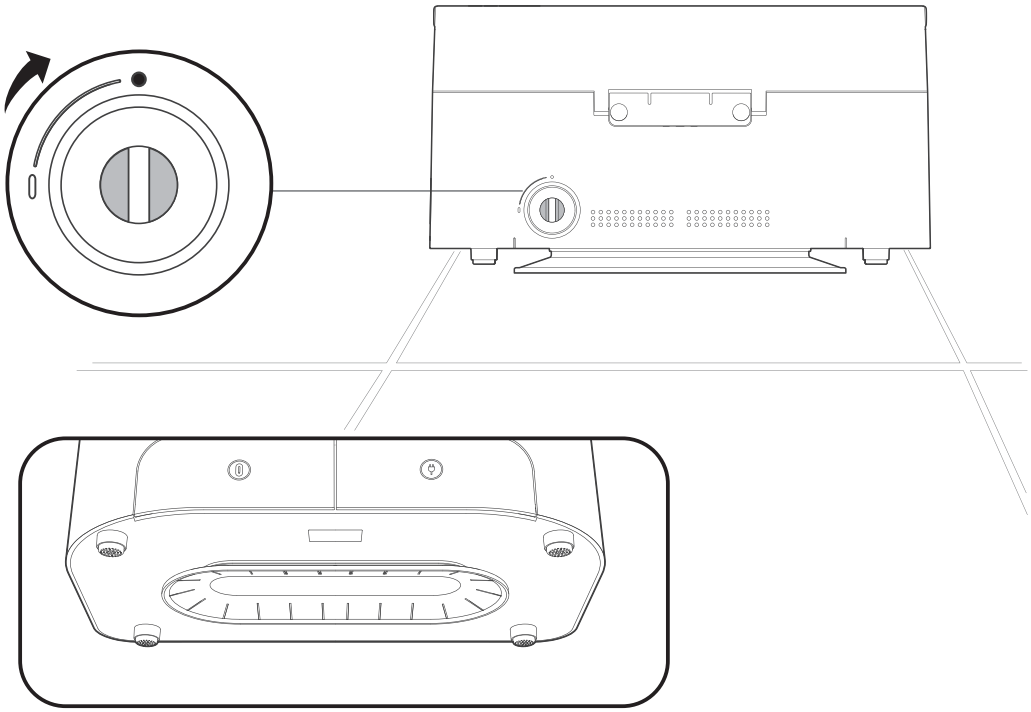

Insert the safety rope buckle horizontally into the hole on the side of the base station, and rotate 90 ° clockwise to lock, fasten the safety rope and tie it to an indoor fixture before operating the device.

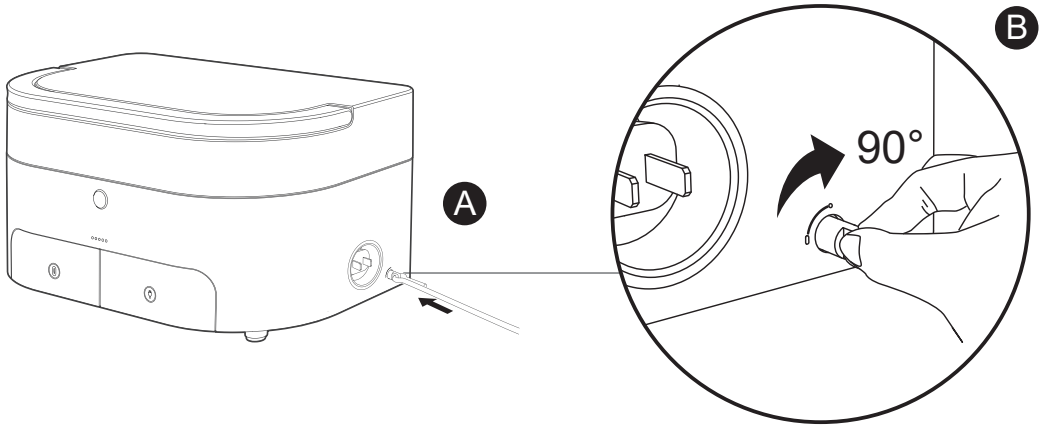

INSTALLATION INTRUCTIONS

Ⓒ

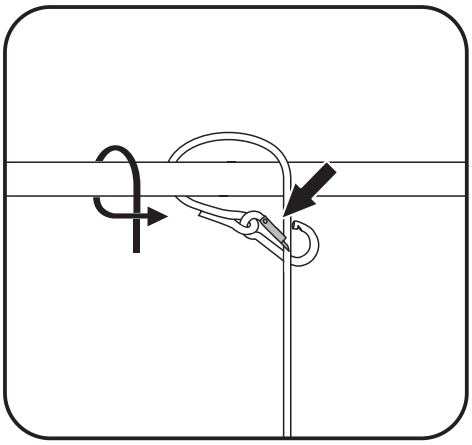

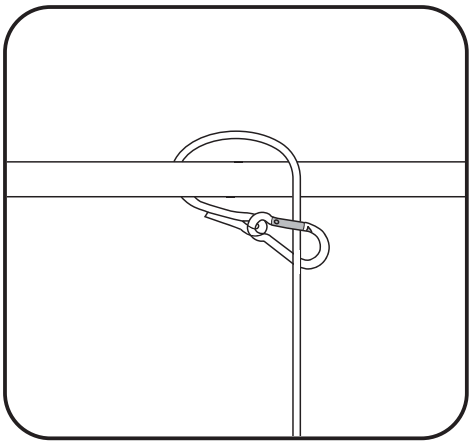

*It is recommended to fix the safety rope buckle on the protective railing.

Connect the power

Pull out the plug from the base station and insert it into the socket. The blue indicator is always on to indicate that the power is on.

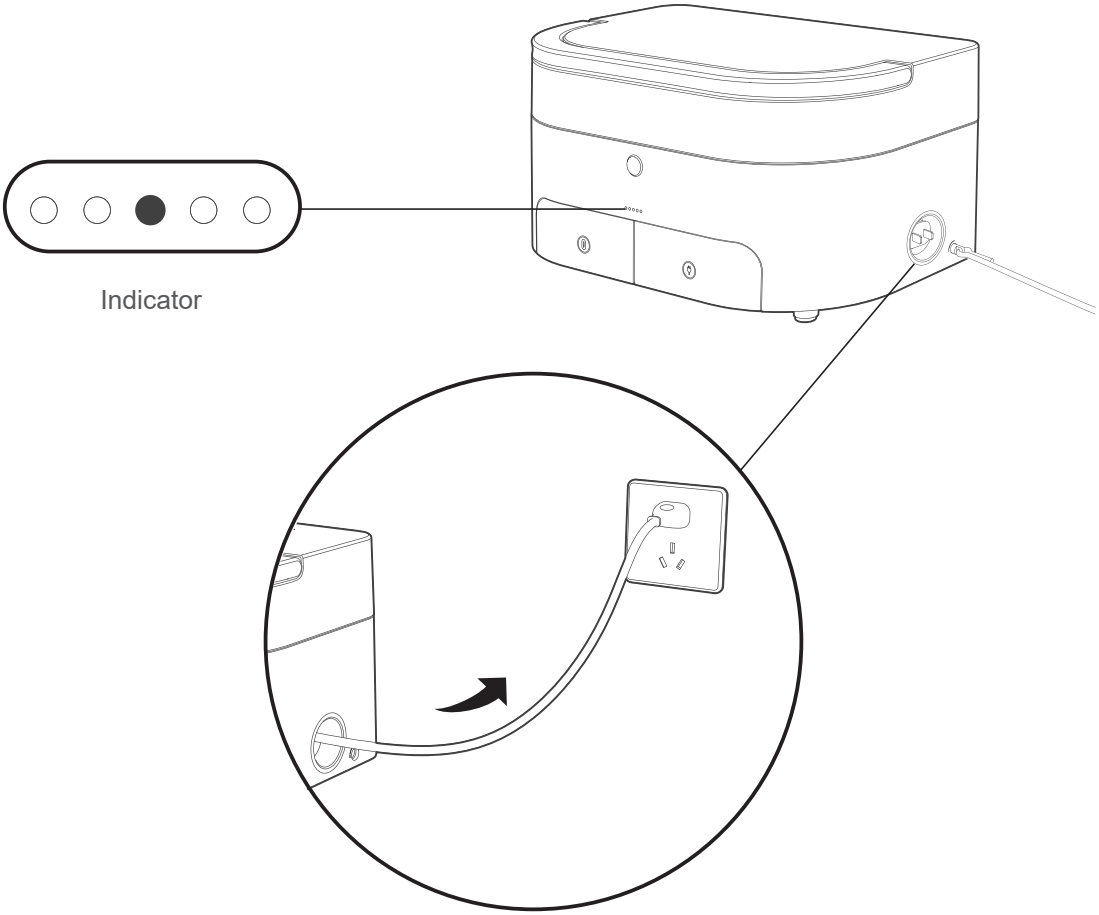

INSTALLATION INTRUCTIONS

Pull out the wire

Pull power cord out to the appropriate length.

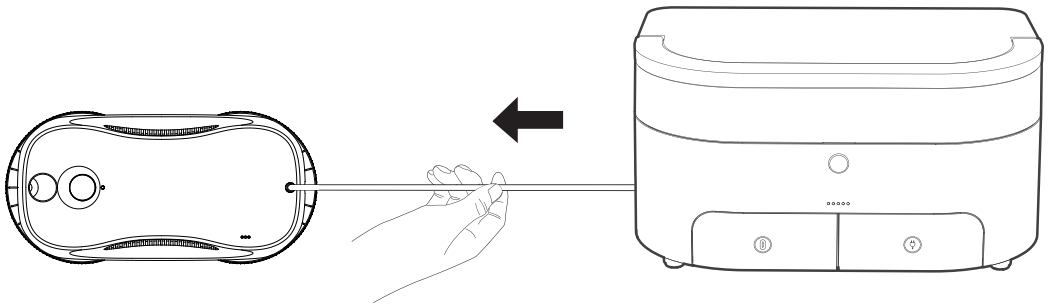

Connected successfully

When the device is working, do not disconnect the power. If the power is off during operation, the device must be retracted in time to prevent the device from falling.

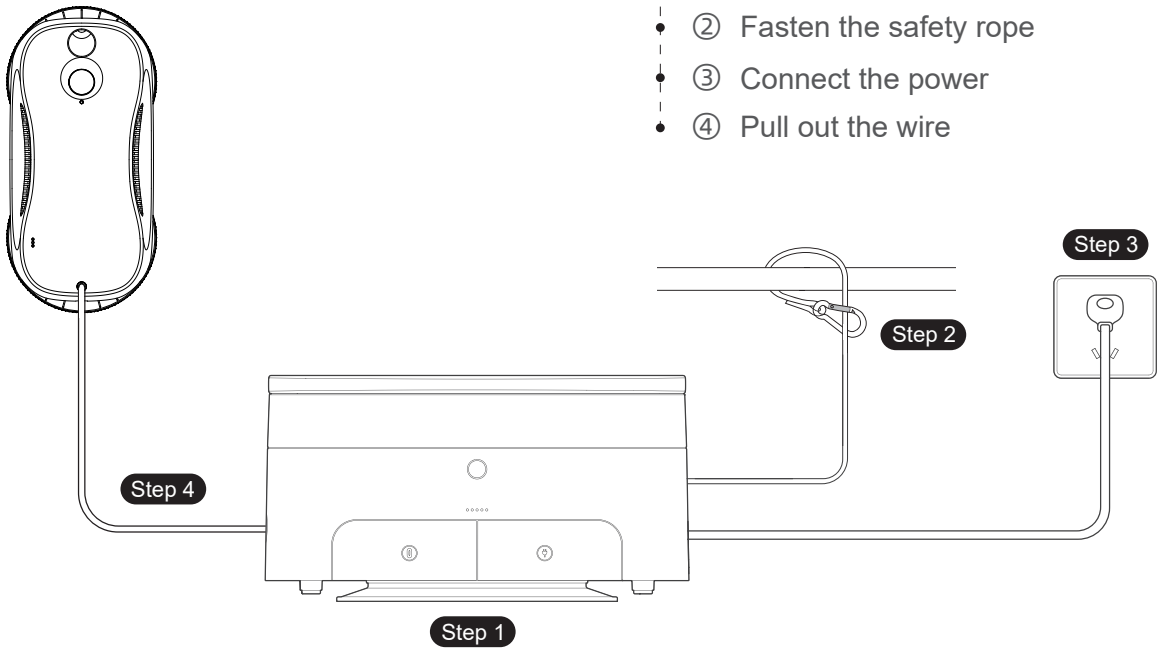

*Do not disconnect the power when the device is running; If the power is off during operation, the device needs to be removed in time, otherwise there is a risk of falling.

INSTALLATION INTRUCTIONS

Cover each mop holder with a mop.

If there are sand and dust on the glass surface, it is recommended to clean it manually first to avoid scratching the glass when the robot is working. If manual cleaning is not possible, it is recommended to turn off the water spray function and use dry mops to wipe off the sand and dust first.

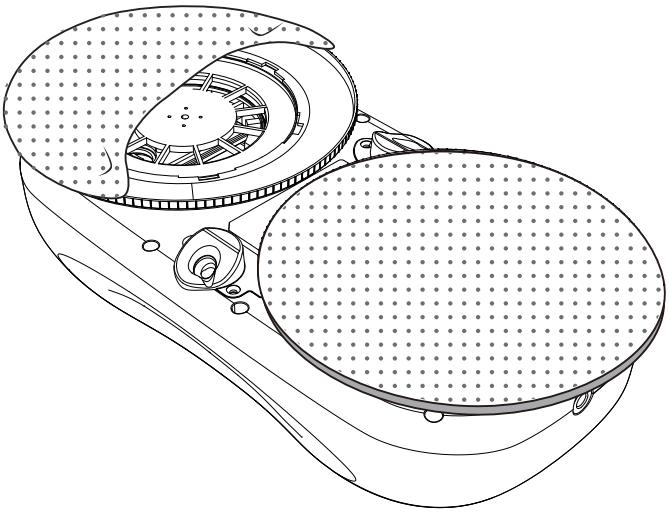

Fill the water tank and cover with the plug

⚠ This product cannot be drenched, dry the surface residual moisture after filling with water. Using concentrated cleaning liquid in this product is strictly prohibited, so as not to block the spray hole and pump.

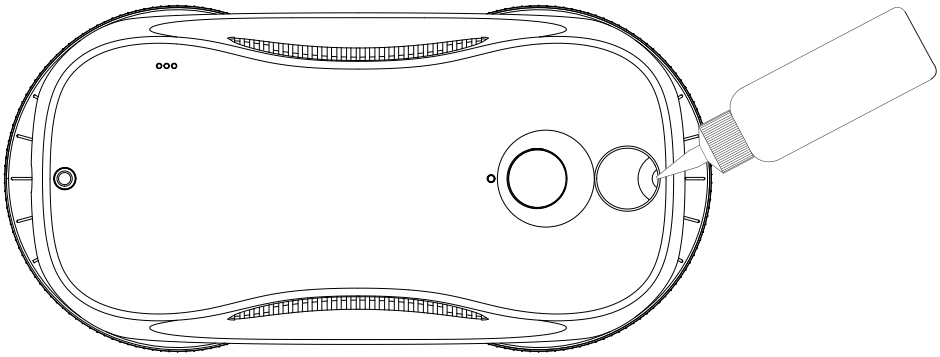

Please make sure the Mop Holder is installed inproper position before use

After the holder is installed, please observe from sideways 360° to ensure that each snap is stuck in place to avoid air leakage.

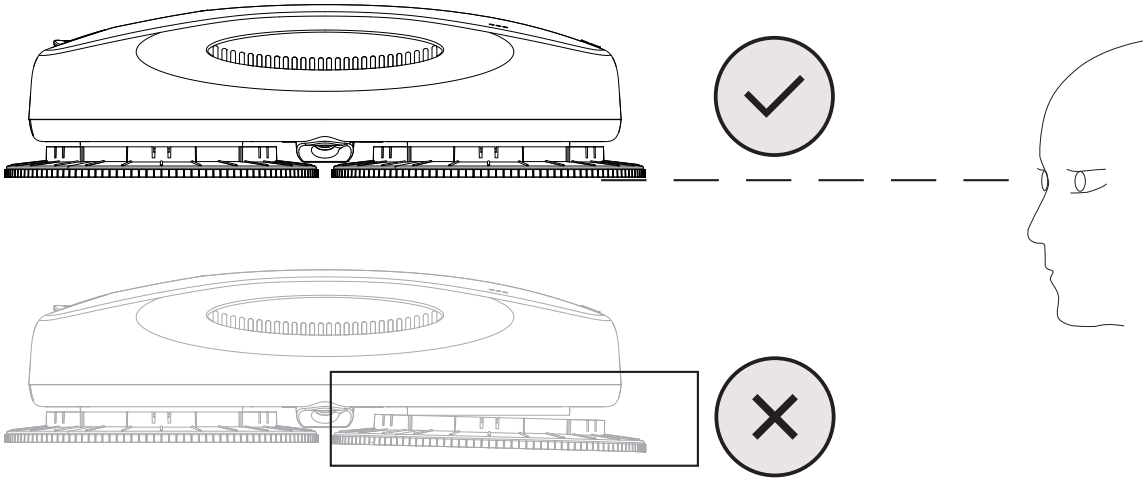

Long-press the power button (more than 3 seconds), and the robot will turn on. After the fan is running, attach the robot on the glass at a location far away from the window frame.

If the robot can't suck on glass, please check whether the holder has buckled up to cause air leakage.

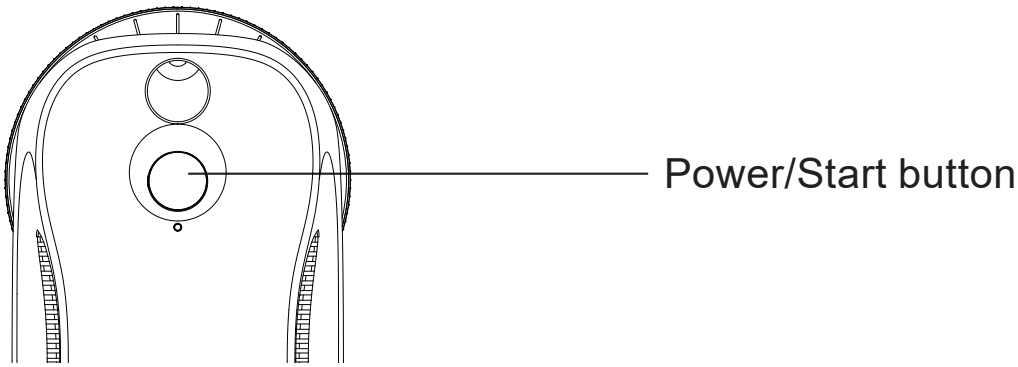

INSTRUCTION AND CAUTIONS

• Safety Rope

Check whether the safety rope is intact and is on a stable object.

• Working Environment Inspection

Ensure the glass surface is dry, please do not use it when it is raining or when the glass surface is foggy.
Do not use on broken and cracked glass.
If outside working at height is required, ground safety warnings must be set up to prevent accidental personal injury.
The robot cannot be used when there are stickers or oil on the glass surface, to avoid robot slipping and falling from glass.

• Wet and Dry Wipe

If there are sand and dust on the glass surface, it is recommended to clean it manually first to avoid scratching the glass when the robot is working. If manual cleaning is not possible, it is recommended to turn off the water spray function and use dry mops to wipe off the sand and dust first.
If there are only dirt stains, it can be wiped directly with the water spray (default turn on water spray).
If there is slipping and twisting when the robot climbing, please install a dry wipe and turn on the water spray.
If there are small areas of stubborn stains, you can use "spot cleaning" and turn on the water spray.
If the robot has serious shaking or rattling, please install a dry wipe cloth.

• Start

① Ensure the power cord and plug are completely connected.
② Long press the Start /Power button (more than 3 seconds) the robot will turn on. After the fan is running, attach the robot on the glass to a location far away from the window frame.
③ Ensure the robot has been stuck to the glass and then let go.
④ Short press the power button to start the robot.

• Remove Robot from Glass

① When the robot is running, hold the safety cable with one hand, short press to stop the robot and take it down with the other hand.
② If you cannot reach the robot, and do not have the remote control on hand, please stay close to the glass to drag the power cord , and slowly pull the robot back to the location reachable by hand, then remove the robot from the glass after powering off.
③ After completely taking down the robot, long-press the power button (more than 3 seconds) to turn it off.

• Power Outage Protection

① This robot is equipped with an internal battery, which can hold on the robot for twenty minutes in case the robot is accidentally removed from the power cord and it will raise an audible and visual alarm. Please take down the robot as soon as possible.
② When the light indicator is red before turning on the device, it means the internal battery is too low to start the robot. Please, keep the robot connected to the electricity to charge it until the red lamp is off.

PATH PLANNING

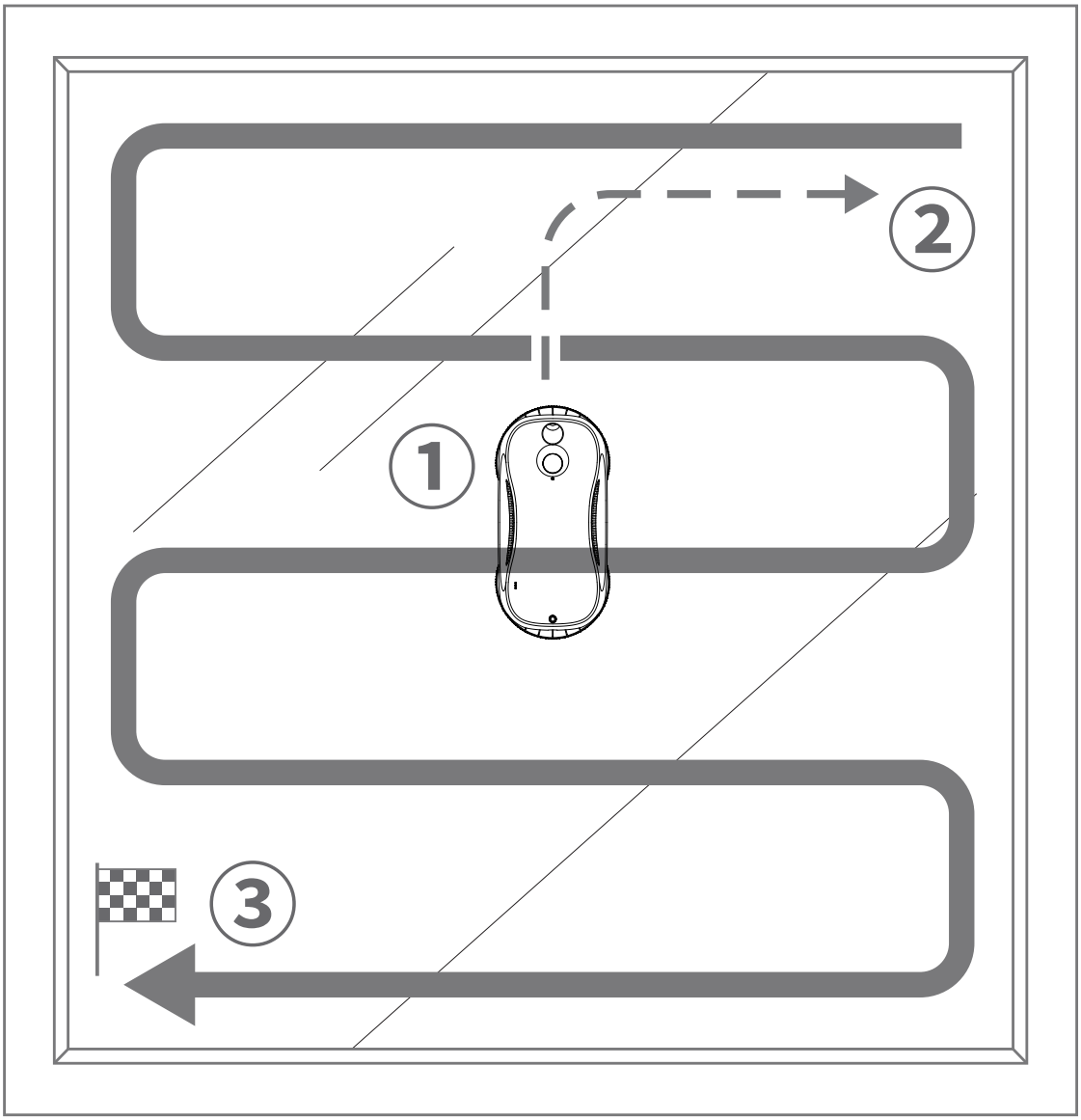

① Put the windows cleaner in the centre of the glass far away from the window frame. Long press the Power/Start button to turn the robot on, and then short press the button to start it. The robot will automatically move upward, then move right. At last, it will reach the top right corner of the glass.

② After the robot has reached the top right corner; it will start to clean the glass by drawing an S-shaped curve from top to bottom. If the robot's water spray function is turned on, when the robot works forward to the right, the right nozzle sprays water and the left nozzle does not spray water. When the robot works forward to the left, the left nozzle spray water, and the right nozzle does not spray water.

③ After completing the cleaning, the robot will stop at the lower-left or right corner according to the glass shape.

SPOT CLEANING ROUTE

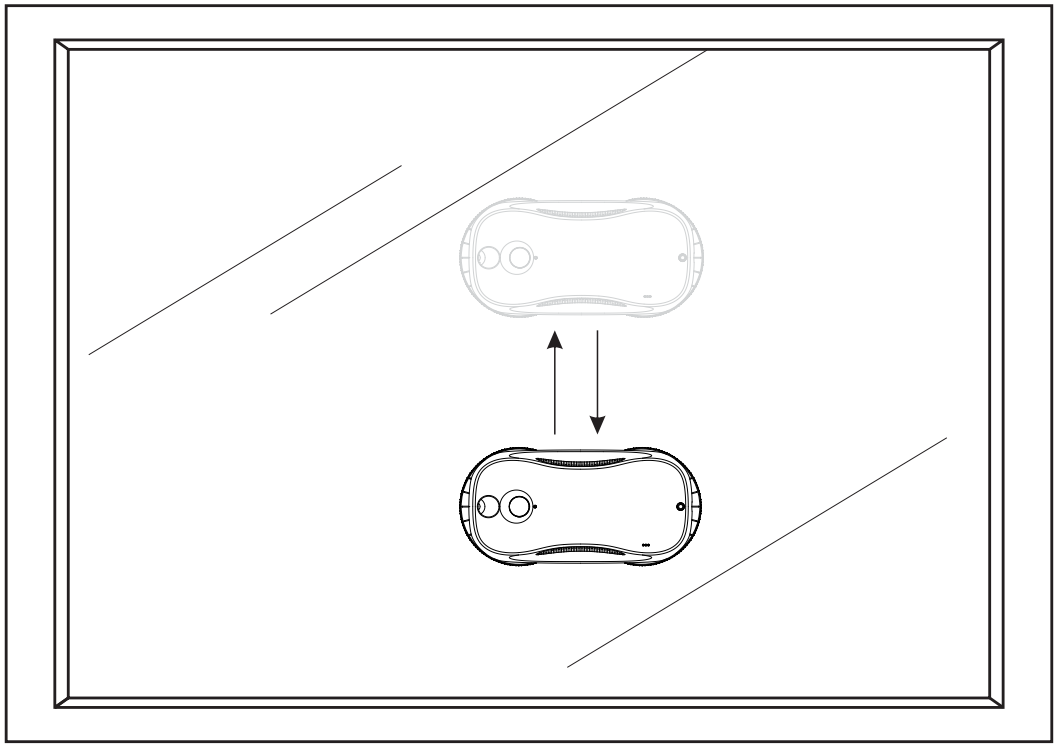

Spot Wiping:

In the user specified area range, the robot will start up and down cleaning at Spot Cleaning.

MEANINGS OF LED INDICATOR LAMP AND VOICE

	LED Indicator	Means
Status Indicator	Green Light	Working normal.
	Green Light + 6 times Beep	Window cleaning is complete.
Charging indicator	Red Light	The built-in battery power is insufficient, please charge 15 minutes above to turn on the robot.
Status Indicator	Red Flashing	The robot is disconnected; please connect the power supply or remove the robot from glass. Insufficient suction power; please check if the robot is air leaking. Friction with the glass is too large or too small, replace the wipe cloth accordingly.
	Red and Green Alternation	Robot error, please contact customer service staff.
Base station indicator	blue indicator	The robot is connected the power. The blue indicator is always on to indicate that the power is on.

REMOTE CONTROL

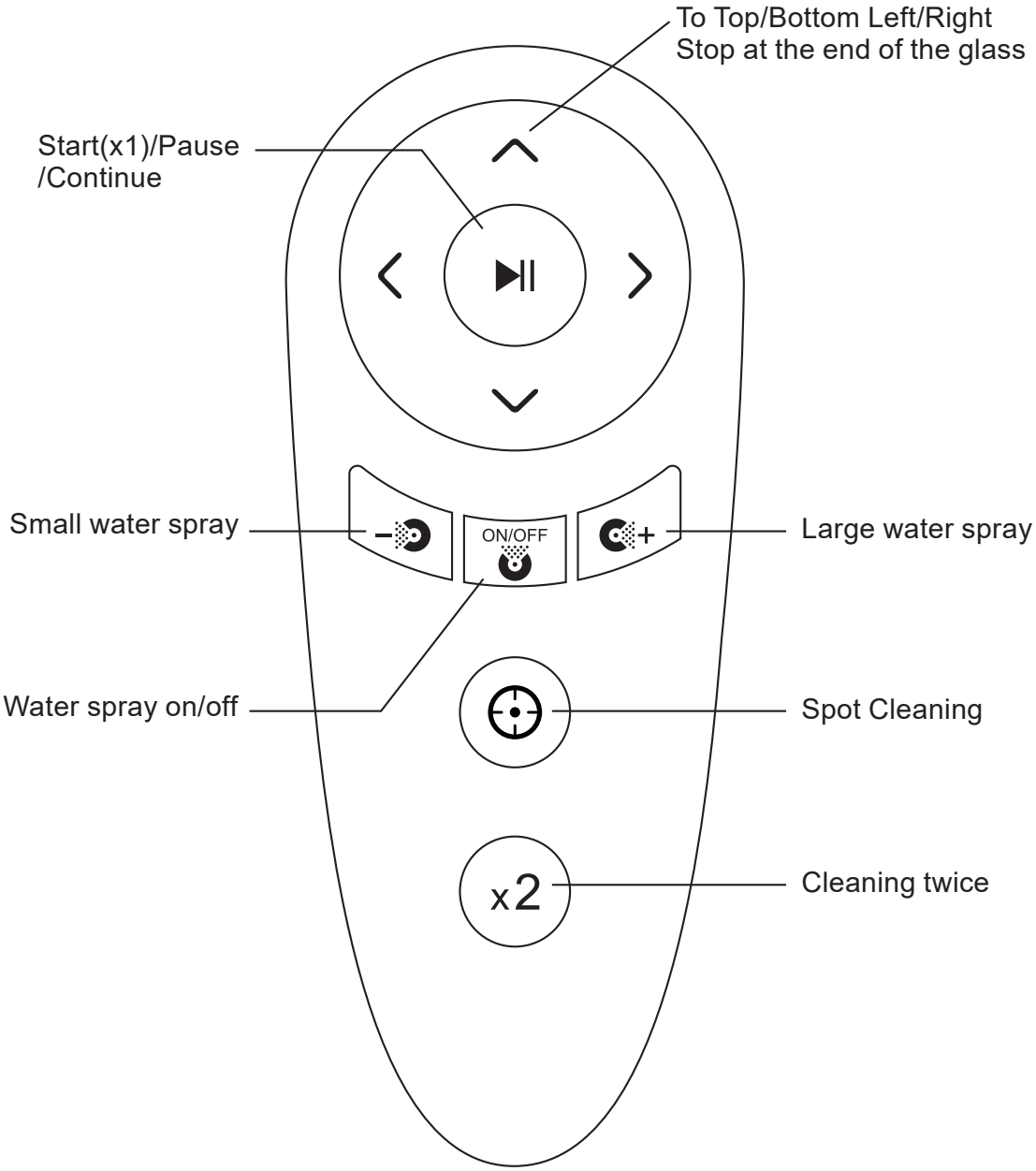

To prevent misuse by children, please press pause button between commands via remote controller. Otherwise, the controller commands button is invalid

PARAMETERS

Model:	SATUO S9 Pro
Voltage:	24V
Watt:	72W
Decibels:	≈70db
Size:	392*263*223mm
Charging Current:	300mA
Capacity	500mAh
UPS Battery Using Time	Approx 25 mins (the remaining power of Built-In Battery will affect the time)
Suction Power	2000-3000pa
Minimum Using area	300*300mm

WATER TANK MAINTENANCE

① Please Ensure water or solution do not spill out of the water tank. If accidentally spilled, please dry immediately to avoid causing water damage to the robot.

② When the robot is not in use, please Ensure there is no residual liquid in the water tank. If you use solution for cleaning, it is recommended to pour out the solution and then fill with a little fresh water to clean the water tank, and do not left any water in the tank.

⚠ **Ensure there is not impurities in the added solution to avoid blocking the nozzle and pump.**

① When the error indicator is flashing red with continuous and short sounds, please inspect if:

- The plug of the power cord is loosened or damaged and results in power off or poor contact.
- The glass or mop is too wet and results in too low friction.
- The glass has impurities attached and results in too high friction.
- The mop holder is incorrectly installed and results in air leakage.
- The glass surface has sticky objects causing too much friction on the wipe
- The suction port is blocked.

② The error indicator is flashing red and green alternately with alarming sound. It means trouble occurs on the inside hardware of the robot, please contact the customer service directly.
On the condition of special glass, when cleaning the bottom of glass, it needs more time for cleaning up, please use remote control.

③ In the case of the robot can't walk freely, please change the mop or inspect the screws on the cleaning roller, ensure they are not loosened.

④ If the robot mop holder shakes too strong when the robot is working, please check if the wipe cloth is too wet, and replace with a dry cloth.

⑤ There will be a little delayed water spraying when the robot start to work, this is a normal phenomenon.

⑥ After cleaning, there's residual round marks on the glass surface, please change a new mop.

⑦ After completing the whole process of cleaning, the robot continues to move and doesn't stop automatically, press the Pause Button and take it down.

⑧ When it is in use, maybe bug occurs occasionally, please restart the robot as the solution.

⑨ If there is a downward sliding when the robot is working, please inspect if:

- The cloth is too wet or too dirty.
- The robot cannot resume work after a while, replace it with a dry and clean wipe cloth.
- The cloth is too dry to cause slips, turn on the water spray function to moisten the wipe cloth, then the robot can resume work.

⑩ Cause of Air Leakage,please inspect if:

- The mop holder is installed correctly.
- The wipe cloth installation for flatness.
- The surface of the glass or other targeted surface are curved or covered with an uneven-surfaces such as stickers.
- The robot goes to the window frame, the mop holder will be warped to produce a wide range of air leakage.

SAFETY

Usage requirements:

① Make sure the safety rope is not broken, and fixed in an immovable object when use the robot. When need to work at height outside, you must set up a ground safety warning to prevent falling accidental personal injury.

② Do not drenched with water. Do not use in the rain or glass humid and foggy.

③ Do not use on cracked and broken glass, confirm that the window area is larger than 30*30cm (height) before use, Please check if the glass with super narrow frame, beveled frame, beveled glass, no frame or glass glue with uneven, raised, leaking seams, gaps and other abnormal situation, use the remote control to control the robot if necessary.

* Not recommended or need to be guarded to use on above situation, abnormal used environment may cause a fall.

④ Be sure to turn off the robot when cleaning the surface of the robot to avoid danger during the movement of the robot.

⑤ Please place the robot and accessories out of the reach of children and forbid children to operate this product. When the robot is working, it is strictly prohibited for fingers and any part of the body to touch this product.

⑥ Please use this product following the instructions, please contact customer service if you can not troubleshoot. Do not repair by yourself to avoid danger.

⑦ Only for 32°F~108°F (0°C ~ 40°C) home environment temperature, when the temperature is lower, it is recommended to use anti-freeze glass water.

⑧ The storage environment should be dry, avoid direct light, please do not store the robot with oil, gas, flammable items.

Battery&Charging:

① Do not use third-party adapter and do not disassemble and modify the robot, battery and adapter.

② Do not continue to use the charger if it is damaged or broken, please contact customer service.

③ Place the adapter away from heat sources.

④ If the product is to be shipped, it is recommended that in its original packaging with the robot turned off.

⑤ If you do not use the product for a long time, please fully charge and shut down the robot and placed in a cool, dry place. At least every 3 months to charge once to avoid the battery over discharge and shortage the battery lifetime.

WARRANTY

Dual Direction Water Spray Window Cleaning Robot

Parts	Warranty content	Period of Warranty
Robot	Robot	1Year
Accessory	Motor / Fan / Charging Adapter / Built−in Li Battery / Remote Control	1Year
Consumables	Wipes / Remote Control / Batteries / Spray Cans or Bottles	/

No warranty on consumable accessories!
Products need to be transported in original boxes to ensure the product safety. It is recommended to keep the boxes for at least 30 days after receiving!

Non-Warranty Claim

① Unauthorized repair, misuse, collision, negligence, abuse, fluid ingress, accident, alteration, etc.
② Incorrect use of Non-Standard accessories or tearing, alteration of labels or Anti-counterfeit labels.
③ Exceed the Warranty service period.
④ Non-compliance with performance failures.
⑤ Because of human causes of this product failure and accessories damage.
⑥ Damage caused by force majeure.
⑦ No valid purchase date record.

FAULT LIST

Parts	Fault contents
Robot	Can’t start when the power is on The remote control can’t be controlled
Adapter	Cannot properly power the robot

CUSTOMER INFORMATION

USER NAME:

TEL:

ADDRESS:

PRODUCT NAME/MODEL NUMBER:

PURCHASE DATE:

Confirmation of purchase date with valid purchase date information
(e.g. purchase receipt, purchase invoice, screenshot of purchase order, etc.)

MAINTENANCE RECORDS

Maintenance Date	Fault description and replacement parts	Maintenance Center	Maintenance Engineer

The contents of this material have been carefully checked, and we reserve the right to interpret any printing errors or misunderstandings in the contents.

NOTE: This equipment has been tested and found to comply with the limits for a Class B digital device, pursuant to part 15 of the FCC Rules. These limits are designed to provide reasonable protection against harmful interference in a residential installation. This equipment generates, uses and can radiate radio frequency energy and, if not installed and used in accordance with the instructions, may cause harmful interference to radio communications. However, there is no guarantee that interference will not occur in a particular installation. If this equipment does cause harmful interference to radio or television reception, which can be determined by turning the equipment off and on, the user is encouraged to try to correct the interference by one or more of the following measures:

- Reorient or relocate the receiving antenna.
- Increase the separation between the equipment and receiver.
-Connect the equipment into an outlet on a circuit different from that to which the receiver is connected.
-Consult the dealer or an experienced radio/TV technician for help.

Changes or modifications not expressly approved by the party responsible for compliance could void the user's authority to operate the equipment.

This device complies with Part 15 of the FCC Rules. Operation is subject to the following two conditions:
(1) this device may not cause harmful interference, and (2) this device must accept any interference received, including interference that may cause undesired operation.

FCC RF Exposure Warning Statements:
This equipment complies with FCC radiation exposure limits set forth for an uncontrolled environment. This equipment shall be installed and operated with minimum distance 20cm between the radiator & body.