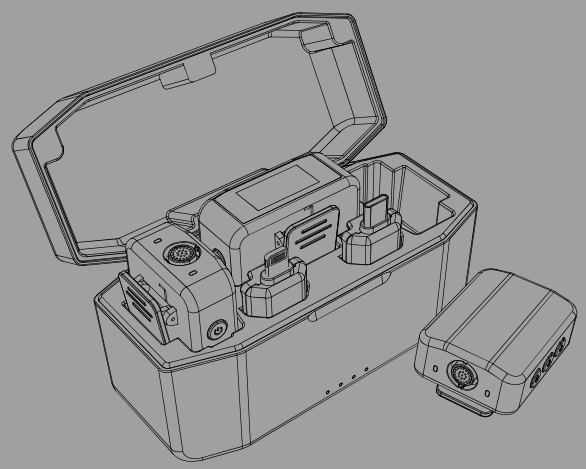

# 2.4G Wireless Microphone Instruction Manual

## FEATURES

• Professional wireless microphone solution, the system includes two transmitters, a dual channel receiver, a charging case, Type-c and Lightning adapter, especially suitable for live stream, interview, video, VLOG and teaching etc..

• The transmitter and receiver have been paired at the factory, and can be used directly without setting.

• 2.4G wireless communication protocol is adopted, which is highly sensitive, low delay and long transmission distance. Sound can also be transmitted stably in noisy environments.

• Both the weight of transmitter and receiver less than 30g, which is convenient to carry and very easy to install; The back clip design can easily fix the transmitter on the clothes, and also can stably install the receiver on the camera.

• The transmitter with a built-in high-quality omnidirectional radio microphone supports the recording modes of mono, stereo and safe audio tracks to achieve high fidelity and professional sound recording.

Built in intelligent DSP noise reduction algorithm to identify and filter environmental noise, making the voice more clear.

• The receiver has excellent compatibility, supporting the connection of mainstream mobile phones, various cameras and computers through the expansion interface.

• The receiver is equipped with a color touch screen, which can visually view the real-time status of the device.

• The recording process can monitor the recording effect in real time, and timely adjustment.

• Intelligent power saving. The transmitter and receiver will automatically shut down if there is no pairing for more than 5 minutes.

• The charging case can store the receiver and two transmitters, and the magnetic structure ensures its stable charging.

• When the battery is full, the working hour of the transmitter can reach 8 hours, and the receiver can reach 3 hours. When used with the charging case, the battery life of the transmitter and receiver can be extended to 16 hours.

• With a carrying bag, it is easy to hold the whole set of equipment and accessories.



## WARNING

1. Please use this product after it is fully charged for the first time.
2. If the product is not used for a long time (more than 60 days), it needs to be charged.
3. Do not disassemble the machine, otherwise it may cause damage for the product.
4. Do not use this product in thunderstorm weather.
5. To ensure personal safety, do not use it during driving.

## CHARGING CASE

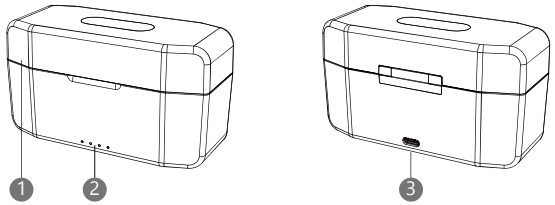


**1. Magnetic Flip Cover :** Close the cover, the transmitters and receivers in the charging case are turned off. After 30 seconds, the battery indicator turns off. When the cover is opened, the transmitters and receiver in the charging case are automatically turned on, and the battery indicator lights up.

**2. Battery Indicator :**

| | | | |
|---|---|---|---|
| ●●●● | >76% | ●●●○ | 51%~75% |
| ●●○○ | 26%~50% | ●○○○ | ≤25% |
| ◐○○○ | <10% indicator flashes | ○◍●● | When charging,breathing light. |

**3.Type-C Jack :** The charging case support the use of a charger with an output of 5V/2A. When fully charged, the indicator light turns off.



## TRANSMITTER

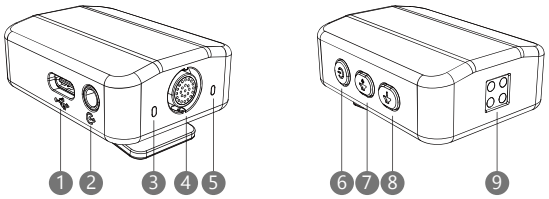


**1. USB Type-C :** Charging interface.

**2. 3.5mm Monitoring Jack :** It is used for external microphones that do not require separate power supply. After the external microphone is connected, the built-in microphone stops collecting sound.

**3. Battery Indicator :** The indicator is always on when the power is ≥ 20%. The indicator flashes when the power is less than 20%. It is the effect of breathing lamp when charging. After the TX is turned on, the indicator flashes quickly and then automatically shuts down, indicating that it needs to be charged immediately.

**4. Built in Microphone :** Used to collect sound.

**5. Signal indicator :** A flashing blue light indicates that pairing is in progress, and a steady blue light indicates that pairing is successful. When the receiver turns on mute, the red light is always on.

**6. Power Button :** Press and hold to turn on or off. Short click to turn on mute.

**7. Volume+ :** Increase the volume.

**8. Volume- :** Decrease the volume.

**9. Charging Contact :** Put it into the charging case to start charging.



## RECEIVER

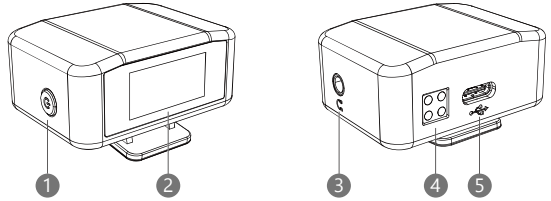


**1. Power Button :** Press and hold to turn on or off. Short click to lock/unlock the screen.

**2. Color Touch Screen :** Real time display of power, volume, signal strength, sound channel and other status information of receiver and transmitter. Slide up to enter the system setting menu.

**3. 3.5mm TRS Monitoring :** Plug in the headphones, speakers and other devices to monitor collecting sound in real time.

**4. Charging Contact :** Put it into the charging chamber to start charging.

**5. USB Type-C :** Charging/data port. After connecting the mobile phone through the adapter, 3.5mm TRS Monitoring stops outputting sound.

## RECEIVER SOFTWARE

( RX=Receiver TX= Transmitter )

**1. Mainmenu**

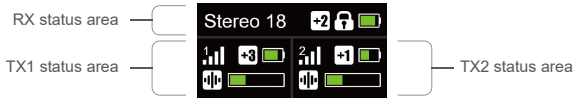




RX status area:

| | | | |
|---|---|---|---|
| Stereo | Audio channel information. | 18 | RX volume. |
| +2 | RX input gain. | | Screen is locked and cannot be operated. |
| | RX power and charging status display. | | |

TX status area ( TX status area does not display content when not successfully paired with receiver ) :

| | | | |
|---|---|---|---|
| | Signal strength between TX 1 and RX. | | Noise reduction is on. |
| | TX power and charging status display. | | The TX is muted. |
| | Normal recording. | | Displays the voice strength. |
| +3 | TX Volume gain. | | |

**2. RX Menu**

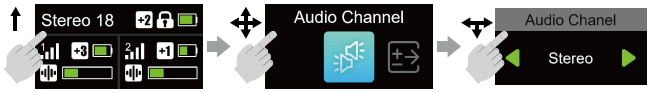


Swipe down on the home page to enter the receiver submenu.
Swipe left and right on the submenu page to select the setting item, and swipe up again to enter the setting page.
Swipe down to return to the previous menu.

**3. RX Settings**

Channel settings
Stereo (two TX correspond to the left and right channels of the receiver), Mono (the sound of the left and right channels of the receiver is the same).

Receiver Gain
Set the receiver's output volume boost.

Receiver volume
Set the output volume of the receiver.

Brightness setting
Set the brightness of the display.

System language selection
Set menu display language

Factory Settings
Restore the default settings of the system.

System Information
Display system software and hardware version information.

Authentication Information
Display the authentication information of the device.

**4. TX Menu**

After the TX and RX are successfully paired, swipe right on the home page to enter the TX1 submenu, and swipe left to enter the TX2 submenu.
Swipe left and right on the submenu page to select the setting item, and swipe up again to enter the setting page. Swipe down to return to the previous menu.

**5. TX Setting**

Microphone noise reduction settings
Turn noise reduction on or off.



**6. Charging Display Page**

When the TX and RX are put into the charging case at the same time to start charging, the receiver screen will display as following picture.

Receiver battery information is not displayed when the receiver is not paired.

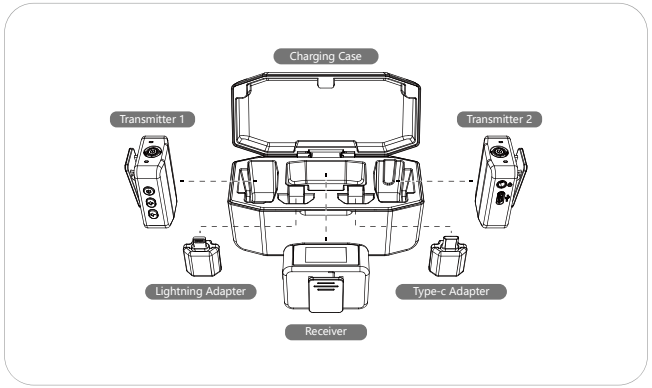




## APPLICATION

1. TX
The TX can be clipped directly to clothing.

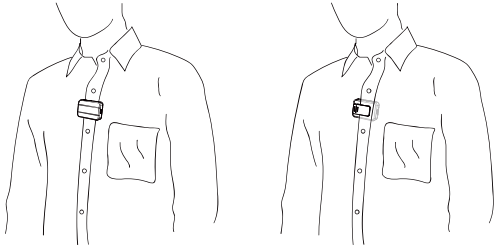

**2. Furry windshield**
Use furry windshield outdoor or windy day, which can make the sound clearer.

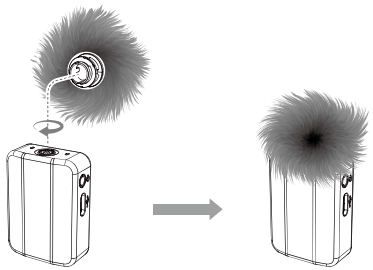



**3. The RX connected to smart phone.**
The RX can be connected to a mobile phone via and adapter. When using the phone to shoot video, the sound of transmitter is synchronously transmitted to the phone.

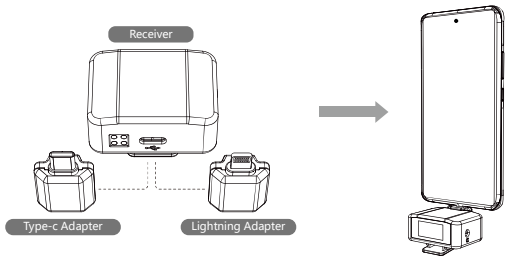


**4. The RX connected to camera.**

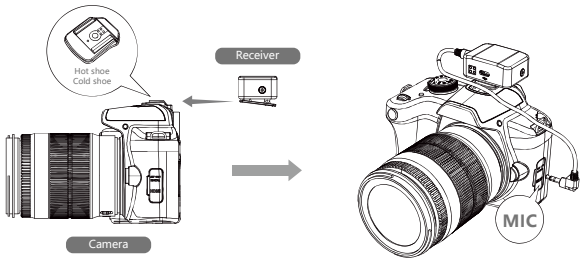




## PACKING LIST

Charging Case

Transmitter x2

Receiver

Type-C Adapter

Lightning Adapter

Furry windshield x2

Smartphone Audio Cable

Camera Audio Cable

Charging Cable

Manual

Carrying Pouch



## PARAMETER

| | Transmitter | Receiver | Charging Case |
|---|---|---|---|
| Size | 46.8*34.5*22.4 mm | 47*34*26.4 mm | 114*63.1*50 mm |
| Weight | 23g | 27g | 171g |
| Wireless mode | GFSK 1 Mbps & 2 Mbps | GFSK 1 Mbps & 2 Mbps | / |
| EIRP | <20 dBm | <20 dBm | / |
| Operating frequency | 2400-2483.5 MHz | 2400-2483.5 MHz | / |
| Battery type | LiPo 1S | LiPo 1S | Lipo 1s |
| Battery capacity | 250mAh | 300 mAh | 1800 mAh |
| Battery energy | 0.93 Wh | 1.11 Wh | 6.7 Wh |
| Battery voltage | 3.7V | 3.7V | 3.7V |
| Charging ambient temperature | 0°C~ 45°C | 0°C~ 45°C | 0°C~ 45°C |
| Operating ambient temperature | -20°C~ 45°C | -20°C~ 45°C | -20°C~ 45°C |
| Communication distance | 100M+ | 100M+ | / |
| Charging time | 1.3H | 1.5H | 3H |
| Working hours | 8H | 3H | 2.2 Times |
| Microphone directivity | Omnidirectional | / | / |
| Frequency response | Low Cut Off:50 Hz-20 KHz<br>Low Cut On:200 Hz-20KHz | / | / |
| Maximum sound pressure level | 120 dB SPL | / | / |
| Maximum input level (3.5 mm) | -17 dBV (THD < 0.1%) | / | / |
| Equivalent noise | 23 dBA | / | / |
| Monitor interface output power | 30 mW@1kHz，32Ω | / | / |

## CERTIFICATION

Made in China

This device complies with Part 15 of the FCC Rules. Operation is subject to the following two conditions: (1) this device may not cause harmful interference, and (2) this device must accept any interference received, including interference that may cause undesired operation

NOTE: This equipment has been tested and found to comply with the limits for a Class B digital device, pursuant to Part 15 of the FCC Rules. These limits are designed to provide reasonable protection against harmful interference in a residential installation. This equipment generates, uses and can radiate radio frequency energy and, if not installed and used in accordance with the instructions, may cause harmful interference to radio communications. However, there is no guarantee that interference will not occur in a particular installation.
If this equipment does cause harmful interference to radio or television reception, which can be determined by turning the equipment off and on, the user is encouraged to try to correct the interference by one or more of the following measures:
-- Reorient or relocate the receiving antenna.
-- Increase the separation between the equipment and receiver.
-- Connect the equipment into an outlet on a circuit different from that to which the receiver is connected.
-- Consult the dealer or an experienced radio/TV technician for help.

Warning: changes or modifications not expressly approved by the party responsible for compliance could void the user's authority to operate the equipment

The devices has been evaluated to meet general RF exposure requirement， the device can be used in portable exposure condition without restriction